Section C

Hydraulics

main group	page-n°	date	description
Hydraulics			
	C0010-HIN	01:01:16	HYDRAULICS - CYLINDERS
	C0020-HIN	01:01:16	HYDRAULICS - CYLINDERS
	C0030-HIN	01:01:16	HYDRAULICS - FAROIL CYLINDERS
	C0040-HIN	01:10:19	HYDRAULICS - CYLINDERS (07)
	C0045-HIN	24:03:16	HYDRAULICS - BSP TO ORFS
	C0050-HIN	08:01:18	HYDRAULICS - SB WING FOLD
	C0060-HIN	23:03:16	HYDRAULICS-MB BOOM LIFT CYLNDR
	C0070-HIN	08:01:18	HYDRAULICS-MB BOOM WING TILT
	C0080-HIN	08:01:18	HYDRAULICS-FALCON FOLD 42'-50'
	C0090-HIN	08:01:18	HYDRAULICS-FALCON 42'-50' NN
	C0100-HIN	08:01:18	HYDRAULICS FALCON TILT 42'-50'
	C0110-HIN	08:01:18	HYDRAULICS - GW/HY 40' & 50'
	C0120-HIN	08:01:18	HYDRAULICS - 3PT EAGLE HY
	C0130-HIN	08:01:18	HYDRAULICS - 3PT EAGLE HT
	C0140-HIN	08:01:18	HYDRAULICS - 3PT EAGLE HZ
	C0150-HIN	28:09:17	HYDRAULICS - DELTA 3PT SPC HY
	C0160-HIN	28:09:17	HYDRAULICS - DELTA 3PT SPC HZ
	C0170-HIN	08:01:18	HYDRAULICS - EAGLE HY 45'-66'
	C0180-HIN	08:01:18	HYDRAULICS-EAGLE HY 45'-66'NN
	C0190-HIN	08:10:18	HYDRAULICS-EAG.HY 45-66'RANGER
	C0200-HIN	08:01:18	HYDRAULICS-EAG.HY RANGER 2011
	C0210-HIN	13:05:19	HYDRAULICS HZ - RANGER 2000
	C0220-HIN	09:01:18	HYDRAULICS HV/HZ - RANGER 550
	C0230-HIN	25:02:16	HYDRAULICS OPEN CENTER RANGER
	C0240-HIN	09:01:18	HYDRAULICS-EAG HZ 45-66'PRE 95
	C0250-HIN	09:01:18	HYDRAULCS EAG HZ 45-66'POST 95
	C0260-HIN	23:01:18	HYD EAG HZ 45-66' W/DH CONTROL
	C0270-HIN	30:03:16	HYDRAULICS-EAGLE HY 80-90'
	C0280-HIN	29:09:17	HYDRAULCS EAGLE HZ 80-90'PRE95
	C0290-HIN	29:09:17	HYD EAGLE HZ 80-90' W/JOYSTICK
	C0300-HIN	23:01:18	HYD EAGLE HZ 80-90' W/ DH
	C0310-HIN	16:04:20	HYDRAULICS EAGLE/FORCE DH
	C0320-HIN	30:03:16	HYD EAGLE HZ JOYSTICK CONTROL
	C0330-HIN	30:03:16	STEERABLE DRAWBAR CM PLUS
	C0340-HIN	13:05:19	HYD EAGLE HZ JOYSTICK 2005
	C0350-HIN	09:01:18	HYD EAGLE HZ SPB 45'-66' - CM
	C0360-HIN	09:01:18	HYD EAGLE HZ SPB 45'-66' - NAV
	C0370-HIN	08:10:18	HYD EAGLE HZ SPB 45-66' RANGER
	C0380-HIN	29:09:17	HYD EAGLE HZ SPB 80'-90' - CM
	C0390-HIN	29:09:17	HYD EAGLE SPC HY 80'-100'
	C0400-HIN	29:09:17	HYD EAGLE SPC HZ 80'-100'
	C0410-HIN	16:11:17	HYD FORCE 110'
	C0420-HIN	08:10:18	HYD FORCE 80'-90'
	C0430-HIN	08:10:18	HYD FORCE 100'-120'
	C0440-HIN	01:01:16	HYD TWIN FORCE ELECTRICAL
	C0450-HIN	30:03:16	HYD TWIN SOLENOID VALVE
	C0460-HIN	01:01:16	DAH VALVES (COMATROL) '9
	C0465-HIN	30:11:17	HYD TWIN FORCE 60'-66' HAZ
	C0470-HIN	17:11:17	HYD TWIN FORCE 80'-90' HAZ
	C0480-HIN	17:11:17	HYD TWIN FORCE CM+ 80'-90' HAZ
	C0490-HIN	17:11:17	HYD TWIN FORCE NCM 118' HAZ
	C0500-HIN	30:03:16	HYD TWIN FORCE FAN HAZ
	C0510-HIN	30:03:16	HYD TWIN FORCE HYD PUMP CM HAZ
	C0520-HIN	30:03:16	HYD TWIN FORCE HYD PUMP CM+HAZ
	C0530-HIN	30:03:16	HYD TWIN FORCE PUMP/TANK - NCM
	C0540-HIN	30:03:16	HYD - 2 ROW GRAPE B20 HY
	C0550-HIN	30:03:16	HYD - LIFT B20/B40 H

main group	page-n°	date	description
	C0560-HIN	30:03:16	HYD - 2 ROW GRAPE B40 HZ
	C0570-HIN	13:05:19	HYD.BLOCK EAGLE/FORCE PRE 2012
	C0580-HIN	01:01:16	CETOP VALVES
	C0590-HIN	13:05:19	HYD.BLOCK EAGLE/FORCE 2012
	C0600-HIN	13:05:19	HYD. BLOCK TERRA FORCE
	C0610-HIN	13:05:19	BASIC HYDRAULICS NCM 4400/6600
	C0615-HIN	03:07:19	BASIC HYDRAULICS CM 4500/5500/7000/8500/10000
	C0620-HIN	14:05:19	BASIC HYDRAULICS NCM 9000
	C0630-HIN	14:05:19	TRACK HYDRAULICS NCM 4400/6600
	C0640-HIN	22:08:17	HYD EAGLE HZ SPC 80'-100'
	C0650-HIN	17:11:17	HYDRAULICS FORCE 80'-100' (PRE '06)
	C0651-HIN	09:01:18	HYDRAULICS FORCE 80'-100' (POST '06)
	C0660-HIN	17:11:17	HYDRAULICS FORCE 120'-132' (PRE '06)
	C0661-HIN	18:08:17	HYDRAULICS FORCE 120'-132' (POST '06)
	C0670-HIN	26:02:16	HYDRAULICS HY - NAV 3000/4000
	C0680-HIN	15:07:19	HYDRAULICS HZ - NAV 3000/4000
	C0685-HIN	11:07:19	BASIC HYDRAULICS NAV 4500/6200
	C0690-HIN	09:01:18	HYD EAGLE HZ SPB 45'-66'
	C0700-HIN	10:01:18	HYD EAGLE HY SPB 45'-66'
	C0710-HIN	27:09:17	HYD EAGLE HY SPC 80'-100'
	C0720-HIN	07:02:18	ACCUMULATOR
	C0730-HIN	16:07:19	HYDRAULICS TDZ BOOM (A)
	C0740-HIN	01:01:16	HYDRAULICS TDZ BOOM (B)
	C0750-HIN	01:01:16	HYDRAULICS TDZ BOOM (C)
	C0760-HIN	11:10:17	HYD EAG. HZ SPC 90/60'DUALFOLD
	C0770-HIN	08:05:19	HYD EAG.HZ SPC 120/90'DUALFOLD
	C0780-HIN	14:05:19	HYD PARALIFT SARITOR
	C0790-HIN	27:07:16	HYD. FLOW REG. BLOCK PRESIDIO
	C0800-HIN	03:06:19	HYD. LIFT BLOCK PRESIDIO
	C0810-HIN	08:09:16	BOOM HYD. CIRCUIT PRESIDIO
	C0820-HIN	14:05:19	HYD. PARALIFT HAZ ALPHA
	C0830-HIN	01:05:17	HYD.STEERING ALPHA ECODRIVE
	C0840-HIN	05:06:19	DTZ BASIC HYDRAULIC
	C0850-HIN	05:06:17	DTZ 3 FOLD HYD.OUTER 120'/132'
	C0860-HIN	06:06:17	DTZ 2 FOLD HYD.OUTER 90'
	C0870-HIN	14:05:19	CM/NAV HYD. PARALIFT
	C0880-HIN	17:08:17	HYD. DRIVE PUMP 464H
	C0890-HIN	06:12:17	HYD.LEG WIDENING 2017
	C0900-HIN	21:02:19	HYD. CIRCUIT STEERING - RUBICON
	C0910-HIN	13:05:19	HYDRAULIC SOLENOIDS
	C0920-HIN	05:06:19	HYD. DAMPER, LOCKING CYLINDER
	C0930-HIN	21:08:19	HYD. FOLD CYLINDER TDZ

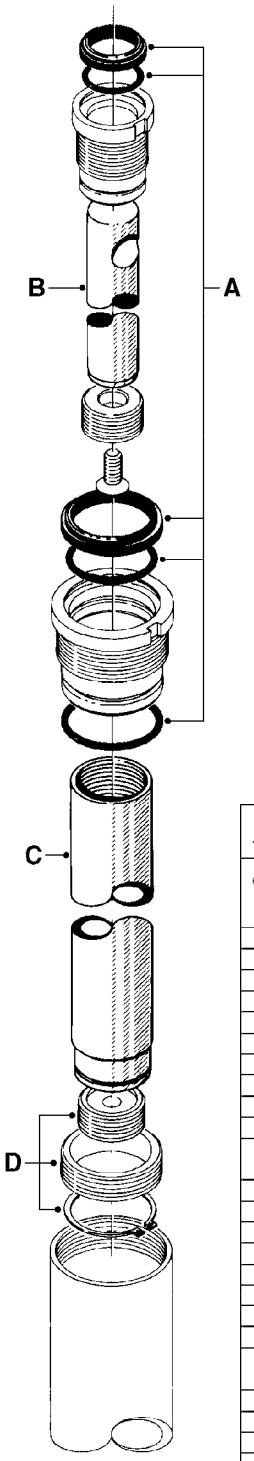

MULTI-STAGE CYLINDER

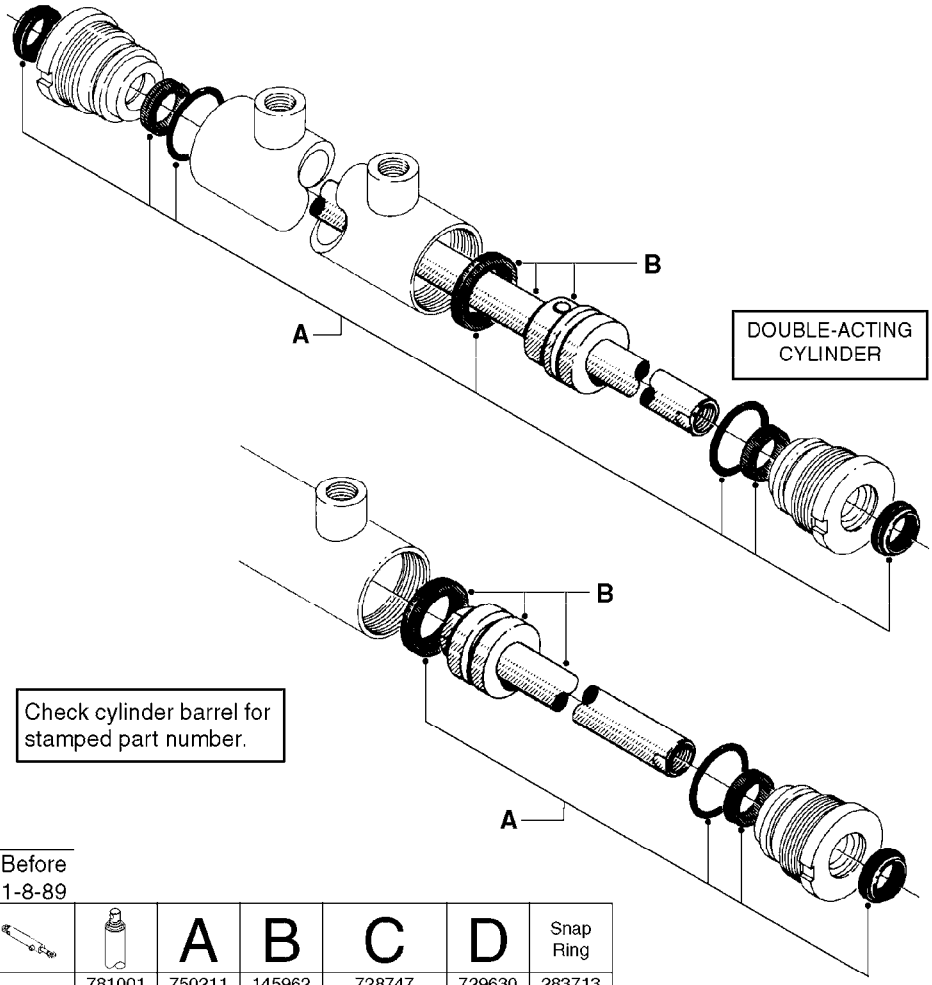

Check cylinder barrel for stamped part number.

After 1-8-89	Before 1-8-89		A	B	C	D	Snap Ring
		781001	750211	145962	728747	729630	283713
781021	781002		750212	726137			
781003	781003		750212	726138			
		781004	750213	145963	728735	729631	283724
781023	781005		750214	726139			
		781006	750211	145964	159165	729632	283713
781023	781007		750214	726139			
781008	781008		750212	726140			
		781010	750211	145964	159166	729632	283713
		781011	755415	729729	729730	729635	283800
		781012	750238	614624	614625-Ø60 614626-Ø80	729633	283843
781013	781013		750239	726141			
781022	781014		750212	726137			
781016			750212	726137			
781020			750252			728688	
		781032	750213	146538	150325	729634	283724
		781034	750211	147076	151291	729630	283713
		781036	755415	615181	615180	729635	283800
		781040	750213	146732	151286	729631	283724
		781042	750254	615248	615249-Ø60 615250-Ø80	729637	283800 283843
781046			750255	730938			
781050			750255	730939			
781056			750255	730939			
781057			750255	730938			
781086			750212	726137			

C0010

HYDRAULICS - CYLINDERS
C0010-HIN, 01:01:16

Date 12.08.2020 11:35

parts-n°	order qty	description
145962	1	VASTAGO PISTON D. 25 X 675
145963	1	PISTON ROD 30 X 768.5
145964	1	PISTON ROD 25 X 575
146538	1	PISTON ROD Ø60/50/30-1700
146732	1	CYLINDER ROD F. 781040 HYD CYL
147076	1	PISTON ROD 25 X 725
150325	1	INTER.SHAFT Ø50/40 L=930
151286	1	INTER. SHAFT F.781040 HYD CYL
151291	1	INTER.SHAFT Ø40/30 L=675.5
159165	1	INTER. SHAFT F. 781006 HYD CYL
159166	1	INTER. SHAFT F.781010 HYD CYL
283713	1	SNAP-RING OUTER 38X1.75
283724	1	SNAP-RING OUTER 48X1.75
283800	1	SNAP-RING 58X2
283843	1	SNAP-RING 78X2.5
614624	1	PISTON ROD D40X865
614625	1	PIPE INTERMEDIA D60X785
614626	1	PIPE INTERMEDIA D80X769
615180	1	INTER.SHAFT Ø60/50 L=918
615181	1	PISTON ROD Ø70/60/40-1687
615248	1	PISTON ROD Ø90/80/60/40-2250
615249	1	PISTON ROD Ø60/50 L=853
615250	1	PISTON ROD Ø80/70 L=829
726137	1	PISTON ROD F.781002 CYLINDER
726138	1	PISTON ROD F.781003 CYLINDER
726139	1	PISTON ROD F/CYLINDER
726140	1	PISTON ROD F.781008 CYLINDER
726141	1	PISTON ROD /PISTON PACKED
728735	1	CYLINDER TUBE W.STOP RING
728688	1	PISTON ROD/PISTON 50/30-300
728747	1	INNER CYL.W.STOP RING 781001
729630	1	PISTON RINGS F.781001,781034
729631	1	PISTON RINGS F.781004,781040
729632	1	PISTON RINGS F.781006,781010
729633	1	PISTON RINGS F.781012
729634	1	PISTON RINGS F.781032
729635	1	PISTON RINGS F.781036
729637	1	PISTON RINGS F.781042
729729	1	PISTON ROD ASSY. 40 x 760MM
729730	1	PISTON ROD W/SEAL & RING
730938	1	PISTON ROD ASSY. F.781046/57
730939	1	PISTON ROD ASSY. F. 781050/56
750211	1	SEAL KIT F/781001 & 781006
750212	1	SEAL KIT F.40/20 CYLINDER
750213	1	SEAL KIT F.60/50/30 CYLINDER
750214	1	SEAL KIT F.HY CYL.
750238	1	PACKING SET FOR HY CYL. 781012
750239	1	PACKING SET FOR HY CYL. 781013
750252	1	SEAL KIT F.HY CYL.781020
750254	1	SEAL KIT F.HY CYL.781042
750255	1	SEAL KIT F.40/22 CYLINDER
755415	1	SEAL KIT F.HY CYL.781011
781001	1	CYL.TELESCOPING Ø50/40/25_1100
781002	1	CYL.DBL D40/20-300 (78122400)
781003	1	CYLINDER DOUBLE D40/20-180
781004	1	CYLINDER DOUB. D70/50/30-1300
781005	1	CYLINDER DOUBLE D50/25-300
781006	1	CYLINDER DOUB.D50/40/25-900
781007	1	CYLINDER LY/TY
781008	1	CYLINDER DOUBLE D40/20-120
781010	1	CYLINDER TELESC.50/40/25-700

parts-n°	order qty	description
781011	1	CYLINDER TELESC.70/60/40
781012	1	CYLINDER TEL.90/80/60/40-2100
781013	1	CYLINDER D40/20X310 THROUGH
781014	1	CYLINDER FOR 45 HY 60 HB TILT
781016	1	CYLINDER DOU.W/SIDE DET.D40/20
781020	1	CYLINDER DOUBLE D50/30-300
781021	1	CYLINDER 40/20 300MM
781022	1	CYLINDER 40/20 300MM
781023	1	CYL DOUB D50/25-300 781116
781032	1	CYLINDER TELESC.60/50/30-1700
781034	1	HY. CYLINDER D50/40/25 - 1200
781036	1	CYLINDER TELESC.70/60/40-1687
781040	1	CYLINDER 60/50/30 1100MM
781042	1	CYLINDER TEL.90/80/60/40-2250
781046	1	CYLINDER D40/22-300
781050	1	CYLINDER D40/22-300 EXT.THREAD
781056	1	CYLINDER 40/22X300MM
781057	1	CYLINDER D40/22X300MM
781086	1	CYLINDER DOUBLE Ø40/20-180

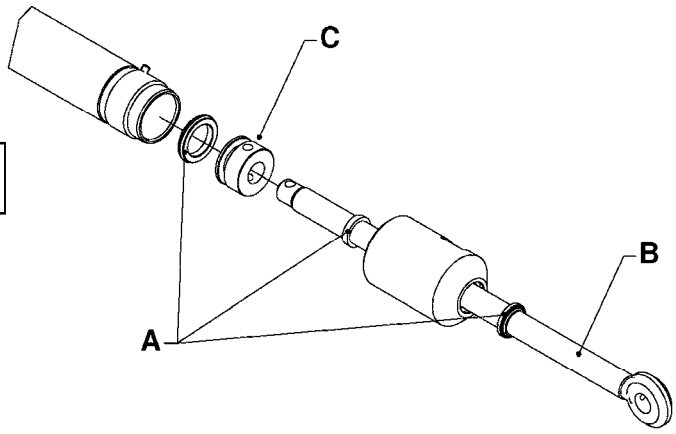

Check cylinder barrel for stamped part number.

		A	B	C
781030		750247	615030	146443
781031		750248	615040	146484
781033		750248	615174	146484
781035		750247	146610	146443
	781038	750247	615210	146443
781039		750250	615656	147254
	781041	750253	615232	146749
	781043	750251	615210	146858
781044		750248	615316	146484
781045		750273	615358	146443
	781047	750251	615363	146858
	781051	750273	615570	146443
781052		750273	147127	146443
781053		750273	147151	146443
781058		750251	615643	146858
781060		750250	615656	147254
781065		750273	147127	146443
781067		755695	147468	147469
781078		750251	615643	146858
781080		750247	147601	146443
781083		755697	616065	147463
781084		750247	616070	146443
781087		750689	147127	146858
781090		750669	61003600	14005600

		A	B	C
781093		750693	14018900	14022200
781096		750691	61025200	14015500
781097		750691	61022800	14015500
781100		750692	14022400	14038500
781107		750713	14028900	14024100
781109		750713	14029100	14024100
781111		750713	14029100	14024100
781113		750714	61028900	14038400
781115		750709	61029200	14029700
781116		750712	14030200	14038400
781118		750710	14030600	14029700
781119		750710	14030700	14029700
781121		750711	14030900	14029700
781122		750711	14030900	14029700
781123		750711	14031100	14029700
781124		750711	14031100	14029700
781126		750710	14036200	
781127		750709	61033600	
781130		750715	61031000	14027500
781132		750668	63039300	
781138		750715	61038000	14027500
781139		750725	615656	
781141		750724	61022800	
78100003		750691	61022800	14008203

HYDRAULICS - CYLINDERS
C0020-HIN, 01:01:16

Date 12.08.2020 11:35

parts-n°	order qty	description
146443	1	HYDR.PISTON D49.8/23.0 L=35
146484	1	HYDR.PISTON D39.8/18.0 L=25
146610	1	PISTON ARM F.CYL Ø50/25-150
146749	1	PISTON RING F.D70/50-700
146858	1	HYDR.PISTON D59.8/23.0 L=35
147127	1	PISTON BAR Ø30,0 - 385MM
147151	1	PISTON BAR D30.0 - 585MM
147254	1	HYDR.PISTON D25/12 L=12
147463	1	PISTON RING F.D70/40
147468	1	ROD CYLINDER F. 781067 HYD CYL
147469	1	PISTON F. 781067 HYD CYL
147601	1	PISTON ARM F. CYL. Ø25 L=348
615030	1	PISTON ARM F.CYL Ø50/25-300
615040	1	PISTON ARM F.CYL Ø40/20-120
615174	1	PISTON ROD F. HY CYLINDER
615210	1	HINGE PIN W.FORK L=1015
615232	1	PISTON ARM F.CYL Ø70/50-700
615316	1	PISTON ARM F. CYL. D40/20-500
615358	1	PISTON ARM F.CYL Ø50/30-500
615363	1	PISTON ARM F.CYL Ø25 L=1315
615570	1	CYLINDER ROD F.HY CYL.781051
615643	1	PISTON BAR 060-25 - 830MM
615656	1	PISTON BAR FOR 025/12-50
616065	1	PISTON ARM F. CYL. Ø40/400
616070	1	PIST ARM Ø50/25L=300alt781113
750247	1	SEAL KIT F.HY CYL.781030/35/38
750248	1	SEAL KIT F.HY CYL.781031/33
750250	1	SEAL KIT F.HY CYL.781039
750251	1	SEAL KIT F.HY CYL.
750253	1	SEAL KIT F.HY CYL.781041
750273	1	GASKET SET F.HY-CYL 781051-52
750668	1	SEAL KIT FOR CYLINDER 781089
750669	1	SEAL KIT F.HY CYL. 781090
750689	1	SEAL KIT F.HY CYL.781087
750691	1	SEAL KIT F HY CYL.781095/96/97
750692	1	SEAL KIT F.HY CYL.781100
750693	1	SEAL KIT F.HY CYL.781093
750709	1	GASKET SET F.781115/25
750710	1	SEAL KIT F.HY CYL.781118/19/20
750711	1	SEAL KIT F.781121/22/23/24
750712	1	SEAL KIT F.781116
750713	1	SEAL KIT F HY CYL.781103/6/7/8
750714	1	SEAL KIT F.HY CYL.781113/14/17
750715	1	SEAL KIT F.HY CYL.781105/30/38
750724	1	SEAL KIT F.HY CYL.781141
750725	1	SEAL KIT F.HY CYL.781131-39
755695	1	SEAL KIT F. HYD CYL 781067
755697	1	SEAL KIT F.HY CYL.781083
781030	1	CYLINDER DOUBLE Ø50/25-300
781031	1	CYLINDER DOUBLE Ø40/20-120
781033	1	CYLINDER DOB Ø40/20-300 781115
781035	1	CYLINDER DOUBLE Ø50/25-150
781038	1	CYLINDER Ø50/25-900
781039	1	CYL D25/12-50 172MM alt 781139
781041	1	CYLINDER DOUBLE Ø70/50-700
781043	1	CYLINDER DOUBLE D60/25-900
781044	1	CYLINDER DOUBLE D40/20-300
781045	1	CYLINDER DOUBLE Ø50/30-500
781047	1	CYLINDER Ø60/25-1200
781051	1	CYLINDER DOUBLE Ø50/30-600
781052	1	SUBSTITUTE 78121600

parts-n°	order qty	description
781053	1	CYL F INN WING FLD alt 781107
781058	1	CYLINDER 60/25 X 725 CM PAR LH
781060	1	CYLINDER D25/12-50 L=210mm
781065	1	CYLINDER F.WING TILT
781067	1	CYL DOUB D50/30-300 78121600
781078	1	CYLINDER 60/25 X 725 CM PAR RH
781080	1	CYLINDER DOUBLE D50/25-250
781083	1	CYLINDER DOUBLE D70/40-400
781084	1	CYLINDER D50/25 L=300
781087	1	CYL DOUB 60/30-300 alt 781100
781090	1	CYL DBLD32/16-200W
781093	1	CYLINDER FOLD SPC D60/30 L=300
781096	1	CYLINDER 60/25 X 662 NAV PAR
781097	1	CYLINDER 60/25 X 725 CM PAR
781100	1	CYLINDER DOUBLE 60/30-300
781107	1	DOBCYL50/30-500/M24X2 78121200
781109	1	DOUBLE CYLINDER D 50/30-300
781111	1	CYL DOUB D50/30-300 78121600
781113	1	CYLINDER D50/25 L=300
781115	1	CYLINDER DOUBLE Ø40/20-300
781116	1	CYLINDER DOUBLE D50/25-298
781118	1	CYLINDER DOUBLE D40/20-180
781119	1	DOUBLE CYLINDER D 40/20-300
781121	1	CYLINDER D40/22-300 BLACK
781122	1	CYLINDER D40/22X300MM RED
781123	1	CYLINDER D40/22-300 BLACK
781124	1	CYLINDER 40/22X300MM RED
781126	1	CYLINDER DOUBLE D40/20-120
781127	1	CYLINDER D40/20-120
781130	1	CYLINDER DOUBL. D70/40-320
781132	1	CYL.STAB CM1200 04 78126000
781138	1	CYLINDER DOUBL. D70/40-265
781139	1	CYLINDER D25/12-50
781141	1	CYLINDER 60/25 X 635 DELTA PAR
14005600	1	HYDR.PISTON D32.0/16.0 L=25
14008203	1	HYD. CYLINDER PISTON CM+750
14015500	1	HYDR.PISTON D60.0/25.0 L=40
14018900	1	PISTON ARM F. CYL. Ø30 L=420
14022200	1	HYDR.PISTON D59.4/20.0 L=34.9
14022400	1	PISTON ARM F. CYL. Ø60 L=412
14024100	1	HYDR.PISTON D49.4/20.0 L=35
14027500	1	HYDR.PISTON D69.4/24.0 L=35
14028900	1	CYLINDER ROD D30.0 L=609.0
14029100	1	CYLINDER ROD D30.0 L=409.0
14029700	1	HYDR.PISTON D38.0/16.0 L=25
14030200	1	CYLINDER ROD D25.0 L=398
14030600	1	CYLINDER ROD D20.0 L=281.0
14030700	1	CYLINDER ROD D20.0 L=401
14030900	1	CYLINDER ROD D22.0 L=401
14031100	1	CYLINDER ROD D22.0 L=439/M22
14036200	1	CYLINDER ROD D20.0 L=221.0
14038400	1	HYDR.PISTON D49.4/20.0 L=34.9
14038500	1	PISTON HYD. CYL. Ø60/Ø25
61003600	1	CYLINDER ROD F. 781090
61022800	1	PISTON ARM F.CYL.Ø60/25L=856.5
61025200	1	PISTON ARM F.CYL.Ø60/25L=786.5
61028900	1	PISTON ARM F.CYL.Ø50/25-300
61029200	1	PISTON ARM F.CYL.Ø40/20-300
61031000	1	CYLINDER ROD FOR D70/40 - 320
61033600	1	PISTON ARM F.CYL.Ø40/20 L=120
61038000	1	CYLINDER ROD FOR D70/40

parts-n°	order qty	description
63039300	1	CYLINDER ROD F.781132
78100003	1	CYL. PARA-LIFT CM+750 W/STOP

Check cylinder barrel for stamped part number.

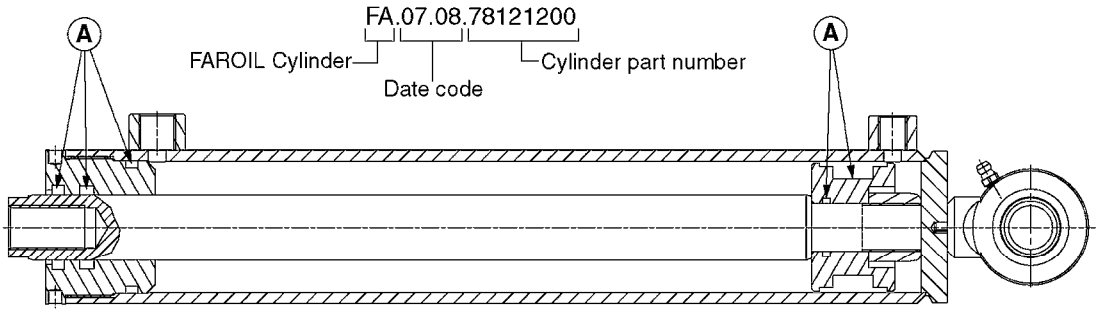

FAROIL cylinders directly replace the cylinders in the chart below. Seal kits **(A)** are for FAROIL cylinders only. Seal kits for replaced cylinders can be found on pages C0010 and C0020.

FAROIL Cylinder #	Replaces Cylinder #	FAROIL Seal Kit (A)
78120000	781001	75075900
78120100	781011	75076000
78120200	781034	75075900
78120300	781040	75076100
78120500	781093	75074600
78120600 (LH)	781096*	28117300
78120700 (LH)	781097*	28117300
78120800	781100	75075400
78121000	-	75075500
78121200	781107	75074500
78121400	781109	75075200
78121600	781111	75074500
78121800	781113	75074400
78122000	781115	75074300
78122100	781116	75074400
78122300	781118	75074300
78122400	781119	75074300
78122600	781121	75075000
78122700	781122	75075000

FAROIL Cylinder #	Replaces Cylinder #	FAROIL Seal Kit (A)
78122800	781123	75075000
78122900	781124	75075000
78123100	781126	75074300
78123200	781127	75074300
78123300 (LH)	78115000*	75075500
78124100 (RH)	78115100*	75075500
78124200**	781139	75074800
78124300 (LH)	781141*	28117300
78124600	781115	75074300
78125100 (RH)	78115000*	75075500
78125300 (LH)	78115100*	75075500
78125500 (RH)	781096*	28117300
78125600 (RH)	781097*	28117300
78125700 (RH)	781141*	28117300
78126000	781132	75074900
78126400	781090	75076500
78128000	78120500	75074600
78128800	78121200	75075200

*Replaced by separate left and right cylinders.
** Only available as 72531000 (78124200 with fittings).

Agroparts: www.HARDI-INTERNATIONAL.com

HYDRAULICS - FAROIL CYLINDERS
C0030-HIN, 01:01:16

Date 12.08.2020 11:35

parts-n°	order qty	description
781001	1	CYL.TELESCOPING Ø50/40/25_1100
781011	1	CYLINDER TELESC.70/60/40
781034	1	HY. CYLINDER D50/40/25 - 1200
781040	1	CYLINDER 60/50/30 1100MM
781090	1	CYL DBLD32/16-200W
781093	1	CYLINDER FOLD SPC D60/30 L=300
781096	1	CYLINDER 60/25 X 662 NAV PAR
781097	1	CYLINDER 60/25 X 725 CM PAR
781100	1	CYLINDER DOUBLE 60/30-300
781107	1	DOBCYL50/30-500/M24X2 78121200
781109	1	DOUBLE CYLINDER D 50/30-300
781111	1	CYL DOUB D50/30-300 78121600
781113	1	CYLINDER D50/25 L=300
781115	1	CYLINDER DOUBLE Ø40/20-300
781116	1	CYLINDER DOUBLE D50/25-298
781118	1	CYLINDER DOUBLE D40/20-180
781119	1	DOUBLE CYLINDER D 40/20-300
781121	1	CYLINDER D40/22-300 BLACK
781122	1	CYLINDER D40/22X300MM RED
781123	1	CYLINDER D40/22-300 BLACK
781124	1	CYLINDER 40/22X300MM RED
781126	1	CYLINDER DOUBLE D40/20-120
781127	1	CYLINDER D40/20-120
781132	1	CYL.STAB CM1200 04 78126000
781139	1	CYLINDER D25/12-50
781141	1	CYLINDER 60/25 X 635 DELTA PAR
28117300	1	SEAL KIT 78120600/07/43
72531000	1	CYL. D25/12-50/78124200 W/FITT
75074300	1	SEALKIT78122000/23-25/30-32/46
75074400	1	SEAL KIT 78121800/21/44
75074500	1	SEALKIT78121100-13/15/16/36/48
75074600	1	SEAL KIT 78120500/49
75074800	1	SEAL KIT 78123400/42
75074900	1	SEAL KIT 78123700
75075000	1	SEAL KIT 78122600/27/28/29
75075200	1	SEAL KIT 78120900/14/50
75075400	1	SEAL KIT 78120800
75075500	1	SEAL KIT 78121000/33/41/51/53
75075900	1	SEAL KIT FOR 78120000 & 78120200
75076000	1	SEAL KIT 78120100
75076100	1	SEAL KIT 78120300
75076500	1	SEAL KIT 78126400
78115000	1	DBL CYL D70/40-320 AIRING
78115100	1	CYL DOB.D70/40-265 AIR INLET R
78120000	1	CYL.TELESCOPING Ø50/40/25_1100
78120100	1	CYLINDER TELESC.65/40-1237
78120200	1	HY. CYLINDER D50/40/25 - 1200
78120300	1	CYLINDER 60/50/30 1100MM
78120500	1	CYLINDER FOLD SPC D60/30 L=300
		NLA - REPLACED BY 78128000
78120600	1	CYLINDER 60/25 X 662 NAV PAR L
78120700	1	SIN.CYL.Ø60/25-725 2XØ25 LEFT
78120800	1	CYLINDER DOUBLE 60/30-300
78121000	1	CYLINDER DOUBLE D70/40-400
78121200	1	CYLINDER, D50/30-500
78121400	1	DOUBLE CYLINDER D 50/30-300
78121600	1	CYLINDER DOUBLE D50/30-300
78121800	1	CYLINDER D50/25 L=300
78122000	1	CYLINDER DOUBLE Ø40/20-300 0°
78122100	1	CYLINDER DOUBLE D50/25-298
78122300	1	CYLINDER DOUBLE D40/20-180

parts-n°	order qty	description
78122400	1	DOUBLE CYLINDER D 40/20-300
78122600	1	CYLINDER D40/22-300 BLACK
78122700	1	CYLINDER D40/22X300MM RED
78122800	1	CYLINDER D40/22-300 BLACK
78122900	1	CYLINDER 40/22X300MM RED
78123100	1	CYLINDER DOUBLE D40/20-120
78123200	1	CYLINDER D40/20-120
78123300	1	DBL CYL D70/40-320 AIR INLET L
78124100	1	CYL DOB.D70/40-265 AIR INLET R
78124200	1	CYLINDER D25/12-50
78124300	1	CYLINDER 60/25 X 635 DELTA L
78124600	1	CYLINDER DOUBLE Ø40/20-300 90°
78125100	1	DBL CYL D70/40-320 AIR INLET R
78125300	1	CYL DOB.D70/40-265 AIR INLET L
78125500	1	CYLINDER 60/25 X 662 NAV PAR R
78125600	1	SIN.CYL.Ø60/25_725_2XØ25 RIGHT
78125700	1	CYLINDER 60/25 X 635 DELTA R
78126000	1	CYLINDER,DAMPNER,LOCKING
78126400	1	CYLINDER DBLE D32/16-200 W.STP
78128000	1	CYLINDER DOUB. D60/30 L=300 09
78128800	1	CYLINDER, D50/30-500

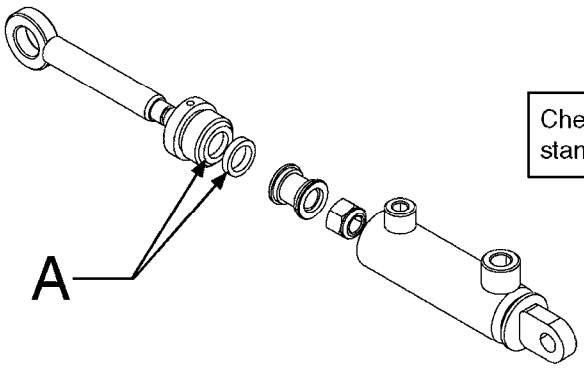

Check cylinder barrel for stamped part number.

	A
781136	28064100
781137	28064200
78114300	75083800
78120000	75075900
78120100	75076000
78120200	75075900
78120300	75076100
78120400	75074200
78120500	75074600
78120600	28117300
78120700	28117300
78120800	75075400
78121000	75075500
78121200	75074500
78121300	75074500
78121400	75075200
78121600	75074500
78121800	75074400
78122000	75074300
78122100	75074400
78122300	75074300
78122400	75074300
78122600	75075000
78122700	75075000

	A
78122800	75075000
78122900	75075000
78123000	75074300
78123100	75074300
78123200	75074300
78123400*	75074800
78123700	75074900
78124100	75075500
78124300	28117300
78124400	75074400
78124500	75076400
78124600	75074300
78125100	75075500
78125300	75075500
78125500	28117300
78125800	75076400
78126000	75074900
78126400	75076500
78126500	75074800
78127200	75084400
78127800	75084500
78128000	75074600
78128100	75084700
78128200	75084800

	A
78128500	75084900
78128700	75075200
78128800	75075200
78129900	75074300
78130600	75074400
78130900	75085400
78131000	75075400
78131100	75085500
78131200	75084800
78131300	75085800
78131400	75084800
78131800	75586200
78132600	75587200
78132700	75084600
78132800	75586100
78132900	75586100
78133300	75587000
78133900	75075500
78134000	75075500
78134600	75075400
78509004	75084800

* Only available as 72320300 (78123400 with spring lock & fittings).

parts-n°	order qty	description
781136	1	HYDRAULIC SHOCK NCM4400 SUSP.
781137	1	HYDRAULIC SHOCK NCM6600 SUSP.
28064100	1	GASKET SET FOR CYL. 781136
28064200	1	GASKET SET FOR CYL. 781137
28117300	1	SEAL KIT 78120600/07/43
72320300	1	HYD. CYL. STEERING LOCK CM "05
75074200	1	SEAL KIT 78120400
75074300	1	SEALKIT78122000/23-25/30-32/46
75074400	1	SEAL KIT 78121800/21/44
75074500	1	SEALKIT78121100-13/15/16/36/48
75074600	1	SEAL KIT 78120500/49
75074800	1	SEAL KIT 78123400/42
75074900	1	SEAL KIT 78123700
75075000	1	SEAL KIT 78122600/27/28/29
75075200	1	SEAL KIT 78120900/14/50
75075400	1	SEAL KIT 78120800
75075500	1	SEAL KIT 78121000/33/41/51/53
75075900	1	SEAL KIT FOR 78120000 & 78120200
75076000	1	SEAL KIT 78120100
75076100	1	SEAL KIT 78120300
75076400	1	SEAL KIT 78124500 & 78125800
75076500	1	SEAL KIT 78126400
75083800	1	SEAL KIT F.78114300
75084400	1	SEAL KIT FOR 78127200/7500
75084500	1	SEAL KIT FOR 78127800
75084600	1	SEAL KIT FOR 781279/8600
75084700	1	SEAL KIT FOR 78128100
75084800	1	SEAL KIT FOR 78128200/78131200
75084900	1	SEAL KIT FOR 78128500
75085400	1	SEAL KIT FOR 78130900
75085500	1	SEAL KIT FOR HYDRAULIC CYLINDER 78131100
75085800	1	SEAL KIT F. CYL. 78130400
75586100	1	SEAL KIT FOR 78131700
75586200	1	SEALKIT 80/40 FOR 78131800
75587000	1	SEAL KIT FOR 78133300
75587200	1	SEAL KIT FOR 78132600
78114300	1	CYLINDER 70/30 X 662 LG PAR R
78120000	1	CYL.TELESCOPING Ø50/40/25_1100
78120100	1	CYLINDER TELESC.65/40-1237
78120200	1	HY. CYLINDER D50/40/25 - 1200
78120300	1	CYLINDER 60/50/30 1100MM
78120400	1	CYL DBLD32/16-200W
78120500	1	CYLINDER FOLD SPC D60/30 L=300
78120600	1	CYLINDER 60/25 X 662 NAV PAR L
78120700	1	SIN.CYL.Ø60/25-725 2XØ25 LEFT
78120800	1	CYLINDER DOUBLE 60/30-300
78121000	1	CYLINDER DOUBLE D70/40-400
78121200	1	CYLINDER, D50/30-500
78121300	1	CYLINDER DBLE Ø50/30-600(700)
78121400	1	DOUBLE CYLINDER D 50/30-300
78121600	1	CYLINDER DOUBLE D50/30-300
78121800	1	CYLINDER D50/25 L=300
78122000	1	CYLINDER DOUBLE Ø40/20-300 0°
78122100	1	CYLINDER DOUBLE D50/25-298
78122300	1	CYLINDER DOUBLE D40/20-180
78122400	1	DOUBLE CYLINDER D 40/20-300
78122600	1	CYLINDER D40/22-300 BLACK
78122700	1	CYLINDER D40/22X300MM RED
78122800	1	CYLINDER D40/22-300 BLACK
78122900	1	CYLINDER 40/22X300MM RED
78123000	1	CYL DOUBLE Ø40/20-120

parts-n°	order qty	description
78123100	1	CYLINDER DOUBLE D40/20-120
78123200	1	CYLINDER D40/20-120
78123400	1	CYLINDER FOR TRACK LOCK, NCM
78123700	1	CYLINDER,DAMPNER,LOCK 78126000
78124100	1	CYL DOB.D70/40-265 AIR INLET R
78124300	1	CYLINDER 60/25 X 635 DELTA L
78124400	1	CYLINDER DOUBLE D50/25_250
78124500	1	CYLINDER 70/30 X 662 LG PAR L
78124600	1	CYLINDER DOUBLE Ø40/20-300 90°
78125100	1	DBL CYL D70/40-320 AIR INLET R
78125300	1	CYL DOB.D70/40-265 AIR INLET L
78125500	1	CYLINDER 60/25 X 662 NAV PAR R
78125800	1	CYLINDER 70/30 X 662 LG PAR R
78126000	1	CYLINDER,DAMPNER,LOCKING
78126400	1	CYLINDER DBLE D32/16-200 W.STP
78126500	1	CYLINDER D25/12-50 FAROIL NNAV
78127200	1	CYLINDER DOUB. D40/25 L=455
78127800	1	HYDRAULIC CYLINDER 25-40
78128000	1	CYLINDER DOUB. D60/30 L=300 09
78128100	1	CYLINDER 70/30-300/TILT TDZ
78128200	1	PLUNGECYLINDER 70/840 2X30
78128500	1	CYLINDER DOUBLE PLUNGER D60X75
78128700	1	CYLINDER DOUBLE D50/30 500
78128800	1	CYLINDER, D50/30-500
78129900	1	CYLINDER DOUBLE D40/20 180 1/4
78130600	1	DOB.CYL.Ø50/25-240/M. SENSOR
78130900	1	CYLINDER, D70/40-500 TDZ FOLD
78131000	1	CYLINDER, 60/30X462, 120' SPC
78131100	1	HY. CYLINDER, 70/40X400
78131200	1	PLUNGECYLINDER 70/838 2X30
78131300	1	CYLINDER, D70/40-500 TDZ FOLD
78131400	1	PLUNGE CYLINDER D70 L=838 2X35
78131800	1	CYLINDER 80/40-300/ TILT TDZ
78132600	1	DOB.CYL.Ø90/50-350/Ø35
78132700	1	DOB.CYL.Ø70/30-436/ Ø30
78132800	1	DOB.CYL.Ø70/30-360/M30 SPEC.
78132900	1	DOB.CYL.Ø70/30-280/M30 SPEC.
78133300	1	DOB.CYL.Ø50/30 500 END DAMPING
78133900	1	DOB.CYL.Ø70/40-322 TRACK RIGHT '15
78134000	1	DOB.CYL.Ø70/40-322 TRACK LEFT '15
78134600	1	SIN.CYL.Ø60/30_380_M24X2
78509004	1	PLUNGECYLINDER 70/838 Ø30, CM85/10000

IMPORTANT!

BSP hoses require BSP fittings
ORFS hoses require ORFS fittings

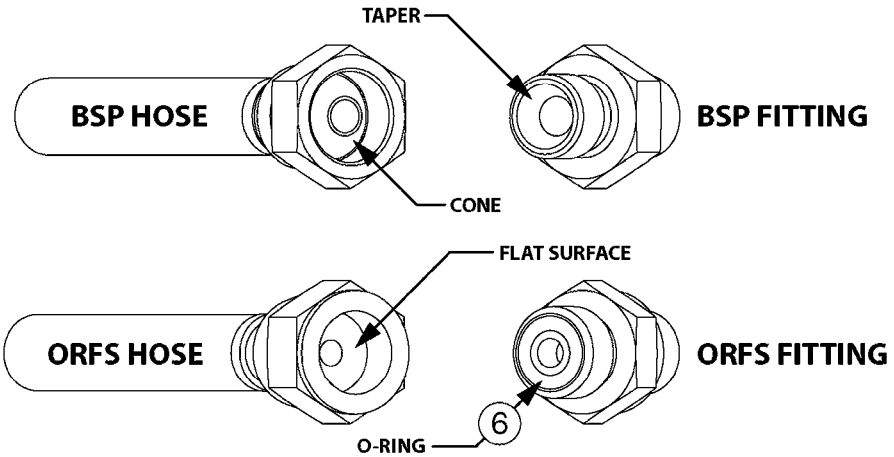

1/4" ORFS Hoses require 9/16” ORFS Fittings
3/8” ORFS Hoses require 11/16“ ORFS Fittings
1/2” ORFS Hoses require 13/16“ ORFS Fittings
3/4” ORFS Hoses require 1-3/16” ORFS Fittings

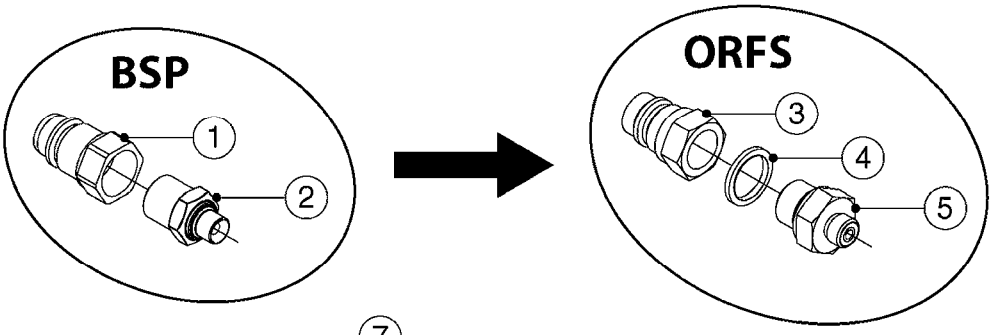

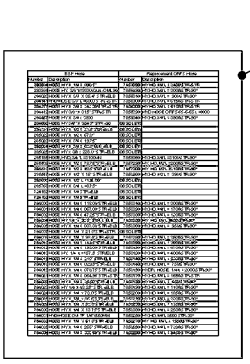

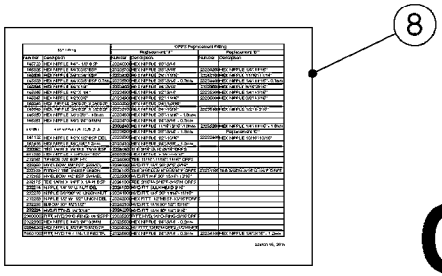

C0045

Agroparts: www.HARDI-INTERNATIONAL.com

HYDRAULICS - BSP TO ORFS
C0045-HIN, 24:03:16

Date 12.08.2020 11:35

Pos.	parts-nº	order qty	description
1	10466003	1	COUPLER PIONEER 8010-04 1/2NPT
2	231907	1	HEX NIPPLE 1/4"BSP X 1/2"NPT
2	231906	1	HEX NIPPLE 3/8"BSP X 1/2"NPT
2	147132	1	HEX NIPPLE 1/2"X1/2" BSP DEL
3	230311	1	QUICK COUPLING 1/2"
4	241356	1	DOWTYSEAL 1/2"
5	23234800	1	HEX NIPPLE 1/2"-9/16"
			ORFS FITTING FOR 1/4" HOSE
5	23234900	1	HEX NIPPLE 1/2"-11/16"
			ORFS FITTING FOR 3/8" HOSE
5	23235300	1	HEX NIPPLE 1/2"-13/16"
			ORFS FITTING FOR 1/2" HOSE
6	242102	1	O-RING Ø9.25X1.78 NITRIL 90SH
6	24263200	1	O-RING Ø7.66X1.78 NITRIL 90SH
6	24263300	1	O-RING Ø12.42X1.78 NITRIL 90SH
6	24263400	1	O-RING Ø18.77X1.78 NITRIL 90SH
7	67002403	1	CHART - BSP TO ORFS HOSES
8	67002503	1	CHART - BSP TO ORFS FITTINGS

HYDRAULICS - SB WING FOLD
C0050-HIN, 08:01:18

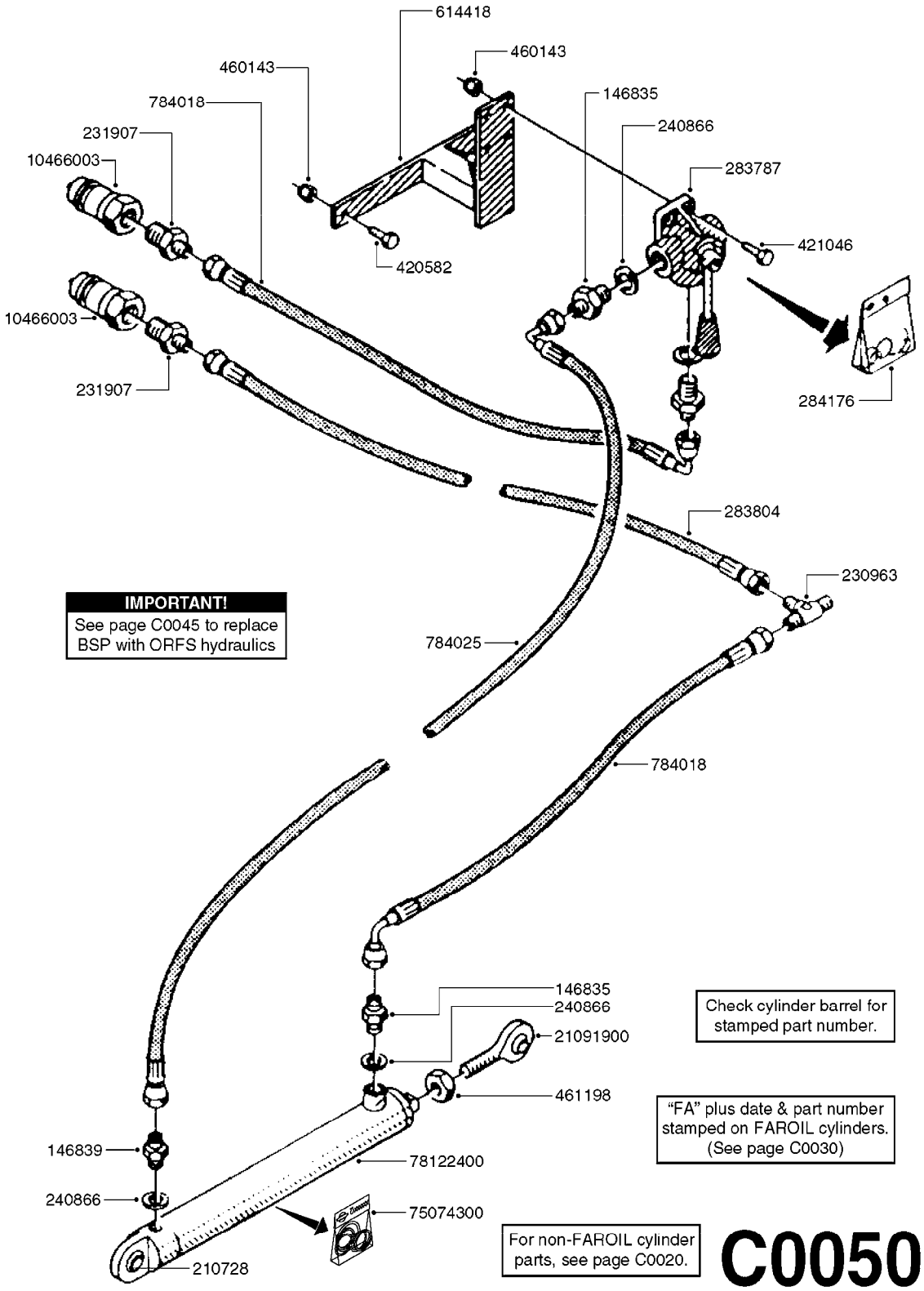

IMPORTANT!
See page C0045 to replace BSP with ORFS hydraulics

Check cylinder barrel for stamped part number.

"FA" plus date & part number stamped on FAROIL cylinders. (See page C0030)

For non-FAROIL cylinder parts, see page C0020.

C0050

Agroparts: www.HARDI-INTERNATIONAL.com

HYDRAULICS - SB WING FOLD
C0050-HIN, 08:01:18

Date 12.08.2020 11:35

parts-n°	order qty	description
146835	1	HEX NIPPLE 1/4" - 3/8" BSP
146839	1	HEX NIPPLE 1/4"X3/8" BSP 0.7MM
210728	1	BEARING F.LINK HEAD M17
230963	1	TEE 1/4"M X 1/4"M X 1/4"M BSP
231907	1	HEX NIPPLE 1/4"BSP X 1/2"NPT
240866	1	DOWTYSEAL 3/8"
283787	1	VALVE HY 3 WAY F.VARIANT
283804	1	HOSE HY X 1/4 X 090.5'
284176	1	O-RINGS KIT F/HY-VALVE 283787
420582	1	BOLT HEX 8.8 DEL M8X20 FT A2
421046	1	BOLT HEX M8X25/25 A2 SS DIN933
460143	1	LOCK NUT M8 SST A2 DIN985
461198	1	NUT HEX M16X2 JAMB
614418	1	BRACKET HY-VALVE
784018	1	HOSE HY X 1/4 X 029.5"STR+ELB
784025	1	HOSE HY X 1/4" x 86.6"STR+ELB
10466003	1	COUPLER PIONEER 8010-04 1/2NPT
21091900	1	LINK HEAD M16 x D17 DELTA
75074300	1	SEALKIT78122000/23-25/30-32/46
78122400	1	DOUBLE CYLINDER D 40/20-300

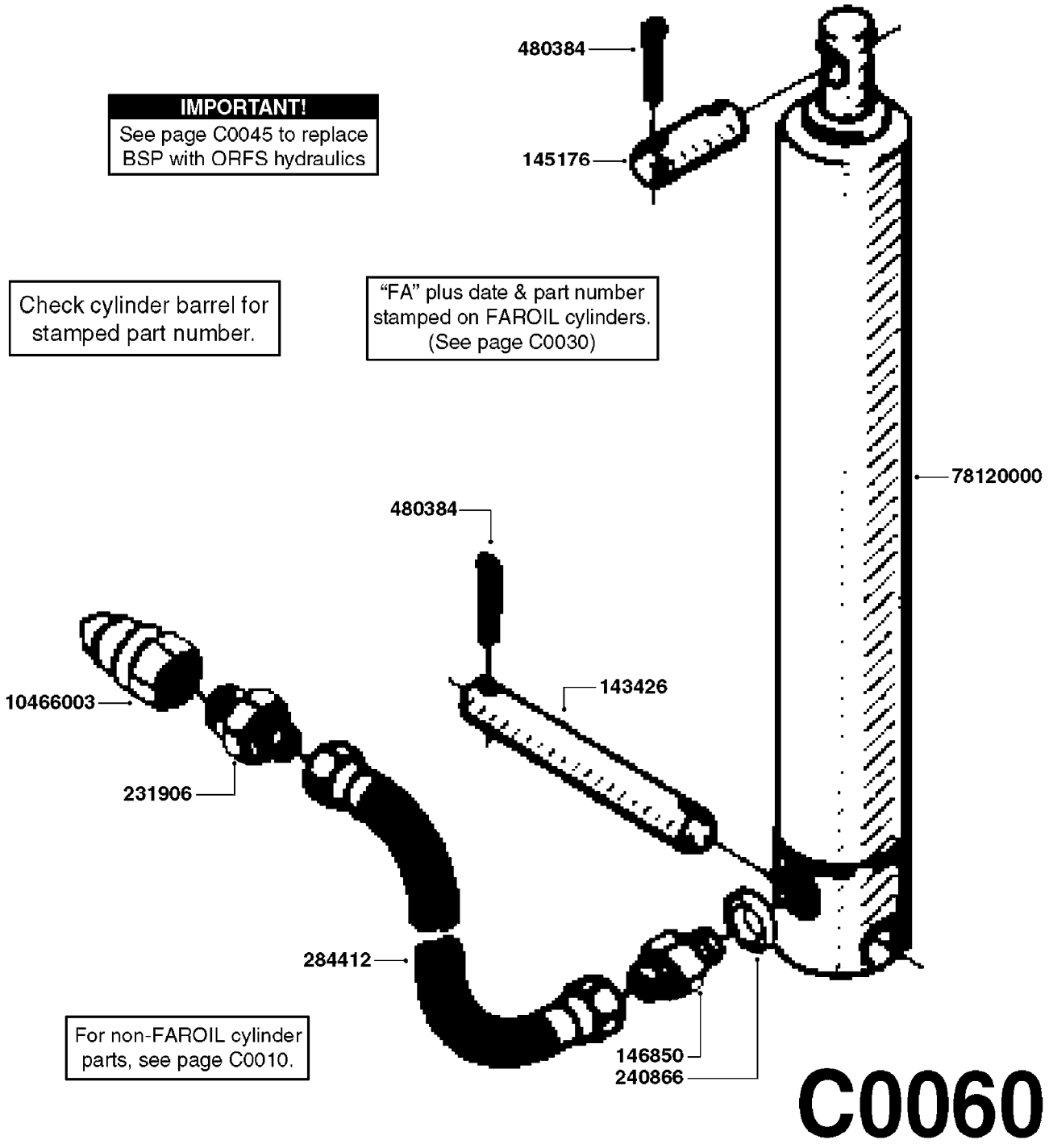

IMPORTANT!
See page C0045 to replace BSP with ORFS hydraulics

Check cylinder barrel for stamped part number.

"FA" plus date & part number stamped on FAROIL cylinders. (See page C0030)

For non-FAROIL cylinder parts, see page C0010.

Agroparts: www.HARDI-INTERNATIONAL.com

HYDRAULICS-MB BOOM LIFT CYLNDR
C0060-HIN, 23:03:16

Date 12.08.2020 11:35

parts-n°	order qty	description
143426	1	PIN 20x160mm F/HYD/CYL.
145176	1	PIN D19.8 X 60
146850	1	HEX NIPPLE 3/8"x3/8" - 1.8mm
231906	1	HEX NIPPLE 3/8"BSP X 1/2"NPT
240866	1	DOWTYSEAL 3/8"
284412	1	HOSE HY 3/8" X 315" STR+STR
480384	1	PIN COTTER 3/16 x 1-1/2"
10466003	1	COUPLER PIONEER 8010-04 1/2NPT
78120000	1	CYL.TELESCOPING Ø50/40/25_1100

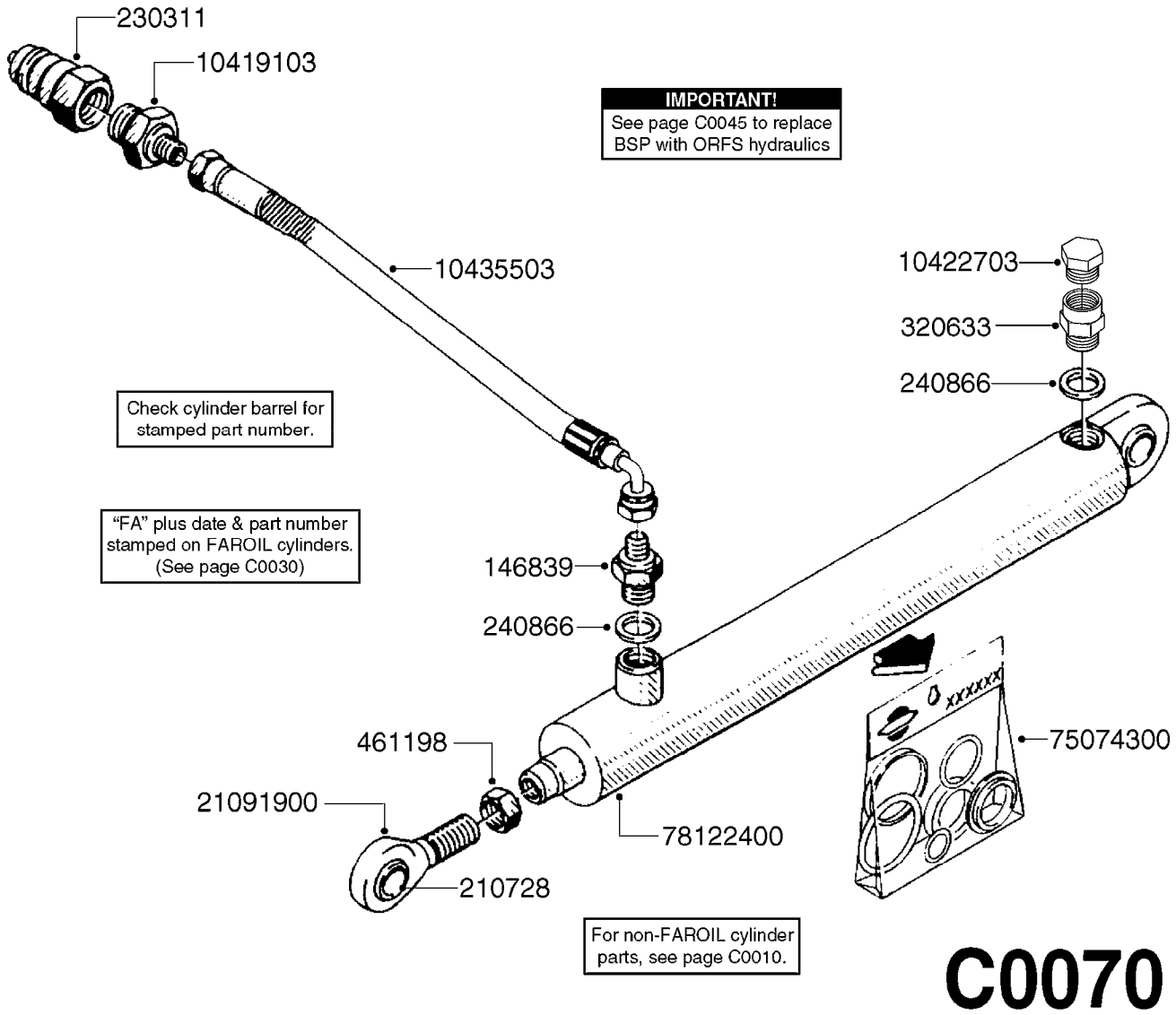
230311
10419103
IMPORTANT!
See page C0045 to replace BSP with ORFS hydraulics
10435503
10422703
320633
240866
Check cylinder barrel for stamped part number.
"FA" plus date & part number stamped on FAROIL cylinders. (See page C0030)
146839
240866
461198
21091900
210728
78122400
75074300
For non-FAROIL cylinder parts, see page C0010.

C0070

Agroparts: www.HARDI-INTERNATIONAL.com

HYDRAULICS-MB BOOM WING TILT
C0070-HIN, 08:01:18

Date 12.08.2020 11:35

parts-n°	order qty	description
146839	1	HEX NIPPLE 1/4"X3/8" BSP 0.7MM
210728	1	BEARING F.LINK HEAD M17
230311	1	QUICK COUPLING 1/2"
240866	1	DOWTYSEAL 3/8"
320633	1	FITT.DK HN 3/8"M X 3/8"F BSP
461198	1	NUT HEX M16X2 JAMB
10419103	1	FITT.HY HEX RED.3/8 X 1/2
10422703	1	BREATHER FOR HY CYLINDER
10435503	1	*HOSE HY X 1/4 X 270' WITH FIT
21091900	1	LINK HEAD M16 x D17 DELTA
75074300	1	SEALKIT78122000/23-25/30-32/46
78122400	1	DOUBLE CYLINDER D 40/20-300

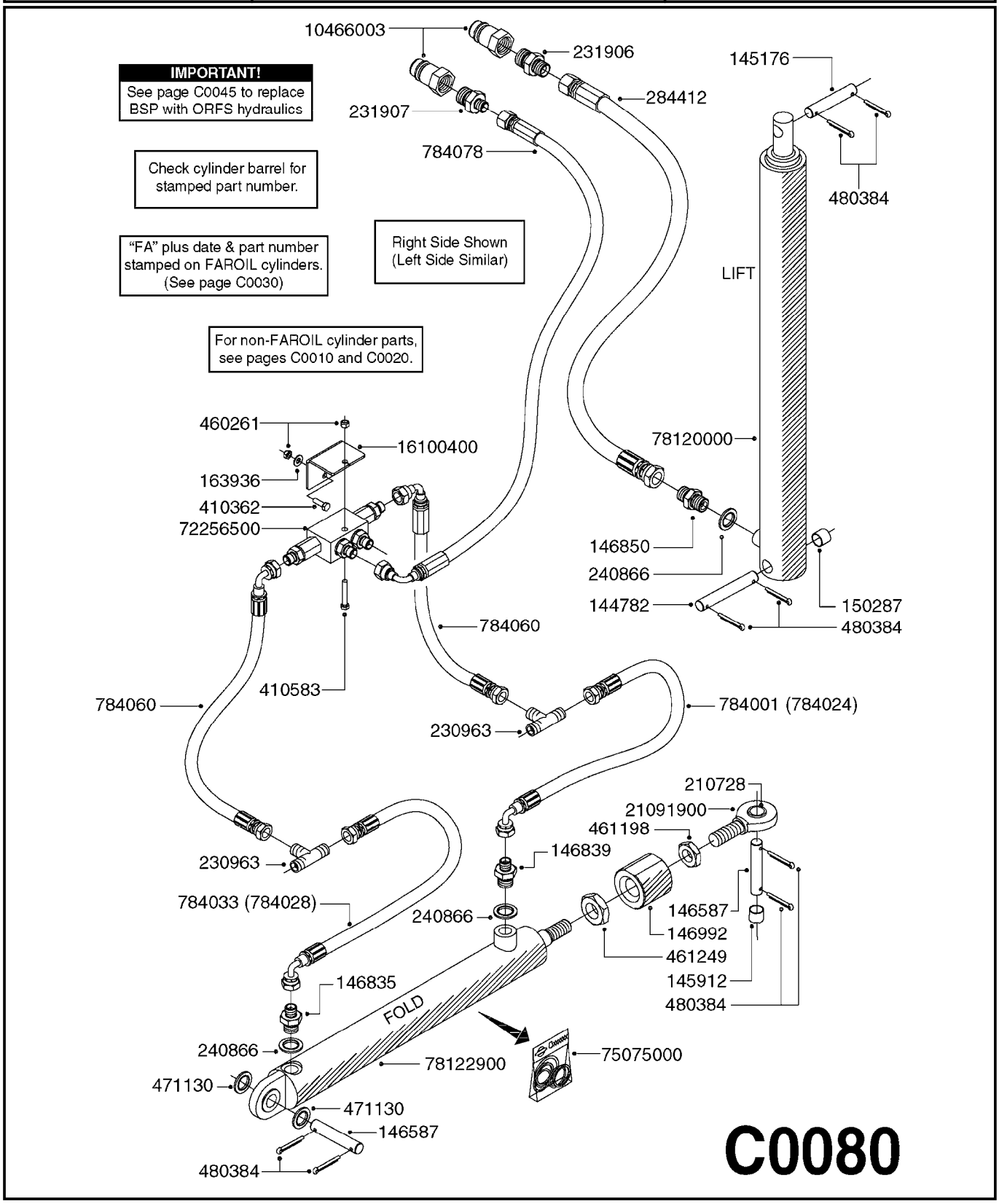
IMPORTANT!
See page C0045 to replace BSP with ORFS hydraulics
Check cylinder barrel for stamped part number.
"FA" plus date & part number stamped on FAROIL cylinders. (See page C0030)
Right Side Shown (Left Side Similar)
For non-FAROIL cylinder parts, see pages C0010 and C0020.
10466003
231906
284412
231907
784078
145176
480384
LIFT
78120000
146850
240866
144782
150287
480384
460261
16100400
163936
410362
72256500
784060
410583
784060
230963
784001 (784024)
210728
21091900
461198
146839
230963
784033 (784028)
240866
146587
146992
461249
145912
480384
146835
FOLD
240866
78122900
75075000
471130
471130
146587
480384
C0080

Agroparts: www.HARDI-INTERNATIONAL.com

HYDRAULICS-FALCON FOLD 42'-50'
C0080-HIN, 08:01:18

Date 12.08.2020 11:36

parts-n°	order qty	description
144782	1	SHAFT 20 X 140
145176	1	PIN D19.8 X 60
145912	1	BUSHING D19.8/D17.0X7MM
146587	1	PIN D16.8 X 65
146835	1	HEX NIPPLE 1/4" - 3/8" BSP
146839	1	HEX NIPPLE 1/4"X3/8" BSP 0.7MM
146850	1	HEX NIPPLE 3/8"x3/8" - 1.8mm
146992	1	BUSHING F.CYLINDER
150287	1	SPACER D25.4/1.5 L=15MM
163936	1	WASHER D15/D6.2X1
210728	1	BEARING F.LINK HEAD M17
230963	1	TEE 1/4"M X 1/4"M X 1/4"M BSP
231906	1	HEX NIPPLE 3/8"BSP X 1/2"NPT
231907	1	HEX NIPPLE 1/4"BSP X 1/2"NPT
240866	1	DOWTYSEAL 3/8"
284412	1	HOSE HY 3/8" X 315" STR+STR
410362	1	BOLT HEX 8.8 SS M6X20
410583	1	BOLT HEX 8.8 DEL M6X40
460261	1	NUT HEX M6X1.00 LOCK DIN985 A2 SS
461198	1	NUT HEX M16X2 JAMB
461249	1	NUT M22X1.5 DIN439B
471130	1	WASHER, M24, Ø44/25.0X 4.0, SS
480384	1	PIN COTTER 3/16 x 1-1/2"
784001	1	HOSE HY X 1/4 X 067.00"STR+ELB
784024	1	HOSE HY X 1/4" x 73.0"STR+ELB
784028	1	HOSE HY X 1/4" X 53.0"STR+ELB
784033	1	HOSE HY X 1/4" X 61.0"STR+ELB
784060	1	HOSE HY X 1/4 X 017.75"STR+ELB
784078	1	HOSE HY X 1/4 X 417.33"STR+ELB
10466003	1	COUPLER PIONEER 8010-04 1/2NPT
16100400	1	PLATE 3 X 60 X 91 HY BLOCK MT
21091900	1	LINK HEAD M16 x D17 DELTA
72256500	1	DOUB.PILOT STEERED COUNT.VALVE
75075000	1	SEAL KIT 78122600/27/28/29
78120000	1	CYL.TELESCOPING Ø50/40/25_1100
78122900	1	CYLINDER 40/22X300MM RED

HYDRAULICS-FALCON 42'-50' NN
C0090-HIN, 08:01:18

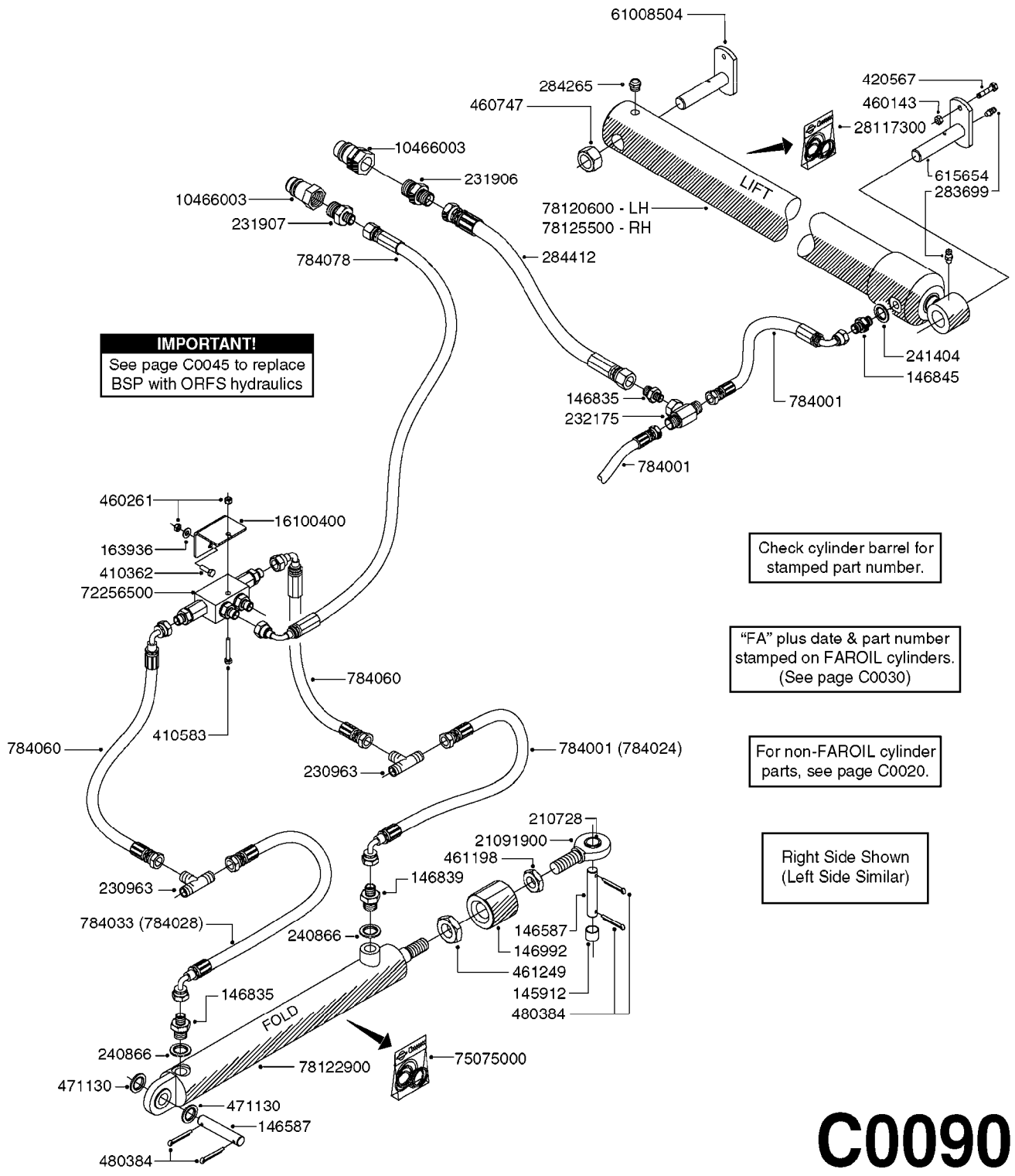

Check cylinder barrel for stamped part number.

"FA" plus date & part number stamped on FAROIL cylinders. (See page C0030)

For non-FAROIL cylinder parts, see page C0020.

Right Side Shown (Left Side Similar)

C0090

Agroparts: www.HARDI-INTERNATIONAL.com

HYDRAULICS-FALCON 42'-50' NN
C0090-HIN, 08:01:18

Date 12.08.2020 11:36

parts-n°	order qty	description
145912	1	BUSHING D19.8/D17.0X7MM
146587	1	PIN D16.8 X 65
146835	1	HEX NIPPLE 1/4" - 3/8" BSP
146839	1	HEX NIPPLE 1/4"X3/8" BSP 0.7MM
146845	1	HEX NIPPLE 1/4"X1/4"
146992	1	BUSHING F.CYLINDER
163936	1	WASHER D15/D6.2X1
210728	1	BEARING F.LINK HEAD M17
230963	1	TEE 1/4"M X 1/4"M X 1/4"M BSP
231906	1	HEX NIPPLE 3/8"BSP X 1/2"NPT
231907	1	HEX NIPPLE 1/4"BSP X 1/2"NPT
232175	1	TEE 1/4"M X 1/4"F X 1/4"M BSP
240866	1	DOWTYSEAL 3/8"
241404	1	DOWTY SEAL 1/4"
283699	1	GREASE NIPPLE M6X1
284265	1	PLUG BREATHER 1/4" F/CYLINDER
284412	1	HOSE HY 3/8" X 315" STR+STR
410362	1	BOLT HEX 8.8 SS M6X20
410583	1	BOLT HEX 8.8 DEL M6X40
420567	1	BOLT HEX 8.8 DEL M8X30 FT
460143	1	LOCK NUT M8 SST A2 DIN985
460261	1	NUT HEX M6X1.00 LOCK DIN985 A2 SS
460747	1	NUT HEX M24 LOCK
461198	1	NUT HEX M16X2 JAMB
461249	1	NUT M22X1.5 DIN439B
471130	1	WASHER, M24, Ø44/25.0X 4.0, SS
480384	1	PIN COTTER 3/16 x 1-1/2"
615654	1	PIN D25 X 123 F. PARALIFT
784001	1	HOSE HY X 1/4 X 067.00"STR+ELB
784024	1	HOSE HY X 1/4" x 73.0"STR+ELB
784028	1	HOSE HY X 1/4" X 53.0"STR+ELB
784033	1	HOSE HY X 1/4" X 61.0"STR+ELB
784060	1	HOSE HY X 1/4 X 017.75"STR+ELB
784078	1	HOSE HY X 1/4 X 417.33"STR+ELB
10466003	1	COUPLER PIONEER 8010-04 1/2NPT
16100400	1	PLATE 3 X 60 X 91 HY BLOCK MT
21091900	1	LINK HEAD M16 x D17 DELTA
28117300	1	SEAL KIT 78120600/07/43
61008504	1	MOUNTING BOLT Ø25X98/M24
72256500	1	DOUB.PILOT STEERED COUNT.VALVE
75075000	1	SEAL KIT 78122600/27/28/29
78120600	1	CYLINDER 60/25 X 662 NAV PAR L
78122900	1	CYLINDER 40/22X300MM RED
78125500	1	CYLINDER 60/25 X 662 NAV PAR R

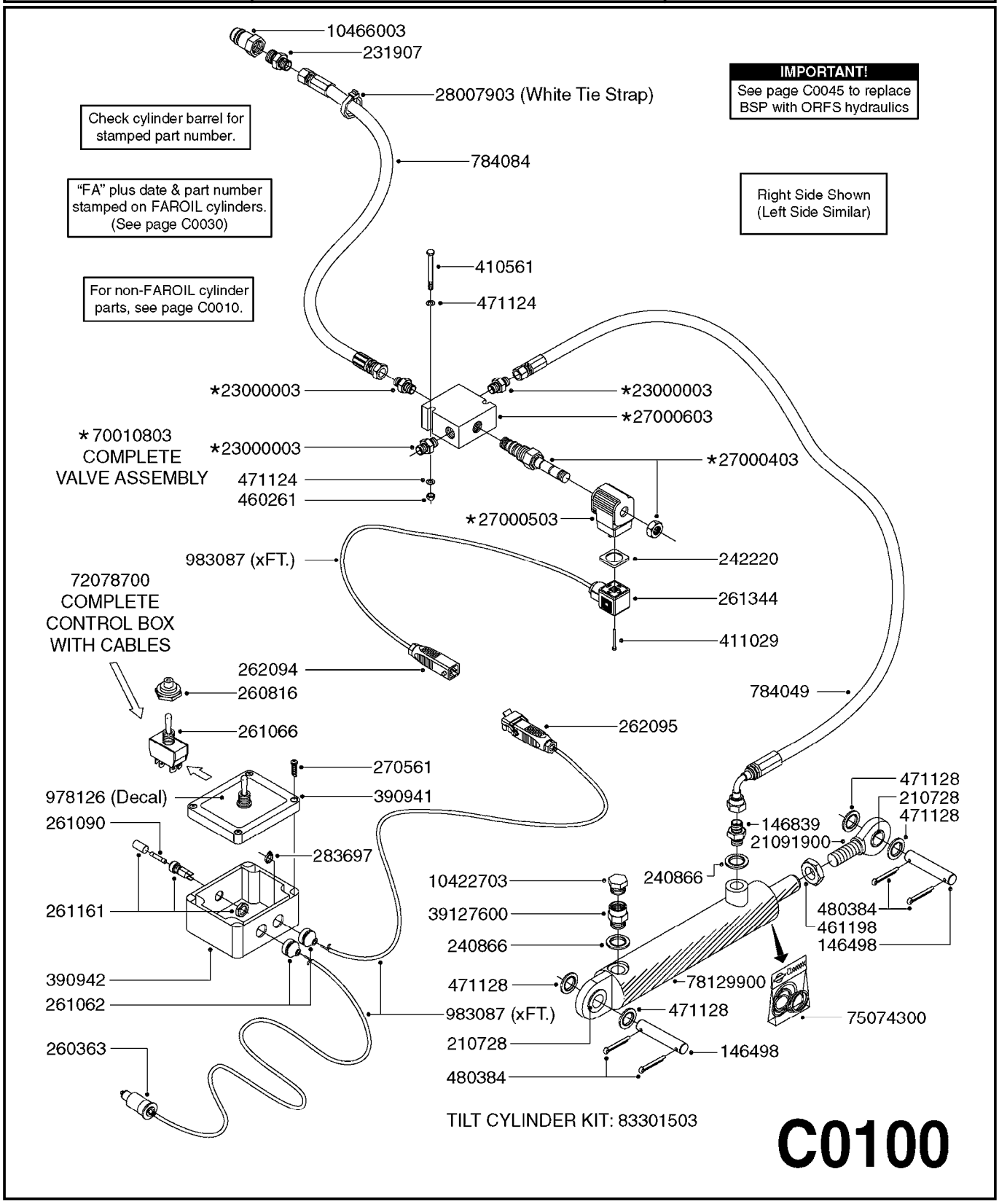
10466003
231907
28007903 (White Tie Strap)
IMPORTANT!
See page C0045 to replace BSP with ORFS hydraulics
Check cylinder barrel for stamped part number.
784084
"FA" plus date & part number stamped on FAROIL cylinders. (See page C0030)
Right Side Shown (Left Side Similar)
410561
471124
For non-FAROIL cylinder parts, see page C0010.
*23000003
*23000003
*27000603
*70010803 COMPLETE VALVE ASSEMBLY
*23000003
471124
460261
*27000403
*27000503
983087 (xFT.)
242220
261344
72078700 COMPLETE CONTROL BOX WITH CABLES
411029
262094
260816
784049
261066
262095
270561
978126 (Decal)
390941
471128
210728
471128
261090
146839
21091900
283697
240866
10422703
261161
39127600
480384
461198
146498
240866
390942
471128
78129900
261062
983087 (xFT.)
471128
75074300
210728
146498
260363
480384
TILT CYLINDER KIT: 83301503
C0100

Agroparts: www.HARDI-INTERNATIONAL.com

HYDRAULICS FALCON TILT 42'-50'
C0100-HIN, 08:01:18

Date 12.08.2020 11:36

parts-n°	order qty	description
146498	1	PIN D16.8 X 75
146839	1	HEX NIPPLE 1/4"X3/8" BSP 0.7MM
210728	1	BEARING F.LINK HEAD M17
231907	1	HEX NIPPLE 1/4"BSP X 1/2"NPT
240866	1	DOWTYSEAL 3/8"
242220	1	GASKET F. HIRSMANN PLUG
260363	1	PLUG 2 POLE 12V
260816	1	CAP W/RUBBER BOOT F.EC SWITCH
261062	1	GROMMET
261066	1	SWITCH 2 POLE
261090	1	FUSE 5 X 20 6.3A, 250V
261161	1	FUSE HOLDER 5 X 20 MM
261344	1	HIRSCHMANN PLUG B
262094	1	PLUG F. CABLE MALE
262095	1	PLUG F. CABLE FEMALE
270561	1	SCREW W/SPRING ASSY. (QTY 1)
283697	1	TIESTRAP 200MM
390941	1	LID FOR TILT CONTROL BOX
390942	1	TILT CONTROL BOX
410561	1	BOLT HEX 8.8 DEL M6X50 FT
411029	1	SCREW M3X35 F.HIRSMANN PLUG
460261	1	NUT HEX M6X1.00 LOCK DIN985 A2 SS
461198	1	NUT HEX M16X2 JAMB
471124	1	WASHER, M6, Ø18/ 6.4X 1.6, SS
471128	1	WASHER, M16, Ø30/17.0X 3.0, SS
480384	1	PIN COTTER 3/16 x 1-1/2"
784049	1	HOSE HY X 1/4" X 240"STR+ELB
784084	1	HOSE HY X 1/4 X 191.25"STR+STR
978126	1	DECAL FOR SPL TILT CONTROL BOX
983087	1	ELEC. CABLE 2 WIRE X 0.75MM
10422703	1	BREATHER FOR HY CYLINDER
10466003	1	COUPLER PIONEER 8010-04 1/2NPT
21091900	1	LINK HEAD M16 x D17 DELTA
23000003	1	FITT, HYD,3/8"O-RINGx1/4"BSPP
27000403	1	STERLING VALVE GS02-30-00-N
27000503	1	STERLING COIL 12VDC CCS012D
27000603	1	STERLING BODY LB1-0523-A
28007903	1	TIE STRAP WHITE 9/64"W x 6"L
39127600	1	NIPPEL 3/8"-1/2"NPT + 1/4"RG
70010803	1	VALVE ASSY. TILT SPL
72078700	1	CONTROL BOX F. BOOM TILT SPL
75074300	1	SEALKIT78122000/23-25/30-32/46
78129900	1	CYLINDER DOUBLE D40/20 180 1/4
83301503	1	TILT CYLINDER KIT F.FALCON

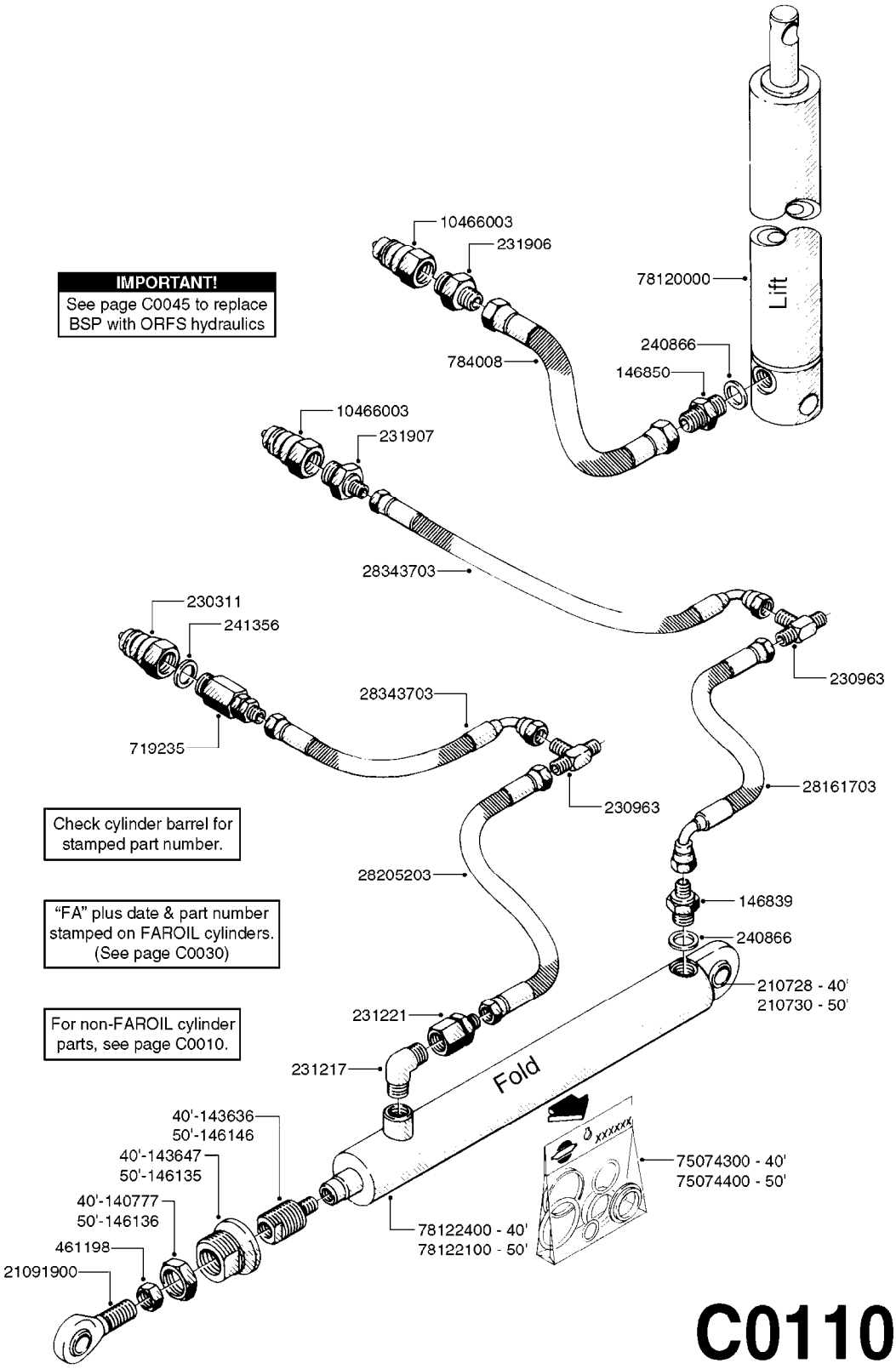
IMPORTANT!
See page C0045 to replace BSP with ORFS hydraulics
10466003
231906
78120000
Lift
240866
784008
146850
10466003
231907
28343703
230311
241356
230963
28343703
719235
28161703
230963
Check cylinder barrel for stamped part number.
28205203
146839
240866
"FA" plus date & part number stamped on FAROIL cylinders. (See page C0030)
210728 - 40'
210730 - 50'
231221
For non-FAROIL cylinder parts, see page C0010.
231217
Fold
40'-143636
50'-146146
40'-143647
50'-146135
75074300 - 40'
75074400 - 50'
40'-140777
50'-146136
78122400 - 40'
78122100 - 50'
461198
21091900

C0110

Agroparts: www.HARDI-INTERNATIONAL.com

HYDRAULICS - GW/HY 40' & 50'
C0110-HIN, 08:01:18

Date 12.08.2020 11:36

parts-n°	order qty	description
140777	1	NUT HEX 3/4" BSP JAMB
143636	1	THREADED INSERT F.CYLINDER END
143647	1	COLLAR F.THREAD.ROD EXTENTON
146135	1	ADJUSTING SCREW F/PISTON (DELTA)
146136	1	NUT M30 X 1.5
146146	1	ADAPTOR THREADED F.HY CYLINDER
146839	1	HEX NIPPLE 1/4"X3/8" BSP 0.7MM
146850	1	HEX NIPPLE 3/8"x3/8" - 1.8mm
210728	1	BEARING F.LINK HEAD M17
210730	1	BEARING F.LINK HEAD M20
230311	1	QUICK COUPLING 1/2"
230963	1	TEE 1/4"M X 1/4"M X 1/4"M BSP
231217	1	ELBOW 3/8'X3/8'
231221	1	NIPPLE W/NUT 3/8' - 1/4'
231906	1	HEX NIPPLE 3/8"BSP X 1/2"NPT
231907	1	HEX NIPPLE 1/4"BSP X 1/2"NPT
240866	1	DOWTYSEAL 3/8"
241356	1	DOWTYSEAL 1/2"
461198	1	NUT HEX M16X2 JAMB
719235	1	THROTTLE VALVE HY.
784008	1	HOSE HY X 1/4" X 98.4"STR+ELB
10466003	1	COUPLER PIONEER 8010-04 1/2NPT
21091900	1	LINK HEAD M16 x D17 DELTA
28161703	1	HOSE HY X1/4X013.75'STR+ELB
28205203	1	HOSE HY X1/4X025.56" STR+STR
28343703	1	HOSE HY X1/4X177.18" STR+ELB
75074300	1	SEALKIT78122000/23-25/30-32/46
75074400	1	SEAL KIT 78121800/21/44
78120000	1	CYL.TELESCOPING Ø50/40/25_1100
78122100	1	CYLINDER DOUBLE D50/25-298
78122400	1	DOUBLE CYLINDER D 40/20-300

HYDRAULICS - 3PT EAGLE HY
C0120-HIN, 08:01:18

Date 12.08.2020 11:36

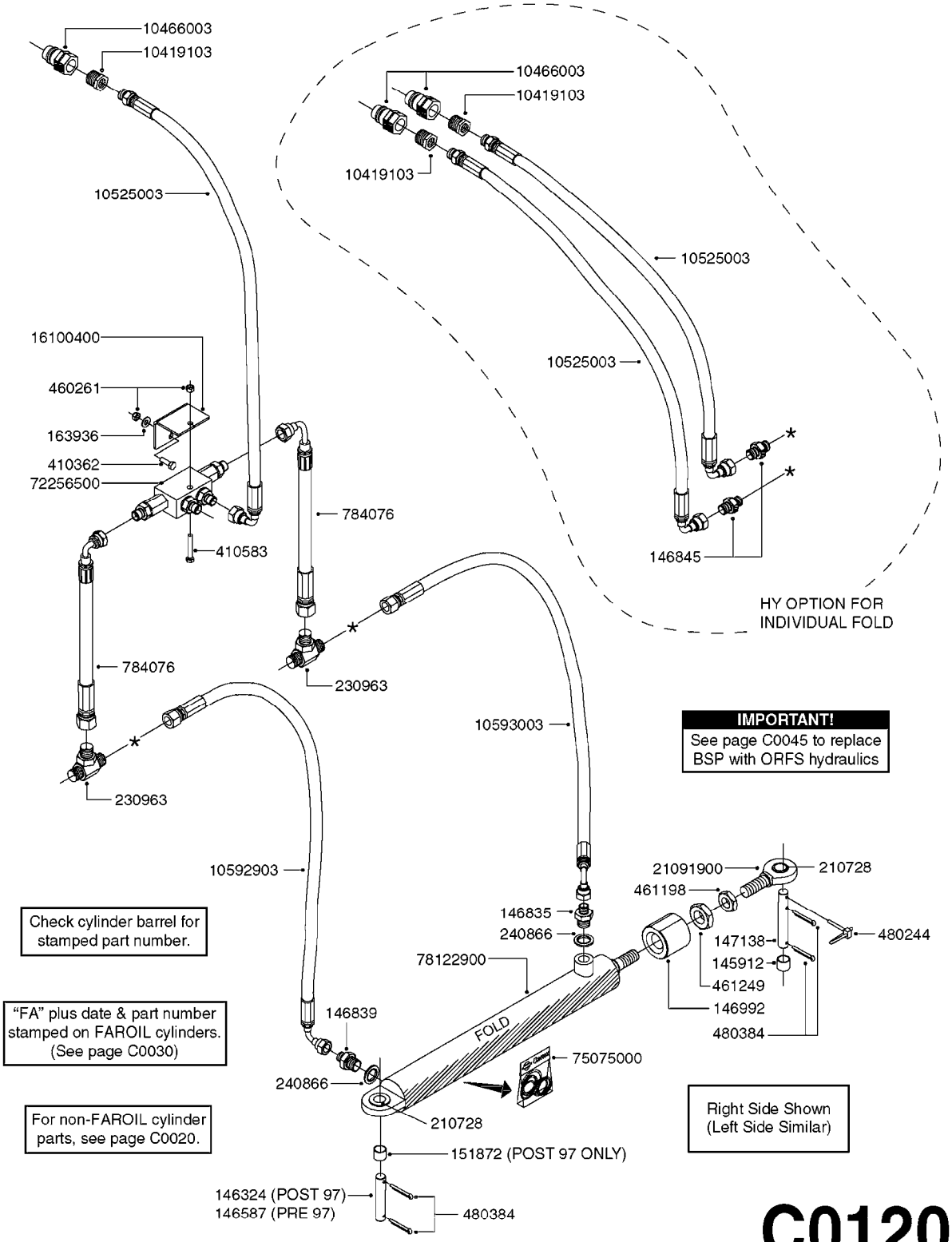

IMPORTANT!
See page C0045 to replace BSP with ORFS hydraulics

Check cylinder barrel for stamped part number.

"FA" plus date & part number stamped on FAROIL cylinders. (See page C0030)

For non-FAROIL cylinder parts, see page C0020.

Right Side Shown
(Left Side Similar)

C0120

Agroparts: www.HARDI-INTERNATIONAL.com

HYDRAULICS - 3PT EAGLE HY
C0120-HIN, 08:01:18

Date 12.08.2020 11:36

parts-n°	order qty	description
145912	1	BUSHING D19.8/D17.0X7MM
146324	1	SHAFT D16.8 L102/2 X 5
146587	1	PIN D16.8 X 65
146835	1	HEX NIPPLE 1/4" - 3/8" BSP
146839	1	HEX NIPPLE 1/4"X3/8" BSP 0.7MM
146845	1	HEX NIPPLE 1/4"X1/4"
146992	1	BUSHING F.CYLINDER
147138	1	PIN D16.8 X 90
151872	1	BUSHING D22.0/18.0 10MM
163936	1	WASHER D15/D6.2X1
210728	1	BEARING F.LINK HEAD M17
230963	1	TEE 1/4"M X 1/4"M X 1/4"M BSP
240866	1	DOWTYSEAL 3/8"
410362	1	BOLT HEX 8.8 SS M6X20
410583	1	BOLT HEX 8.8 DEL M6X40
460261	1	NUT HEX M6X1.00 LOCK DIN985 A2 SS
461198	1	NUT HEX M16X2 JAMB
461249	1	NUT M22X1.5 DIN439B
480244	1	PIN SNAP D4.5
480384	1	PIN COTTER 3/16 x 1-1/2"
784076	1	HOSE,HY,1/4" L=8.5" STR-ELB
10419103	1	FITT.HY HEX RED.3/8 X 1/2
10466003	1	COUPLER PIONEER 8010-04 1/2NPT
10525003	1	HOSE HY X1/4 X 177"STR&ELB
10592903	1	HOSE HY X1/4 X 108.00"STR+ELB
10593003	1	HOSE HY X1/4 X 114.00"STR+ELB
16100400	1	PLATE 3 X 60 X 91 HY BLOCK MT
21091900	1	LINK HEAD M16 x D17 DELTA
72256500	1	DOUB.PILOT STEERED COUNT.VALVE
75075000	1	SEAL KIT 78122600/27/28/29
78122900	1	CYLINDER 40/22X300MM RED

HYDRAULICS - 3PT EAGLE HT
C0130-HIN, 08:01:18

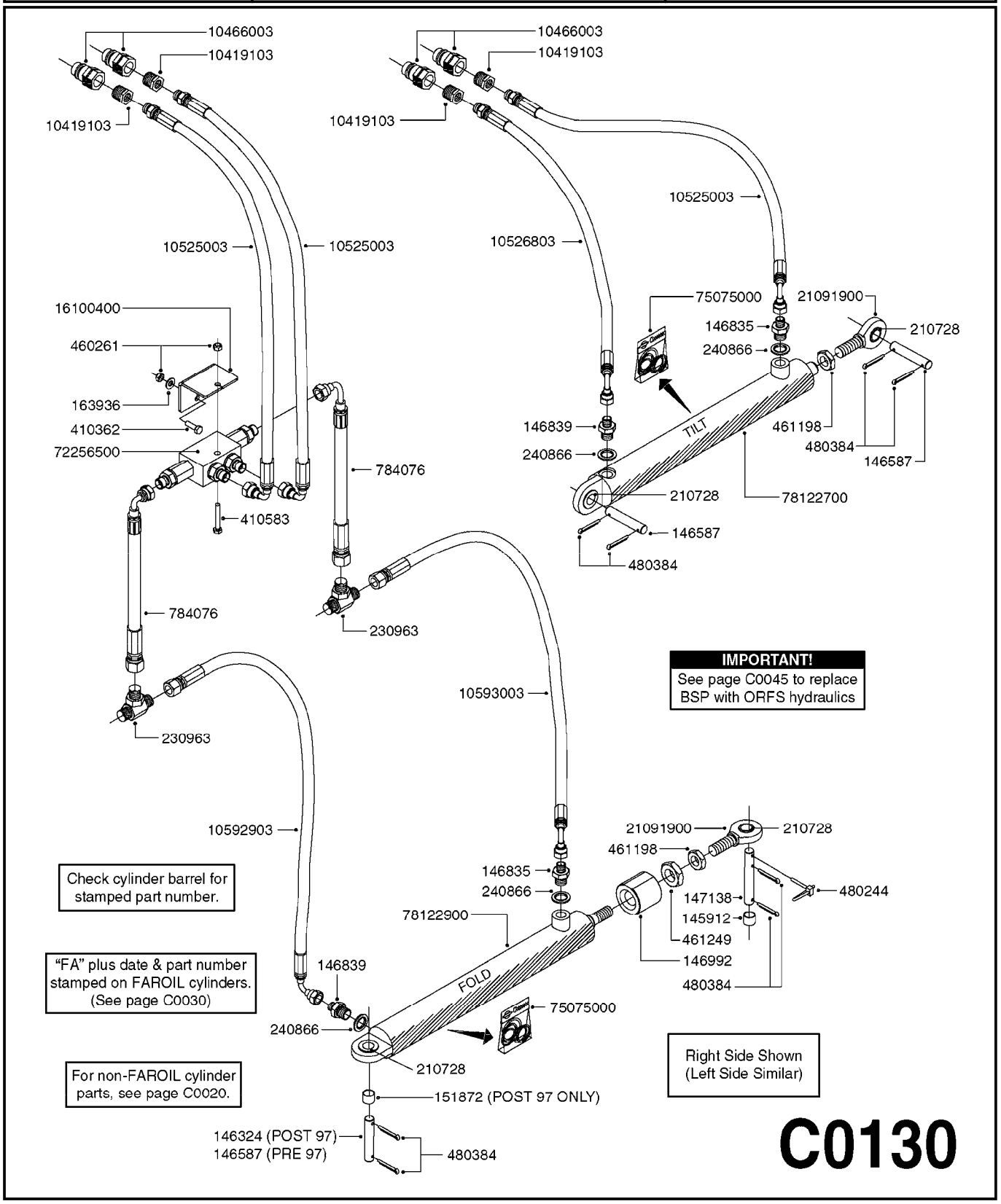

C0130

Agroparts: www.HARDI-INTERNATIONAL.com

HYDRAULICS - 3PT EAGLE HT
C0130-HIN, 08:01:18

Date 12.08.2020 11:36

parts-n°	order qty	description
145912	1	BUSHING D19.8/D17.0X7MM
146324	1	SHAFT D16.8 L102/2 X 5
146587	1	PIN D16.8 X 65
146835	1	HEX NIPPLE 1/4" - 3/8" BSP
146839	1	HEX NIPPLE 1/4"X3/8" BSP 0.7MM
146992	1	BUSHING F.CYLINDER
147138	1	PIN D16.8 X 90
151872	1	BUSHING D22.0/18.0 10MM
163936	1	WASHER D15/D6.2X1
210728	1	BEARING F.LINK HEAD M17
230963	1	TEE 1/4"M X 1/4"M X 1/4"M BSP
240866	1	DOWTYSEAL 3/8"
410362	1	BOLT HEX 8.8 SS M6X20
410583	1	BOLT HEX 8.8 DEL M6X40
460261	1	NUT HEX M6X1.00 LOCK DIN985 A2 SS
461198	1	NUT HEX M16X2 JAMB
461249	1	NUT M22X1.5 DIN439B
480244	1	PIN SNAP D4.5
480384	1	PIN COTTER 3/16 x 1-1/2"
784076	1	HOSE,HY,1/4" L=8.5" STR-ELB
10419103	1	FITT.HY HEX RED.3/8 X 1/2
10466003	1	COUPLER PIONEER 8010-04 1/2NPT
10525003	1	HOSE HY X1/4 X 177"STR&ELB
10526803	1	HOSE HY X 1/4 X 165"
10592903	1	HOSE HY X1/4 X 108.00"STR+ELB
10593003	1	HOSE HY X1/4 X 114.00"STR+ELB
16100400	1	PLATE 3 X 60 X 91 HY BLOCK MT
21091900	1	LINK HEAD M16 x D17 DELTA
72256500	1	DOUB.PILOT STEERED COUNT.VALVE
75075000	1	SEAL KIT 78122600/27/28/29
78122700	1	CYLINDER D40/22X300MM RED
78122900	1	CYLINDER 40/22X300MM RED

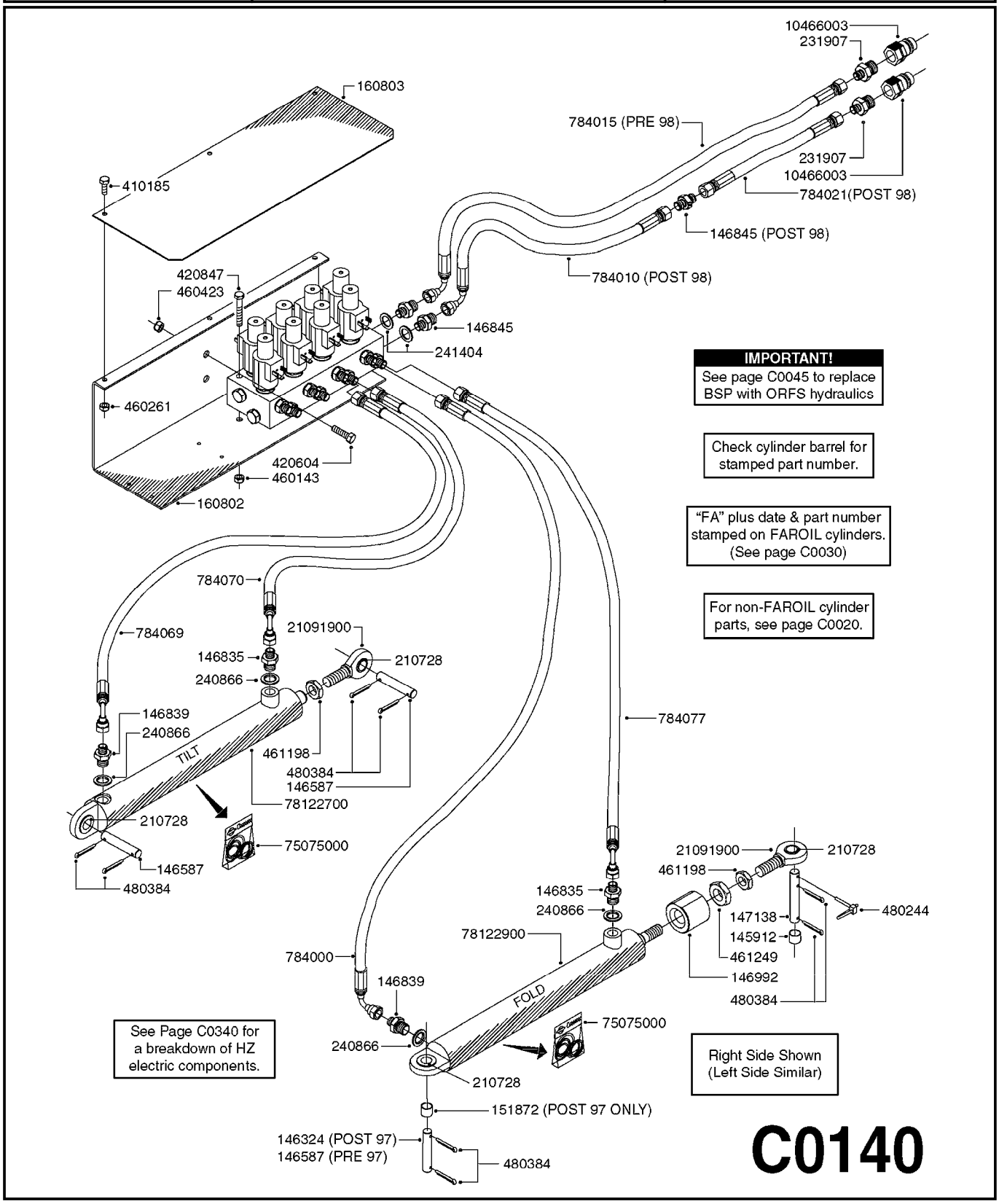
10466003
231907
160803
784015 (PRE 98)
231907
10466003
410185
784021(POST 98)
146845 (POST 98)
784010 (POST 98)
420847
460423
146845
241404
460261
420604
460143
160802
784070
784069
21091900
146835
210728
240866
146839
240866
TILT
461198
480384
146587
78122700
210728
75075000
146587
480384
784077
21091900
210728
461198
146835
240866
480244
147138
145912
461249
146992
480384
78122900
784000
146839
FOLD
75075000
240866
210728
151872 (POST 97 ONLY)
146324 (POST 97)
146587 (PRE 97)
480384
IMPORTANT!
See page C0045 to replace BSP with ORFS hydraulics
Check cylinder barrel for stamped part number.
"FA" plus date & part number stamped on FAROIL cylinders. (See page C0030)
For non-FAROIL cylinder parts, see page C0020.
See Page C0340 for a breakdown of HZ electric components.
Right Side Shown (Left Side Similar)
C0140

Agroparts: www.HARDI-INTERNATIONAL.com

HYDRAULICS - 3PT EAGLE HZ
C0140-HIN, 08:01:18

Date 12.08.2020 11:36

parts-n°	order qty	description
145912	1	BUSHING D19.8/D17.0X7MM
146324	1	SHAFT D16.8 L102/2 X 5
146587	1	PIN D16.8 X 65
146835	1	HEX NIPPLE 1/4" - 3/8" BSP
146839	1	HEX NIPPLE 1/4"X3/8" BSP 0.7MM
146845	1	HEX NIPPLE 1/4"X1/4"
146992	1	BUSHING F.CYLINDER
147138	1	PIN D16.8 X 90
151872	1	BUSHING D22.0/18.0 10MM
160802	1	MOUNT PLATE F.HYD SOLENOID'HZ'
160803	1	COVER PLATE F.HYD SOLENOID'HZ'
210728	1	BEARING F.LINK HEAD M17
231907	1	HEX NIPPLE 1/4"BSP X 1/2"NPT
240866	1	DOWTYSEAL 3/8"
241404	1	DOWTY SEAL 1/4"
410185	1	BOLT HEX 8.8 DEL M6X16
420604	1	BOLT HEX 8.8 DEL M10X25 FT DIN933
420847	1	BOLT HEX 8.8 DEL M8X85
460143	1	LOCK NUT M8 SST A2 DIN985
460261	1	NUT HEX M6X1.00 LOCK DIN985 A2 SS
460423	1	NUT HEX M10X1.50 LOCK DIN985A2 SS
461198	1	NUT HEX M16X2 JAMB
461249	1	NUT M22X1.5 DIN439B
480244	1	PIN SNAP D4.5
480384	1	PIN COTTER 3/16 x 1-1/2"
784000	1	HOSE HY X 1/4 X 118.00"STR+ELB
784010	1	HOSE HY X 1/4 X 149.5"STR+ELB
784015	1	HOSE HY X 1/4 X 210" STR-ELB
784021	1	HOSE HY X 1/4 X 064.96"STR+STR
784069	1	HOSE HY X 1/4 X 90.5" STR+ELB
784070	1	HOSE HY X 1/4 X 96.5" STR+ELB
784077	1	HOSE HY X 1/4 X 122.0" STR+ELB
10466003	1	COUPLER PIONEER 8010-04 1/2NPT
21091900	1	LINK HEAD M16 x D17 DELTA
75075000	1	SEAL KIT 78122600/27/28/29
78122700	1	CYLINDER D40/22X300MM RED
78122900	1	CYLINDER 40/22X300MM RED

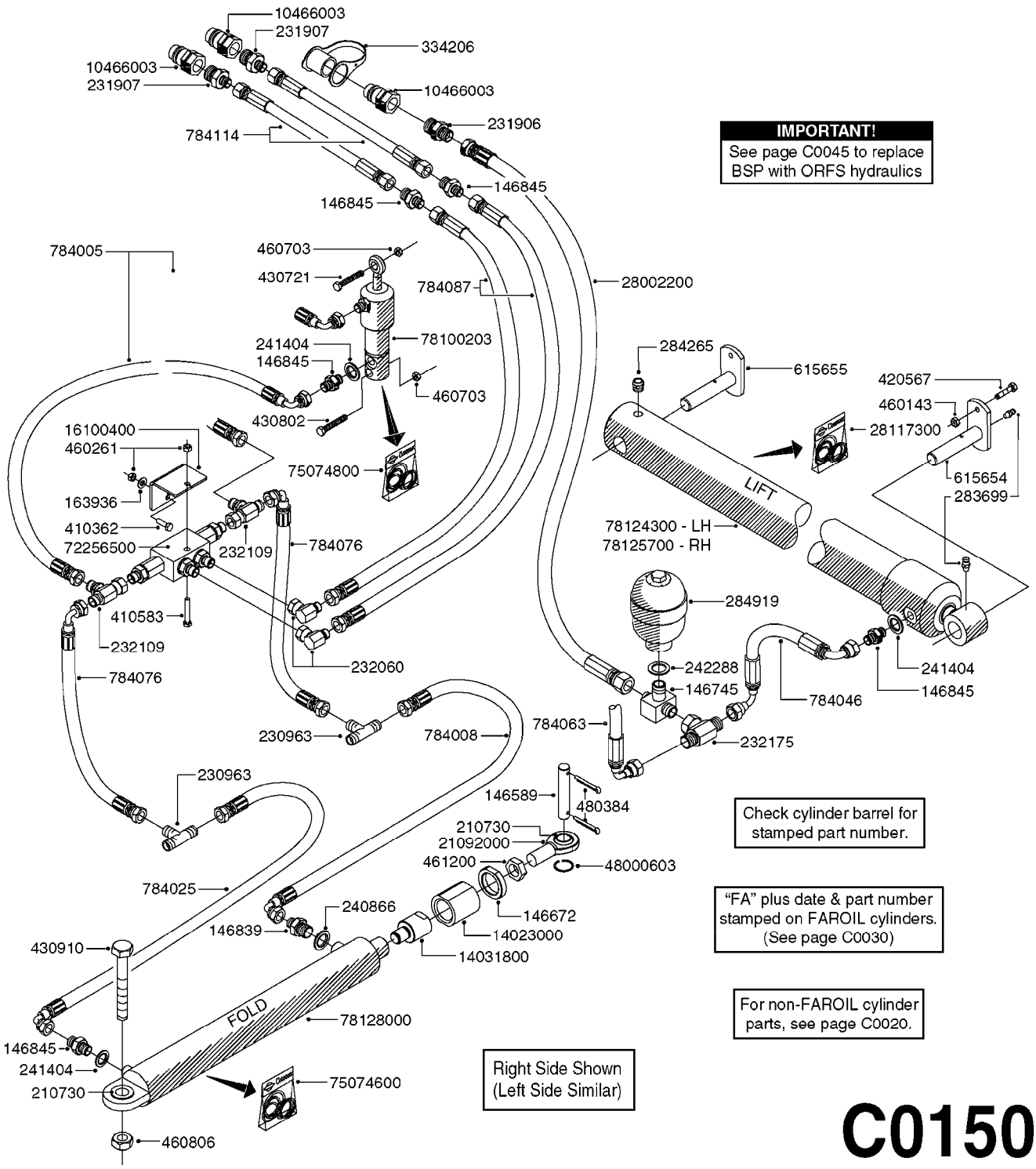

IMPORTANT!
See page C0045 to replace BSP with ORFS hydraulics

Check cylinder barrel for stamped part number.

"FA" plus date & part number stamped on FAROIL cylinders. (See page C0030)

For non-FAROIL cylinder parts, see page C0020.

Right Side Shown
(Left Side Similar)

C0150

Agroparts: www.HARDI-INTERNATIONAL.com

HYDRAULICS - DELTA 3PT SPC HY
C0150-HIN, 28:09:17

Date 12.08.2020 11:36

parts-n°	order qty	description
146589	1	PIN D19.8 X 65
146672	1	NUT HEX LOCK F.ADJUSTER
146745	1	TEE BLOCK M18X1.5-3/8"X1/4"
146839	1	HEX NIPPLE 1/4"X3/8" BSP 0.7MM
146845	1	HEX NIPPLE 1/4"X1/4"
163936	1	WASHER D15/D6.2X1
210730	1	BEARING F.LINK HEAD M20
230963	1	TEE 1/4"M X 1/4"M X 1/4"M BSP
231906	1	HEX NIPPLE 3/8"BSP X 1/2"NPT
231907	1	HEX NIPPLE 1/4"BSP X 1/2"NPT
232060	1	HY.ELBOW 1/4" BSP SWIVEL
232109	1	FITT.HY TEE 1/4"BSP UNION
232175	1	TEE 1/4"M X 1/4"F X 1/4"M BSP
240866	1	DOWTYSEAL 3/8"
241404	1	DOWTY SEAL 1/4"
242288	1	SEAL F. HYD ACCUMULATOR TWIN
283699	1	GREASE NIPPLE M6X1
284265	1	PLUG BREATHER 1/4" F/CYLINDER
284919	1	HYD. ACCUMULATOR F. CM875/1200
334206	1	DUST HOOD FOR HY-COUPLING
410362	1	BOLT HEX 8.8 SS M6X20
410583	1	BOLT HEX 8.8 DEL M6X40
420567	1	BOLT HEX 8.8 DEL M8X30 FT
430721	1	BOLT HEX 8.8 DEL M12X40 FT
430802	1	BOLT HEX 8.8 DEL M12X75
430910	1	BOLT HEX 8.8 DEL M20X110
460143	1	LOCK NUT M8 SST A2 DIN985
460261	1	NUT HEX M6X1.00 LOCK DIN985 A2 SS
460703	1	NUT HEX M12X1.75 LOCK DIN985A2 SS
460806	1	NUT HEX M20X2.50 LOCK DIN985A2 SS
461200	1	NUT HEX M20X1.5 JAMB.
480384	1	PIN COTTER 3/16 x 1-1/2"
615654	1	PIN D25 X 123 F. PARALIFT
615655	1	PIN D25 X 156 F. PARALIFT
784005	1	HOSE HY X 1/4 X 037.38"STR+ELB
784008	1	HOSE HY X 1/4" X 98.4"STR+ELB
784025	1	HOSE HY X 1/4" x 86.6"STR+ELB
784046	1	HOSE HY 1/4"x49.2"ELB+ELB/180°
784063	1	HOSE HY X 1/4 X 086.62"ELB+ELB
784076	1	HOSE,HY,1/4" L=8.5" STR-ELB
784087	1	HOSE HY X 1/4 X 126.00"STR+STR
784114	1	HOSE HY X 1/4 X 80.7" STR+STR
10466003	1	COUPLER PIONEER 8010-04 1/2NPT
14023000	1	BUSHING Ø50.0/36.0 L=52 DEL
14031800	1	ADAPTOR F.HY CYLINDER L=40
16100400	1	PLATE 3 X 60 X 91 HY BLOCK MT
21092000	1	LINK HEAD M20 x D20 L=78 DELTA
28002200	1	HY HOSE 3/8" X 70.9" STR+STR
28117300	1	SEAL KIT 78120600/07/43
48000603	1	SNAP RING, Ø36X1.5 F.210730
72256500	1	DOUB.PILOT STEERED COUNT.VALVE
75074600	1	SEAL KIT 78120500/49
75074800	1	SEAL KIT 78123400/42
78100203	1	CYL. D25/12-50/72531000 W/BSP ADAPT
78124300	1	CYLINDER 60/25 X 635 DELTA L
78125700	1	CYLINDER 60/25 X 635 DELTA R
78128000	1	CYLINDER DOUB. D60/30 L=300 09

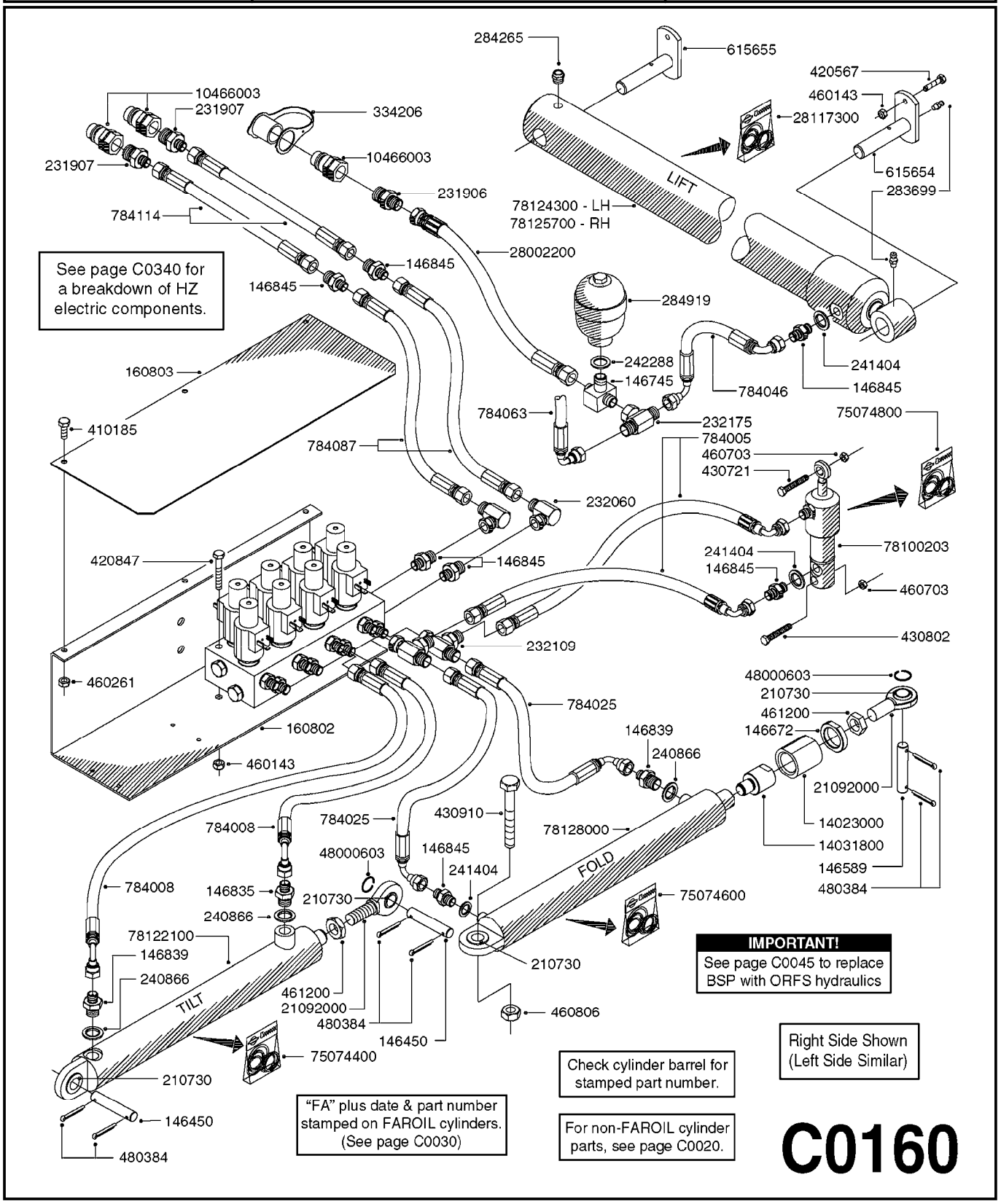
284265
615655
420567
460143
28117300
10466003
231907
334206
10466003
231907
231906
615654
283699
LIFT
78124300 - LH
78125700 - RH
784114
28002200
146845
146845
See page C0340 for a breakdown of HZ electric components.
284919
242288
146745
241404
146845
784046
160803
410185
784063
232175
75074800
784005
460703
430721
784087
232060
78100203
420847
146845
241404
146845
460703
430802
232109
460261
48000603
210730
461200
146672
784025
160802
146839
240866
460143
21092000
14023000
14031800
146589
480384
784008
784025
430910
78128000
48000603
146845
241404
FOLD
784008
146835
210730
240866
75074600
78122100
146839
240866
210730
TILT
461200
21092000
480384
460806
146450
75074400
210730
146450
480384
IMPORTANT!
See page C0045 to replace BSP with ORFS hydraulics
Right Side Shown (Left Side Similar)
Check cylinder barrel for stamped part number.
"FA" plus date & part number stamped on FAROIL cylinders. (See page C0030)
For non-FAROIL cylinder parts, see page C0020.

C0160

Agroparts: www.HARDI-INTERNATIONAL.com

HYDRAULICS - DELTA 3PT SPC HZ
C0160-HIN, 28:09:17

Date 12.08.2020 11:36

parts-n°	order qty	description
146450	1	PIN D19.8 X 75 WITH 2 X D5
146589	1	PIN D19.8 X 65
146672	1	NUT HEX LOCK F.ADJUSTER
146745	1	TEE BLOCK M18X1.5-3/8"X1/4"
146835	1	HEX NIPPLE 1/4" - 3/8" BSP
146839	1	HEX NIPPLE 1/4"X3/8" BSP 0.7MM
146845	1	HEX NIPPLE 1/4"X1/4"
160802	1	MOUNT PLATE F.HYD SOLENOID'HZ'
160803	1	COVER PLATE F.HYD SOLENOID'HZ'
210730	1	BEARING F.LINK HEAD M20
231906	1	HEX NIPPLE 3/8"BSP X 1/2"NPT
231907	1	HEX NIPPLE 1/4"BSP X 1/2"NPT
232060	1	HY.ELBOW 1/4" BSP SWIVEL
232109	1	FITT.HY TEE 1/4"BSP UNION
232175	1	TEE 1/4"M X 1/4"F X 1/4"M BSP
240866	1	DOWTYSEAL 3/8"
241404	1	DOWTY SEAL 1/4"
242288	1	SEAL F. HYD ACCUMULATOR TWIN
283699	1	GREASE NIPPLE M6X1
284265	1	PLUG BREATHER 1/4" F/CYLINDER
284919	1	HYD. ACCUMULATOR F. CM875/1200
334206	1	DUST HOOD FOR HY-COUPLING
410185	1	BOLT HEX 8.8 DEL M6X16
420567	1	BOLT HEX 8.8 DEL M8X30 FT
420847	1	BOLT HEX 8.8 DEL M8X85
430721	1	BOLT HEX 8.8 DEL M12X40 FT
430802	1	BOLT HEX 8.8 DEL M12X75
430910	1	BOLT HEX 8.8 DEL M20X110
460143	1	LOCK NUT M8 SST A2 DIN985
460261	1	NUT HEX M6X1.00 LOCK DIN985 A2 SS
460703	1	NUT HEX M12X1.75 LOCK DIN985A2 SS
460806	1	NUT HEX M20X2.50 LOCK DIN985A2 SS
461200	1	NUT HEX M20X1.5 JAMB.
480384	1	PIN COTTER 3/16 x 1-1/2"
615654	1	PIN D25 X 123 F. PARALIFT
615655	1	PIN D25 X 156 F. PARALIFT
784005	1	HOSE HY X 1/4 X 037.38"STR+ELB
784008	1	HOSE HY X 1/4" X 98.4"STR+ELB
784025	1	HOSE HY X 1/4" x 86.6"STR+ELB
784046	1	HOSE HY 1/4"x49.2"ELB+ELB/180°
784063	1	HOSE HY X 1/4 X 086.62"ELB+ELB
784087	1	HOSE HY X 1/4 X 126.00"STR+STR
784114	1	HOSE HY X 1/4 X 80.7" STR+STR
10466003	1	COUPLER PIONEER 8010-04 1/2NPT
14023000	1	BUSHING Ø50.0/36.0 L=52 DEL
14031800	1	ADAPTOR F.HY CYLINDER L=40
21092000	1	LINK HEAD M20 x D20 L=78 DELTA
28002200	1	HY HOSE 3/8" X 70.9" STR+STR
28117300	1	SEAL KIT 78120600/07/43
48000603	1	SNAP RING, Ø36X1.5 F.210730
75074400	1	SEAL KIT 78121800/21/44
75074600	1	SEAL KIT 78120500/49
75074800	1	SEAL KIT 78123400/42
78100203	1	CYL. D25/12-50/72531000 W/BSP ADAPT
78122100	1	CYLINDER DOUBLE D50/25-298
78124300	1	CYLINDER 60/25 X 635 DELTA L
78125700	1	CYLINDER 60/25 X 635 DELTA R
78128000	1	CYLINDER DOUB. D60/30 L=300 09

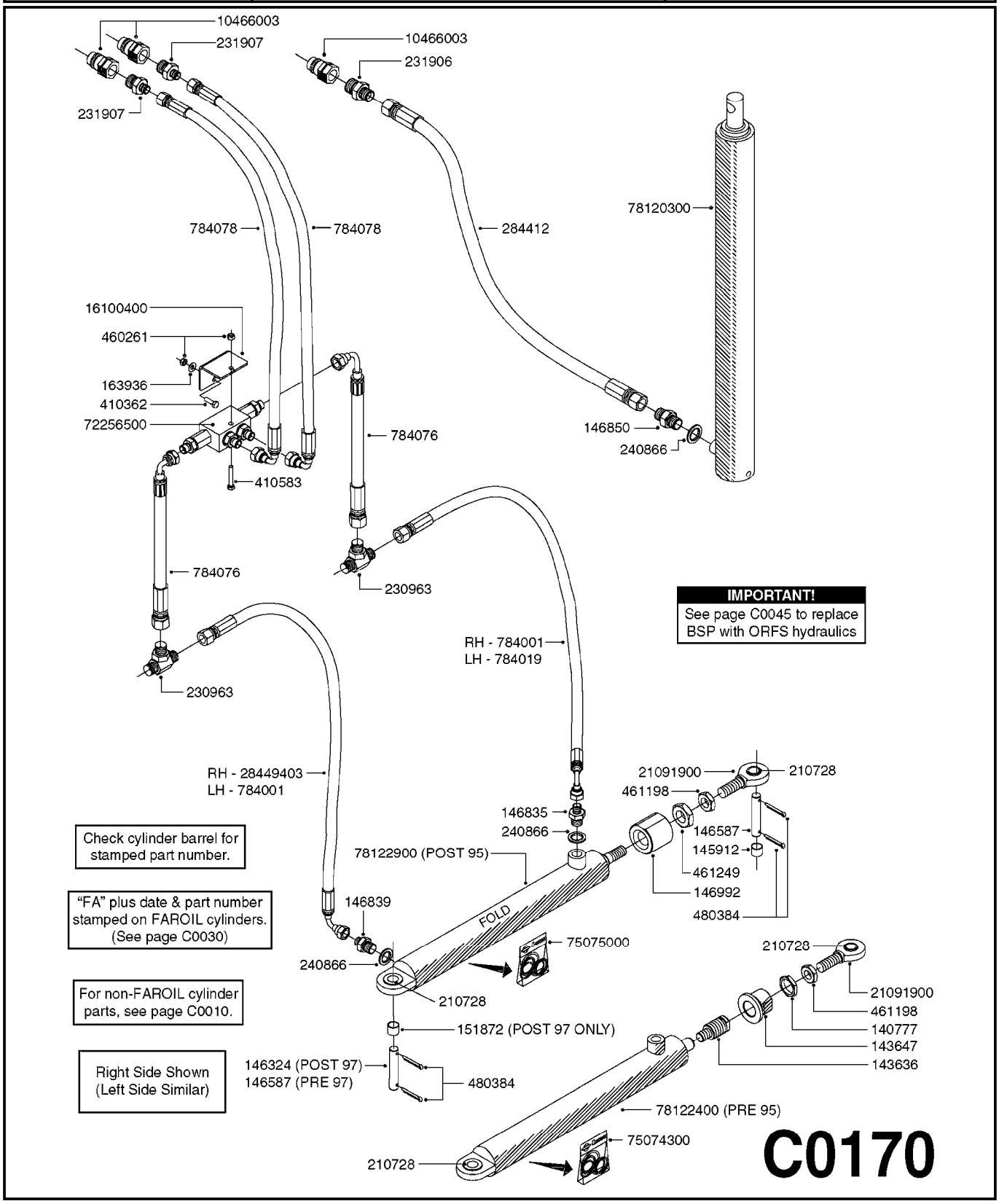
10466003
231907
10466003
231906
231907
78120300
784078
784078
284412
16100400
460261
163936
410362
72256500
784076
146850
240866
410583
784076
230963
IMPORTANT!
See page C0045 to replace BSP with ORFS hydraulics
RH - 784001
LH - 784019
230963
RH - 28449403
LH - 784001
21091900
210728
461198
146835
240866
146587
145912
78122900 (POST 95)
461249
146992
480384
Check cylinder barrel for stamped part number.
"FA" plus date & part number stamped on FAROIL cylinders. (See page C0030)
146839
FOLD
75075000
240866
210728
For non-FAROIL cylinder parts, see page C0010.
151872 (POST 97 ONLY)
210728
21091900
461198
140777
143647
143636
Right Side Shown (Left Side Similar)
146324 (POST 97)
146587 (PRE 97)
480384
78122400 (PRE 95)
75074300
210728
C0170

Agroparts: www.HARDI-INTERNATIONAL.com

HYDRAULICS - EAGLE HY 45'-66'
C0170-HIN, 08:01:18

Date 12.08.2020 11:36

parts-n°	order qty	description
140777	1	NUT HEX 3/4" BSP JAMB
143636	1	THREADED INSERT F.CYLINDER END
143647	1	COLLAR F.THREAD.ROD EXTENTON
145912	1	BUSHING D19.8/D17.0X7MM
146324	1	SHAFT D16.8 L102/2 X 5
146587	1	PIN D16.8 X 65
146835	1	HEX NIPPLE 1/4" - 3/8" BSP
146839	1	HEX NIPPLE 1/4"X3/8" BSP 0.7MM
146850	1	HEX NIPPLE 3/8"x3/8" - 1.8mm
146992	1	BUSHING F.CYLINDER
151872	1	BUSHING D22.0/18.0 10MM
163936	1	WASHER D15/D6.2X1
210728	1	BEARING F.LINK HEAD M17
230963	1	TEE 1/4"M X 1/4"M X 1/4"M BSP
231906	1	HEX NIPPLE 3/8"BSP X 1/2"NPT
231907	1	HEX NIPPLE 1/4"BSP X 1/2"NPT
240866	1	DOWTYSEAL 3/8"
284412	1	HOSE HY 3/8" X 315" STR+STR
410362	1	BOLT HEX 8.8 SS M6X20
410583	1	BOLT HEX 8.8 DEL M6X40
460261	1	NUT HEX M6X1.00 LOCK DIN985 A2 SS
461198	1	NUT HEX M16X2 JAMB
461249	1	NUT M22X1.5 DIN439B
480384	1	PIN COTTER 3/16 x 1-1/2"
784001	1	HOSE HY X 1/4 X 067.00"STR+ELB
784019	1	HOSE HY X 1/4 X 078.75"STR+ELB
784076	1	HOSE,HY,1/4" L=8.5" STR-ELB
784078	1	HOSE HY X 1/4 X 417.33"STR+ELB
10466003	1	COUPLER PIONEER 8010-04 1/2NPT
16100400	1	PLATE 3 X 60 X 91 HY BLOCK MT
21091900	1	LINK HEAD M16 x D17 DELTA
28449403	1	HOSE HY X1/4X057.08"STR+ELB
72256500	1	DOUB.PILOT STEERED COUNT.VALVE
75074300	1	SEALKIT78122000/23-25/30-32/46
75075000	1	SEAL KIT 78122600/27/28/29
78120300	1	CYLINDER 60/50/30 1100MM
78122400	1	DOUBLE CYLINDER D 40/20-300
78122900	1	CYLINDER 40/22X300MM RED

HYDRAULICS-EAGLE HY 45'-66'NN
C0180-HIN, 08:01:18

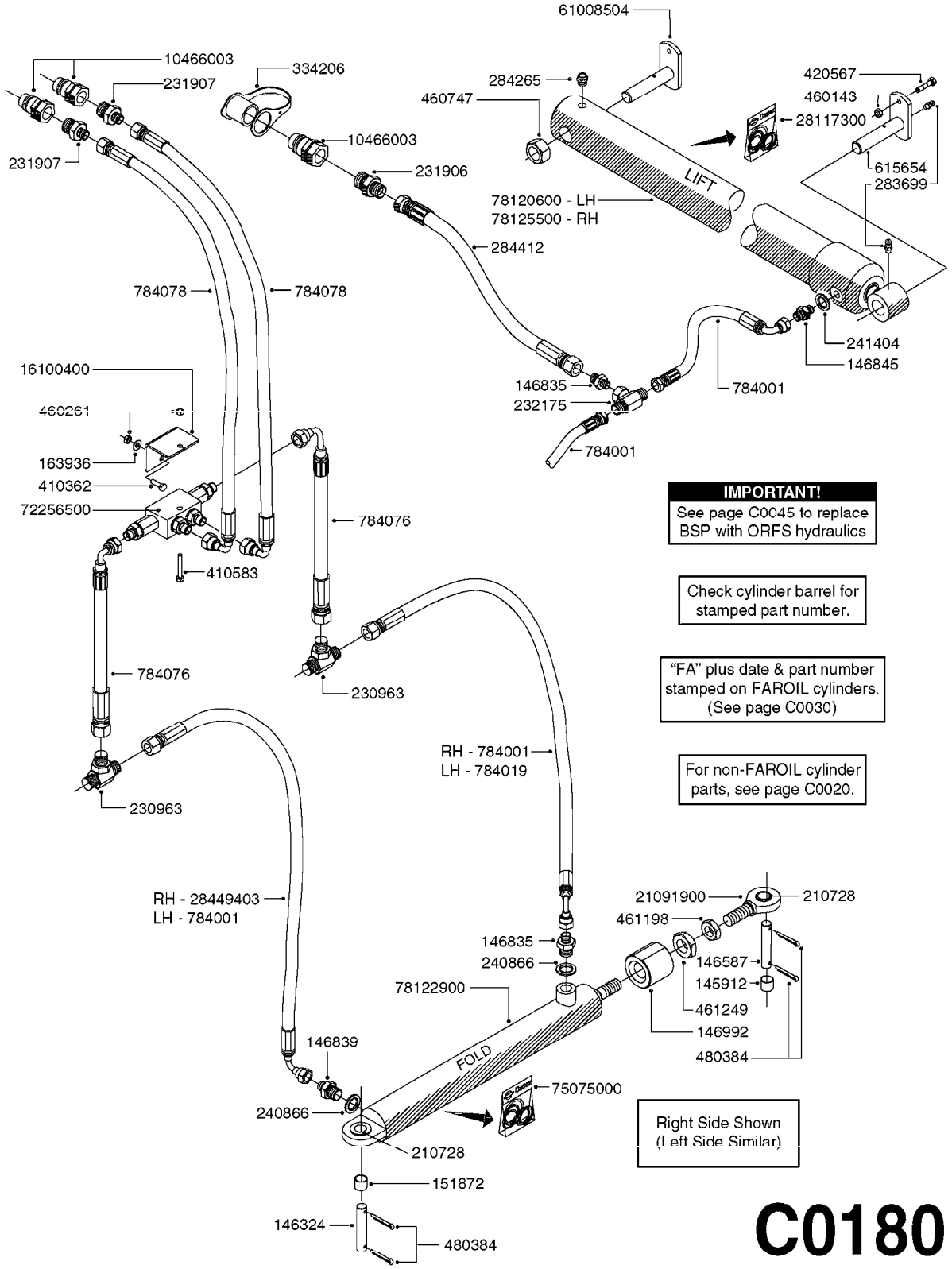

IMPORTANT!
See page C0045 to replace BSP with ORFS hydraulics

Check cylinder barrel for stamped part number.

"FA" plus date & part number stamped on FAROIL cylinders. (See page C0030)

For non-FAROIL cylinder parts, see page C0020.

Right Side Shown
(Left Side Similar)

C0180

Agroparts: www.HARDI-INTERNATIONAL.com

HYDRAULICS-EAGLE HY 45'-66'NN
C0180-HIN, 08:01:18

Date 12.08.2020 11:36

parts-n°	order qty	description
145912	1	BUSHING D19.8/D17.0X7MM
146324	1	SHAFT D16.8 L102/2 X 5
146587	1	PIN D16.8 X 65
146835	1	HEX NIPPLE 1/4" - 3/8" BSP
146839	1	HEX NIPPLE 1/4"X3/8" BSP 0.7MM
146845	1	HEX NIPPLE 1/4"X1/4"
146992	1	BUSHING F.CYLINDER
151872	1	BUSHING D22.0/18.0 10MM
163936	1	WASHER D15/D6.2X1
210728	1	BEARING F.LINK HEAD M17
230963	1	TEE 1/4"M X 1/4"M X 1/4"M BSP
231906	1	HEX NIPPLE 3/8"BSP X 1/2"NPT
231907	1	HEX NIPPLE 1/4"BSP X 1/2"NPT
232175	1	TEE 1/4"M X 1/4"F X 1/4"M BSP
240866	1	DOWTYSEAL 3/8"
241404	1	DOWTY SEAL 1/4"
283699	1	GREASE NIPPLE M6X1
284265	1	PLUG BREATHER 1/4" F/CYLINDER
284412	1	HOSE HY 3/8" X 315" STR+STR
334206	1	DUST HOOD FOR HY-COUPLING
410362	1	BOLT HEX 8.8 SS M6X20
410583	1	BOLT HEX 8.8 DEL M6X40
420567	1	BOLT HEX 8.8 DEL M8X30 FT
460143	1	LOCK NUT M8 SST A2 DIN985
460261	1	NUT HEX M6X1.00 LOCK DIN985 A2 SS
460747	1	NUT HEX M24 LOCK
461198	1	NUT HEX M16X2 JAMB
461249	1	NUT M22X1.5 DIN439B
480384	1	PIN COTTER 3/16 x 1-1/2"
615654	1	PIN D25 X 123 F. PARALIFT
784001	1	HOSE HY X 1/4 X 067.00"STR+ELB
784019	1	HOSE HY X 1/4 X 078.75"STR+ELB
784076	1	HOSE,HY,1/4" L=8.5" STR-ELB
784078	1	HOSE HY X 1/4 X 417.33"STR+ELB
10466003	1	COUPLER PIONEER 8010-04 1/2NPT
16100400	1	PLATE 3 X 60 X 91 HY BLOCK MT
21091900	1	LINK HEAD M16 x D17 DELTA
28117300	1	SEAL KIT 78120600/07/43
28449403	1	HOSE HY X1/4X057.08"STR+ELB
61008504	1	MOUNTING BOLT Ø25X98/M24
72256500	1	DOUB.PILOT STEERED COUNT.VALVE
75075000	1	SEAL KIT 78122600/27/28/29
78120600	1	CYLINDER 60/25 X 662 NAV PAR L
78122900	1	CYLINDER 40/22X300MM RED
78125500	1	CYLINDER 60/25 X 662 NAV PAR R

HYDRAULICS-EAG.HY 45-66'RANGER
C0190-HIN, 08:10:18

Date 12.08.2020 11:36

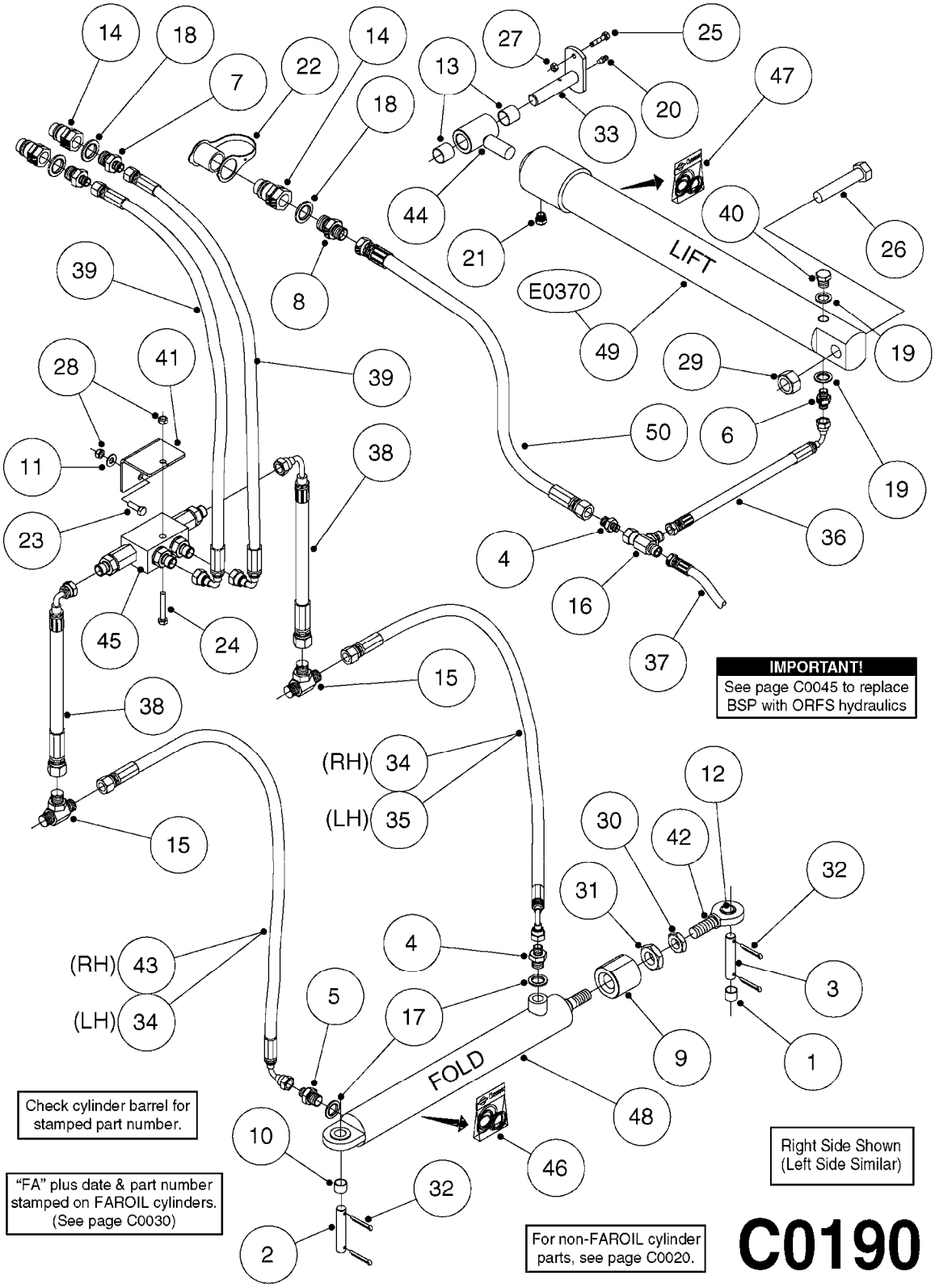

C0190

Agroparts: www.HARDI-INTERNATIONAL.com

HYDRAULICS-EAG.HY 45-66'RANGER
C0190-HIN, 08:10:18

Date 12.08.2020 11:36

Pos.	parts-nº	order qty	description
1	145912	1	BUSHING D19.8/D17.0X7MM
2	146324	1	SHAFT D16.8 L102/2 X 5
3	146587	1	PIN D16.8 X 65
4	146835	1	HEX NIPPLE 1/4" - 3/8" BSP
5	146839	1	HEX NIPPLE 1/4"X3/8" BSP 0.7MM
6	146845	1	HEX NIPPLE 1/4"X1/4"
7	146846	1	HEX NIPPLE 1/2" X 1/4"
8	146847	1	HEX NIPPLE 1/2"X3/8"
9	146992	1	BUSHING F.CYLINDER
10	151872	1	BUSHING D22.0/18.0 10MM
11	163936	1	WASHER D15/D6.2X1
12	210728	1	BEARING F.LINK HEAD M17
13	210835	1	BUSHING D28/25 L=25
14	230311	1	QUICK COUPLING 1/2"
15	230963	1	TEE 1/4"M X 1/4"M X 1/4"M BSP
16	232109	1	FITT.HY TEE 1/4"BSP UNION
17	240866	1	DOWTYSEAL 3/8"
18	241356	1	DOWTYSEAL 1/2"
19	241404	1	DOWTY SEAL 1/4"
20	283699	1	GREASE NIPPLE M6X1
21	284265	1	PLUG BREATHER 1/4" F/CYLINDER
22	334206	1	DUST HOOD FOR HY-COUPLING
23	410362	1	BOLT HEX 8.8 SS M6X20
24	410583	1	BOLT HEX 8.8 DEL M6X40
25	420567	1	BOLT HEX 8.8 DEL M8X30 FT
26	430918	1	M20X100 DIN 931-8.8 DEL
27	460143	1	LOCK NUT M8 SST A2 DIN985
28	460261	1	NUT HEX M6X1.00 LOCK DIN985 A2 SS
29	460806	1	NUT HEX M20X2.50 LOCK DIN985A2 SS
30	461198	1	NUT HEX M16X2 JAMB
31	461249	1	NUT M22X1.5 DIN439B
32	480384	1	PIN COTTER 3/16 x 1-1/2"
33	615654	1	PIN D25 X 123 F. PARALIFT
34	784001	1	HOSE HY X 1/4 X 067.00"STR+ELB
35	784019	1	HOSE HY X 1/4 X 078.75"STR+ELB
36	784037	1	HOSE HY X 1/4" x 130"STR+ELB
37	784069	1	HOSE HY X 1/4 X 90.5" STR+ELB
38	784076	1	HOSE,HY,1/4" L=8.5" STR-ELB
39	784078	1	HOSE HY X 1/4 X 417.33"STR+ELB
40	14010400	1	PLUG 1/4" BSP
41	16100400	1	PLATE 3 X 60 X 91 HY BLOCK MT
42	21091900	1	LINK HEAD M16 x D17 DELTA
43	28449403	1	HOSE HY X1/4X057.08"STR+ELB
44	61011803	1	ROD END M24X2 25M 06'07'
45	72256500	1	DOUB.PILOT STEERED COUNT.VALVE
46	75075000	1	SEAL KIT 78122600/27/28/29
47	75075200	1	SEAL KIT 78120900/14/50
48	78122900	1	CYLINDER 40/22X300MM RED
49	78128800	1	CYLINDER, D50/30-500
50	78563000	1	HY.HO.3/8"L= 6150 STR-STR

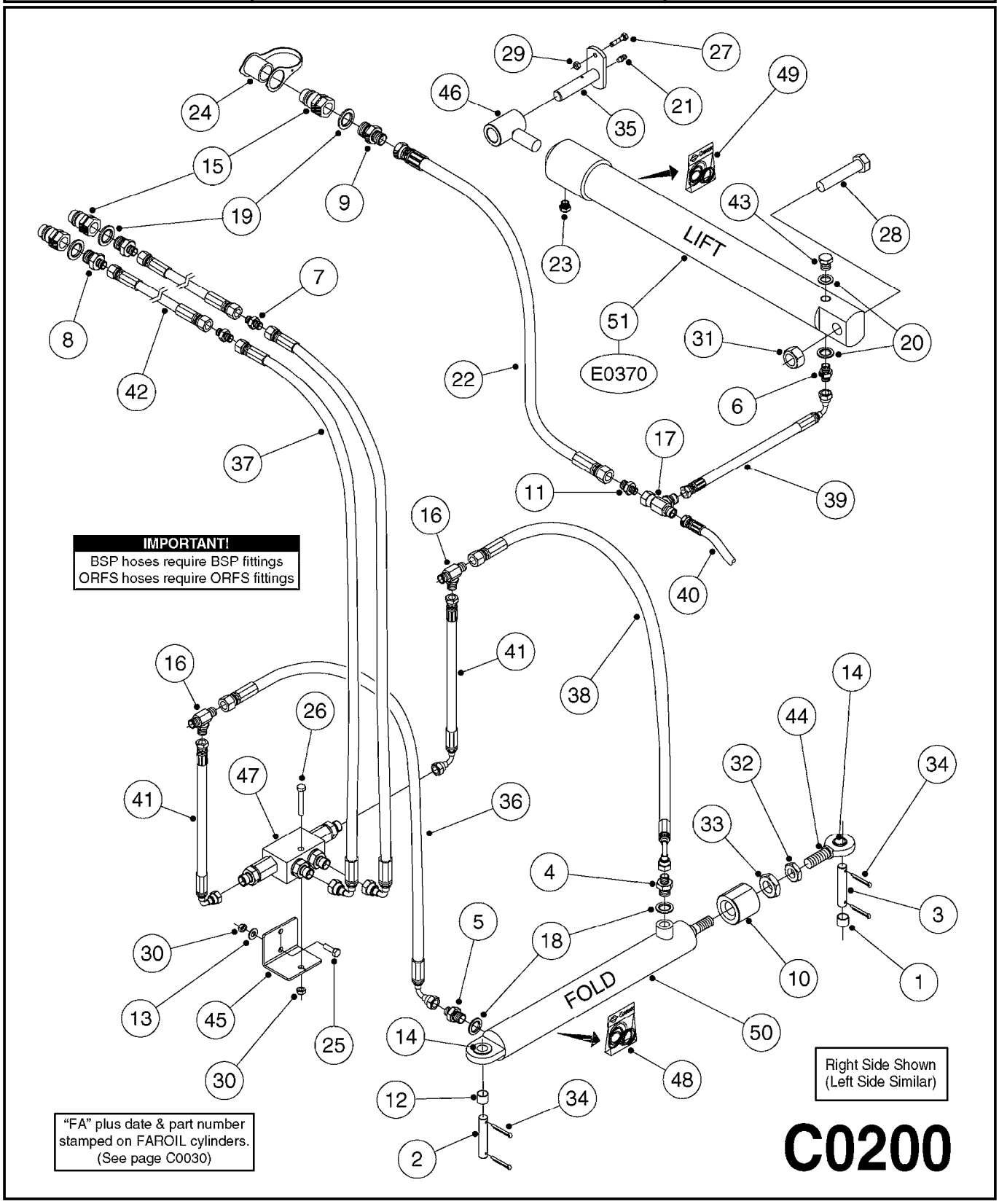
LIFT
FOLD
E0370
IMPORTANT!
BSP hoses require BSP fittings
ORFS hoses require ORFS fittings
Right Side Shown
(Left Side Similar)
"FA" plus date & part number stamped on FAROIL cylinders.
(See page C0030)
C0200

Agroparts: www.HARDI-INTERNATIONAL.com

HYDRAULICS-EAG.HY RANGER 2011
C0200-HIN, 08:01:18

Date 12.08.2020 11:36

Pos.	parts-nº	order qty	description
1	145912	1	BUSHING D19.8/D17.0X7MM
2	146324	1	SHAFT D16.8 L102/2 X 5
3	146587	1	PIN D16.8 X 65
4	146835	1	HEX NIPPLE 1/4" - 3/8" BSP BSP
4	23235700	1	HEX NIPPLE 3/8"-9/16" ORFS
5	146839	1	HEX NIPPLE 1/4"X3/8" BSP 0.7MM BSP
5	23235800	1	HEX NIPPLE 3/8"-9/16" - 0.7mm ORFS
6	146845	1	HEX NIPPLE 1/4"X1/4" BSP
6	23234500	1	HEX NIPPLE 1/4" - 9/16" ORFS
7	146845	1	HEX NIPPLE 1/4"X1/4" BSP
7	23239600	1	HEX NIPPLE 9/16"-9/16" ORFS
8	146846	1	HEX NIPPLE 1/2" X 1/4" BSP
8	23234800	1	HEX NIPPLE 1/2"-9/16" ORFS
9	146847	1	HEX NIPPLE 1/2"X3/8" BSP
9	23234900	1	HEX NIPPLE 1/2"-11/16" ORFS
10	146992	1	BUSHING F.CYLINDER
11	147061	1	HEX NIPPLE 1/4"X3/8"/1.8 BSP
11	23235200	1	HEX NIPPLE 1/4"-11/16" - 1.8mm ORFS
12	151872	1	BUSHING D22.0/18.0 10MM
13	163936	1	WASHER D15/D6.2X1
14	210728	1	BEARING F.LINK HEAD M17
15	230311	1	QUICK COUPLING 1/2"
16	230963	1	TEE 1/4"M X 1/4"M X 1/4"M BSP BSP
16	23240400	1	TEE 9/16"-9/16"-9/16" ORFS ORFS
17	232109	1	FITT.HY TEE 1/4"BSP UNION BSP
17	23231700	1	TEE 9/16"M-9/16"M-1/4"F ORFS ORFS
18	240866	1	DOWTYSEAL 3/8"
19	241356	1	DOWTYSEAL 1/2"
20	241404	1	DOWTY SEAL 1/4"
21	283699	1	GREASE NIPPLE M6X1
22	284141	1	HYD HOSE 3/8" L=6000 STR.+STR BSP
22	78563000	1	HY.HO.3/8"L= 6150 STR-STR ORFS
23	284265	1	PLUG BREATHER 1/4" F/CYLINDER
24	334206	1	DUST HOOD FOR HY-COUPLING
25	410362	1	BOLT HEX 8.8 SS M6X20
26	410583	1	BOLT HEX 8.8 DEL M6X40
27	420567	1	BOLT HEX 8.8 DEL M8X30 FT
28	430918	1	M20X100 DIN 931-8.8 DEL
29	460143	1	LOCK NUT M8 SST A2 DIN985
30	460261	1	NUT HEX M6X1.00 LOCK DIN985 A2 SS

Pos.	parts-n°	order qty	description
31	460806	1	NUT HEX M20X2.50 LOCK DIN985A2 SS
32	461198	1	NUT HEX M16X2 JAMB
33	461249	1	NUT M22X1.5 DIN439B
34	480384	1	PIN COTTER 3/16 x 1-1/2"
35	615654	1	PIN D25 X 123 F. PARALIFT
36	784001	1	HOSE HY X 1/4 X 067.00"STR+ELB BSP
36	78500200	1	HY.HO.1/4"L= 1700 STR-90° ORFS
37	784015	1	HOSE HY X 1/4 X 210" STR-ELB RANGER 550 (BSP)
37	78501403	1	HY.HO.1/4"L= 5330 STR-90° RANGER 550 (ORFS)
37	784049	1	HOSE HY X 1/4" X 240"STR+ELB RANGER 2000 (BSP)
37	78503700	1	HYDR. HOSE. 1/4"L= 6350 STR-90° RANGER 2000 (ORFS)
38	784019	1	HOSE HY X 1/4 X 078.75"STR+ELB BSP
38	78501500	1	HY.HO.1/4"L= 2000 STR-90° ORFS
39	784037	1	HOSE HY X 1/4" x 130"STR+ELB BSP
39	78501503	1	HY.HO.1/4"L= 3300 STR-90° ORFS
40	784069	1	HOSE HY X 1/4 X 90.5" STR+ELB BSP
40	78505000	1	HY.HO.1/4"L= 2300 STR-90° ORFS
41	784076	1	HOSE,HY,1/4" L=8.5" STR-ELB BSP
41	78505400	1	HY.HO.1/4"L= 215 STR-90° ORFS
42	784087	1	HOSE HY X 1/4 X 126.00"STR+STR BSP
42	78505600	1	HY.HO.1/4"L= 3200 STR-STR ORFS
43	14010400	1	PLUG 1/4" BSP
44	21091900	1	LINK HEAD M16 x D17 DELTA
45	16100400	1	PLATE 3 X 60 X 91 HY BLOCK MT
46	61011803	1	ROD END M24X2 25M 06'07'
47	72256500	1	DOUB.PILOT STEERED COUNT.VALVE
48	75075000	1	SEAL KIT 78122600/27/28/29
49	75075200	1	SEAL KIT 78120900/14/50
50	78122900	1	CYLINDER 40/22X300MM RED
51	78128800	1	CYLINDER, D50/30-500

HYDRAULICS HZ - RANGER 2000
C0210-HIN, 13:05:19

Date 12.08.2020 11:36

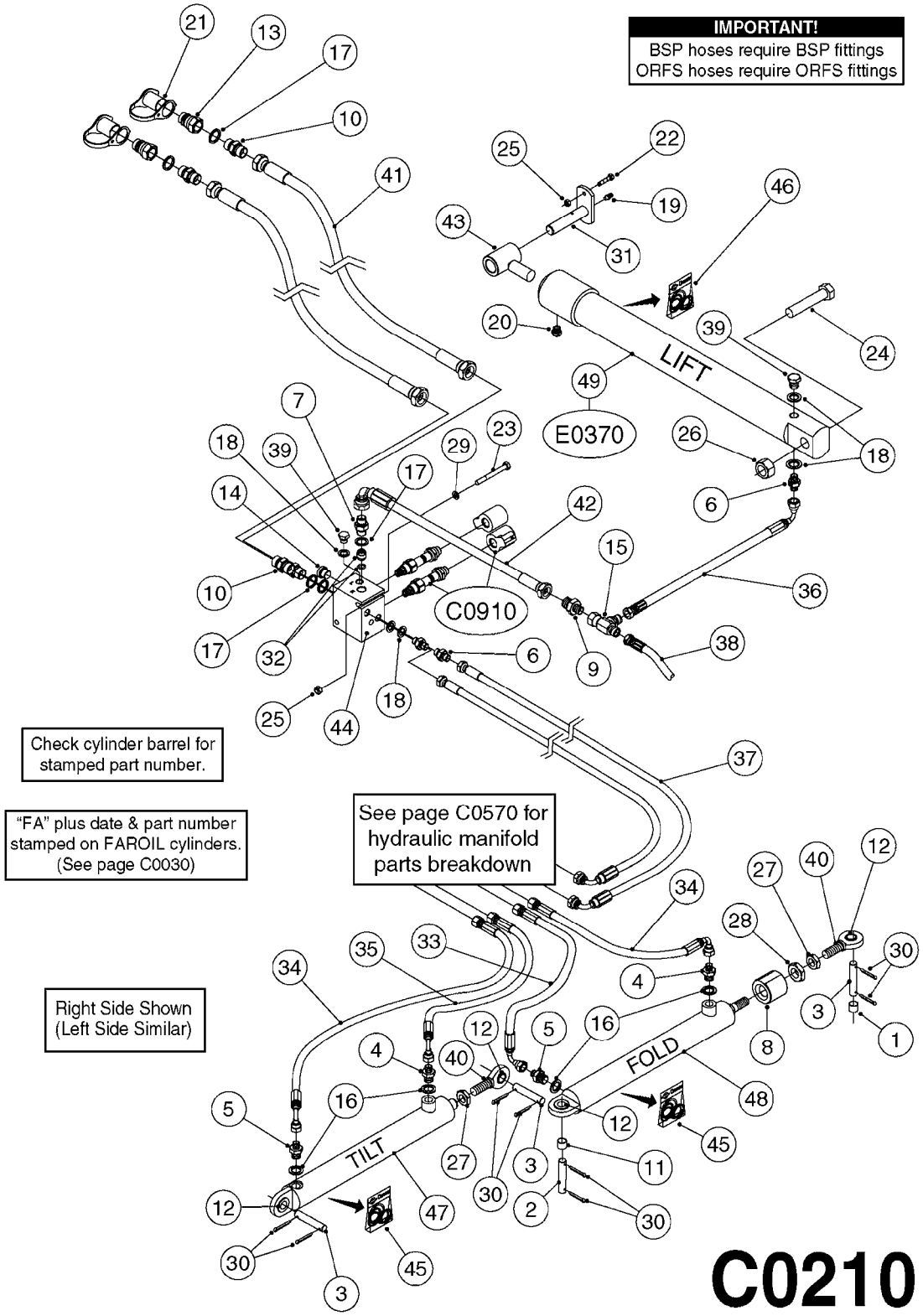

Agroparts: www.HARDI-INTERNATIONAL.com

HYDRAULICS HZ - RANGER 2000
C0210-HIN, 13:05:19

Date 12.08.2020 11:36

Pos.	parts-n°	order qty	description
1	145912	1	BUSHING D19.8/D17.0X7MM
2	146324	1	SHAFT D16.8 L102/2 X 5
3	146587	1	PIN D16.8 X 65
4	146835	1	HEX NIPPLE 1/4" - 3/8" BSP BSP
4	23235700	1	HEX NIPPLE 3/8"-9/16" ORFS
5	146839	1	HEX NIPPLE 1/4"X3/8" BSP 0.7MM BSP
5	23235800	1	HEX NIPPLE 3/8"-9/16" - 0.7mm ORFS
6	146845	1	HEX NIPPLE 1/4"X1/4" BSP
6	23234500	1	HEX NIPPLE 1/4" - 9/16" ORFS
7	146850	1	HEX NIPPLE 3/8"x3/8" - 1.8mm BSP
7	23234600	1	HEX NIPPLE 3/8"-11/16" - 1.8mm ORFS
8	146992	1	BUSHING F.CYLINDER
9	147061	1	HEX NIPPLE 1/4"X3/8"/1.8 BSP
9	23235200	1	HEX NIPPLE 1/4"-11/16" - 1.8mm ORFS
10	147132	1	HEX NIPPLE 1/2"X1/2" BSP DEL BSP
10	23235300	1	HEX NIPPLE 1/2"-13/16" ORFS
11	151872	1	BUSHING D22.0/18.0 10MM
12	210728	1	BEARING F.LINK HEAD M17
13	230311	1	QUICK COUPLING 1/2"
14	231924	1	PLUG 3/8'
15	232109	1	FITT.HY TEE 1/4"BSP UNION BSP
15	23231700	1	TEE 9/16"M-9/16"M-1/4"F ORFS ORFS
16	240866	1	DOWTYSEAL 3/8"
17	241356	1	DOWTYSEAL 1/2"
18	241404	1	DOWTY SEAL 1/4"
19	283699	1	GREASE NIPPLE M6X1
20	284265	1	PLUG BREATHER 1/4" F/CYLINDER
21	334206	1	DUST HOOD FOR HY-COUPLING
22	420567	1	BOLT HEX 8.8 DEL M8X30 FT
23	421255	1	BOLT HEX 8.8 SS M8X75
24	430918	1	M20X100 DIN 931-8.8 DEL
25	460143	1	LOCK NUT M8 SST A2 DIN985
26	460806	1	NUT HEX M20X2.50 LOCK DIN985A2 SS
27	461198	1	NUT HEX M16X2 JAMB
28	461249	1	NUT M22X1.5 DIN439B
29	471126	1	WASHER, M8, Ø16/ 8.4X 1.6, SS
30	480384	1	PIN COTTER 3/16 x 1-1/2"
31	615654	1	PIN D25 X 123 F. PARALIFT
32	782062	1	NON-RETURN VALVE UTV 3/8"
33	784001	1	HOSE HY X 1/4 X 067.00"STR+ELB BSP
33	78500200	1	HY.HO.1/4"L= 1700 STR-90° ORFS
34	784019	1	HOSE HY X 1/4 X 078.75"STR+ELB BSP

Pos.	parts-n°	order qty	description
34	78501500	1	HY.HO.1/4"L= 2000 STR-90° ORFS
35	784025	1	HOSE HY X 1/4" x 86.6"STR+ELB BSP
35	78502100	1	HY.HO.1/4"L= 2200 STR-90° ORFS
36	784037	1	HOSE HY X 1/4" x 130"STR+ELB BSP
36	78501503	1	HY.HO.1/4"L= 3300 STR-90° ORFS
37	784049	1	HOSE HY X 1/4" X 240"STR+ELB BSP
37	78503700	1	HYDR. HOSE. 1/4"L= 6350 STR-90° ORFS
38	784069	1	HOSE HY X 1/4 X 90.5" STR+ELB BSP
38	78505000	1	HY.HO.1/4"L= 2300 STR-90° ORFS
39	14010400	1	PLUG 1/4" BSP
40	21091900	1	LINK HEAD M16 x D17 DELTA
41	28052100	1	HOSE HY X 1/2" X 122.0"STR+STR BSP
41	78570500	1	HY.HO.1/2"L= 3100 STR-STR ORFS
42	28077100	1	HOSE HY X 3/8" X 98.5" STR+ELB BSP
42	78560400	1	HY.HO.3/8"L= 2500 STR-90° ORFS
43	61011803	1	ROD END M24X2 25M 06'07'
44	72286200	1	HYD. BLOCK COMP. PARA-LIFT NCM
45	75075000	1	SEAL KIT 78122600/27/28/29
46	75075200	1	SEAL KIT 78120900/14/50
47	78122700	1	CYLINDER D40/22X300MM RED
48	78122900	1	CYLINDER 40/22X300MM RED
49	78128800	1	CYLINDER, D50/30-500

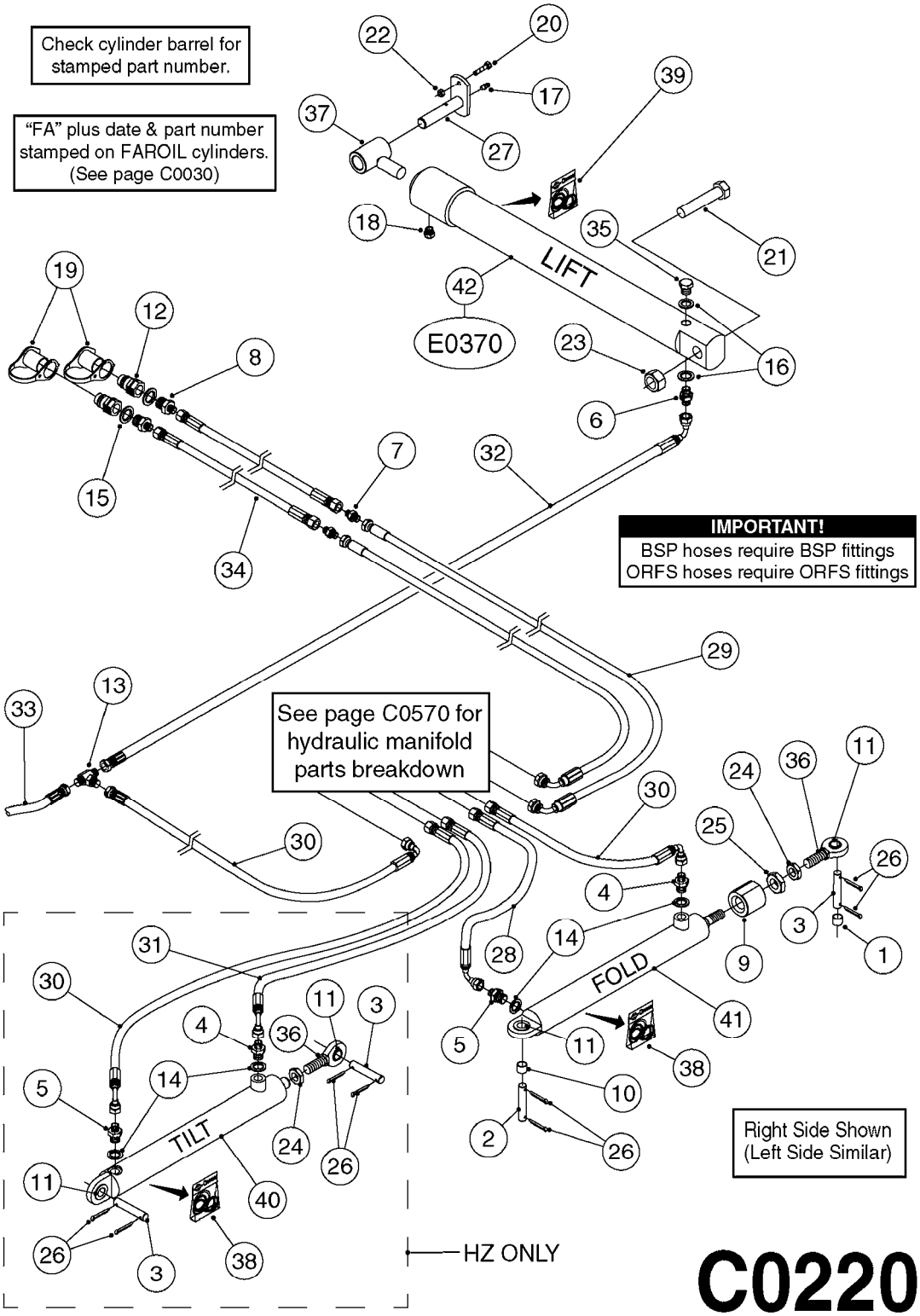
Check cylinder barrel for stamped part number.
"FA" plus date & part number stamped on FAROIL cylinders. (See page C0030)
LIFT
E0370
IMPORTANT!
BSP hoses require BSP fittings
ORFS hoses require ORFS fittings
See page C0570 for hydraulic manifold parts breakdown
FOLD
TILT
HZ ONLY
Right Side Shown (Left Side Similar)
C0220

HYDRAULICS HV/HZ - RANGER 550
C0220-HIN, 09:01:18

Date 12.08.2020 11:36

Pos.	parts-n°	order qty	description
1	145912	1	BUSHING D19.8/D17.0X7MM
2	146324	1	SHAFT D16.8 L102/2 X 5
3	146587	1	PIN D16.8 X 65
4	146835	1	HEX NIPPLE 1/4" - 3/8" BSP
5	146839	1	HEX NIPPLE 1/4"X3/8" BSP 0.7MM
6	146845	1	HEX NIPPLE 1/4"X1/4" BSP
6	23234500	1	HEX NIPPLE 1/4" - 9/16" ORFS
7	146845	1	HEX NIPPLE 1/4"X1/4" BSP
7	23239600	1	HEX NIPPLE 9/16"-9/16" ORFS
8	146846	1	HEX NIPPLE 1/2" X 1/4" BSP
8	23234800	1	HEX NIPPLE 1/2"-9/16" ORFS
9	146992	1	BUSHING F.CYLINDER
10	151872	1	BUSHING D22.0/18.0 10MM
11	210728	1	BEARING F.LINK HEAD M17
12	230311	1	QUICK COUPLING 1/2"
13	230963	1	TEE 1/4"M X 1/4"M X 1/4"M BSP BSP
13	23240400	1	TEE 9/16"-9/16"-9/16" ORFS ORFS
14	240866	1	DOWTYSEAL 3/8"
15	241356	1	DOWTYSEAL 1/2"
16	241404	1	DOWTY SEAL 1/4"
17	283699	1	GREASE NIPPLE M6X1
18	284265	1	PLUG BREATHER 1/4" F/CYLINDER
19	334206	1	DUST HOOD FOR HY-COUPLING
20	420567	1	BOLT HEX 8.8 DEL M8X30 FT
21	430918	1	M20X100 DIN 931-8.8 DEL
22	460143	1	LOCK NUT M8 SST A2 DIN985
23	460806	1	NUT HEX M20X2.50 LOCK DIN985A2 SS
24	461198	1	NUT HEX M16X2 JAMB
25	461249	1	NUT M22X1.5 DIN439B
26	480384	1	PIN COTTER 3/16 x 1-1/2"
27	615654	1	PIN D25 X 123 F. PARALIFT
28	784001	1	HOSE HY X 1/4 X 067.00"STR+ELB BSP
28	78500200	1	HY.HO.1/4"L= 1700 STR-90° ORFS
29	784015	1	HOSE HY X 1/4 X 210" STR-ELB BSP
29	78501403	1	HY.HO.1/4"L= 5330 STR-90° ORFS
30	784019	1	HOSE HY X 1/4 X 078.75"STR+ELB BSP
30	78501500	1	HY.HO.1/4"L= 2000 STR-90° ORFS
31	784025	1	HOSE HY X 1/4" x 86.6"STR+ELB BSP
31	78502100	1	HY.HO.1/4"L= 2200 STR-90° ORFS
32	784037	1	HOSE HY X 1/4" x 130"STR+ELB BSP

Pos.	parts-n°	order qty	description
32	78501503	1	HY.HO.1/4"L= 3300 STR-90° ORFS
33	784069	1	HOSE HY X 1/4 X 90.5" STR+ELB BSP
33	78505000	1	HY.HO.1/4"L= 2300 STR-90° ORFS
34	784087	1	HOSE HY X 1/4 X 126.00"STR+STR BSP
34	78505600	1	HY.HO.1/4"L= 3200 STR-STR ORFS
35	14010400	1	PLUG 1/4" BSP
36	21091900	1	LINK HEAD M16 x D17 DELTA
37	61011803	1	ROD END M24X2 25M 06'07'
38	75075000	1	SEAL KIT 78122600/27/28/29
39	75075200	1	SEAL KIT 78120900/14/50
40	78122700	1	CYLINDER D40/22X300MM RED
41	78122900	1	CYLINDER 40/22X300MM RED
42	78128800	1	CYLINDER, D50/30-500

HYDRAULICS OPEN CENTER RANGER
C0230-HIN, 25:02:16

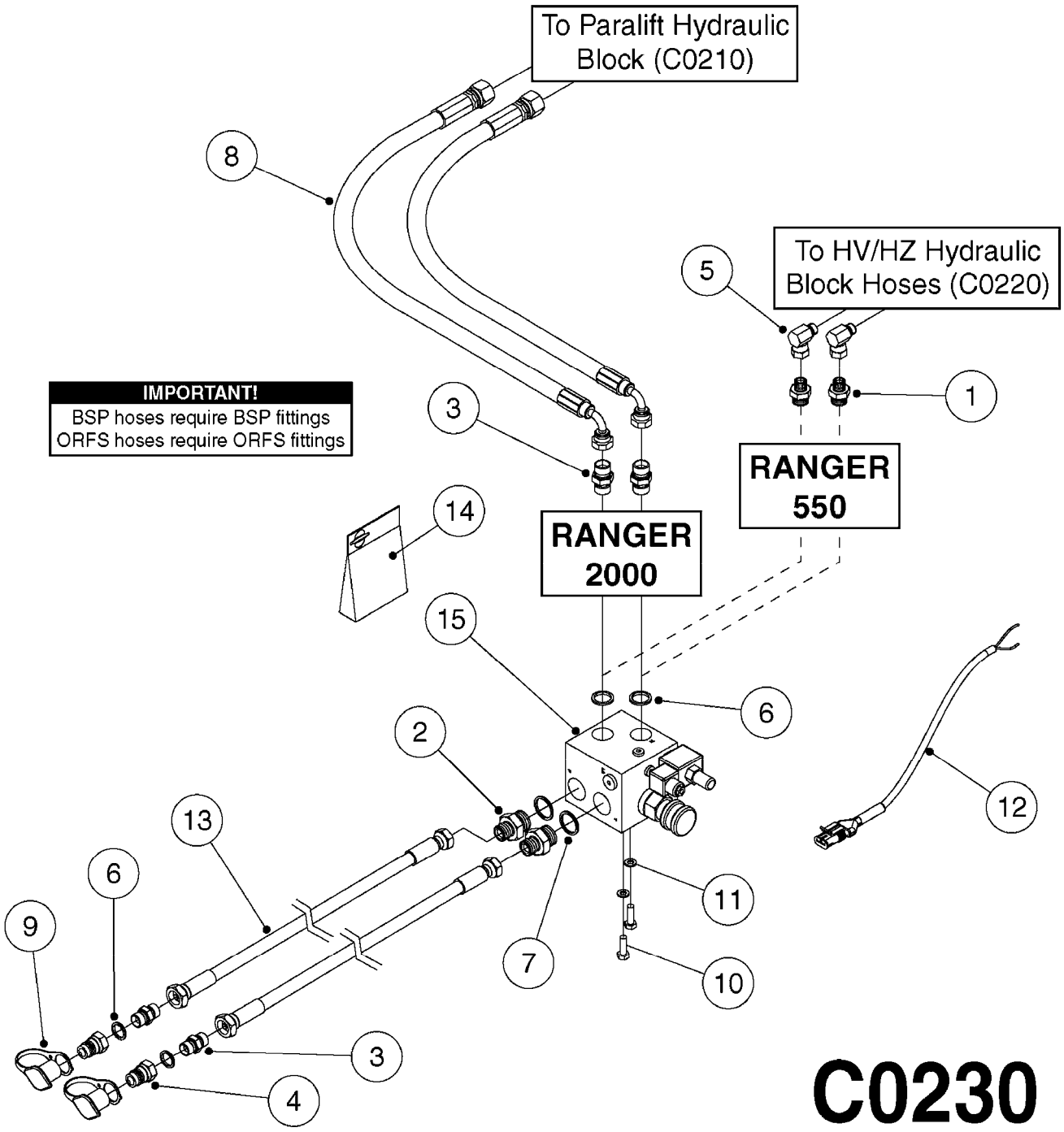

C0230

Agroparts: www.HARDI-INTERNATIONAL.com

HYDRAULICS OPEN CENTER RANGER
C0230-HIN, 25:02:16

Date 12.08.2020 11:36

Pos.	parts-n°	order qty	description
1	146846	1	HEX NIPPLE 1/2" X 1/4" BSP
1	23234800	1	HEX NIPPLE 1/2"-9/16" ORFS
2	146849	1	HEX. NIPPLE 3/4"BSP X 1/2"BSP BSP
2	23235100	1	HEX NIPPLE 3/4"-13/16" ORFS
3	147132	1	HEX NIPPLE 1/2"X1/2" BSP DEL BSP
3	23235300	1	HEX NIPPLE 1/2"-13/16" ORFS
4	230311	1	QUICK COUPLING 1/2"
5	232060	1	HY.ELBOW 1/4" BSP SWIVEL BSP
5	23240900	1	HYD.FIT. M-F 90° 9/16"-9/16" ORFS
6	241356	1	DOWTYSEAL 1/2"
7	241367	1	DOWTYSEAL 28.5x22
8	285547	1	HOSE HY X 1/2" X 15" STR+ELB BSP
8	78502603	1	HY.HO.1/2"L= 380 STR-90° ORFS
9	334206	1	DUST HOOD FOR HY-COUPLING
10	420582	1	BOLT HEX 8.8 DEL M8X20 FT A2 RANGER 2000
10	421046	1	BOLT HEX M8X25/25 A2 SS DIN933 RANGER 550
11	471126	1	WASHER, M8, Ø16/ 8.4X 1.6, SS
12	26006300	1	CABLE L = 0.50M, AMP, MALE, 2P RANGER 2000
12	26006600	1	CABLE L = 9.00M, AMP, MALE, 2P RANGER 550
13	28052100	1	HOSE HY X 1/2" X 122.0"STR+STR BSP
13	78570500	1	HY.HO.1/2"L= 3100 STR-STR ORFS
14	28061400	1	SEAL KIT F. 782145
15	72809100	1	BYPASS BLOCK 782145

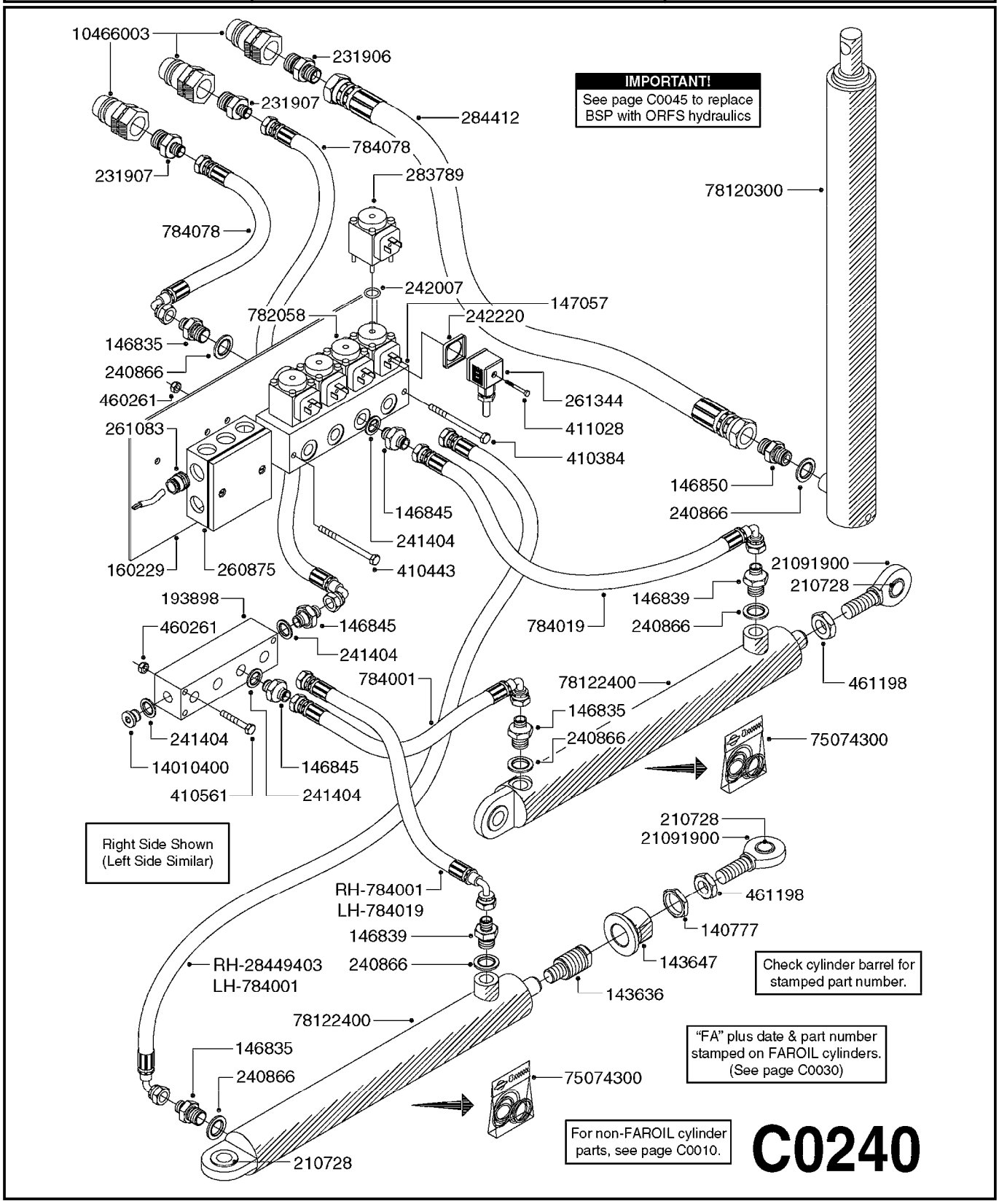

IMPORTANT!
See page C0045 to replace BSP with ORFS hydraulics

Check cylinder barrel for stamped part number.

"FA" plus date & part number stamped on FAROIL cylinders. (See page C0030)

For non-FAROIL cylinder parts, see page C0010.

C0240

Agroparts: www.HARDI-INTERNATIONAL.com

HYDRAULICS-EAG HZ 45-66'PRE 95
C0240-HIN, 09:01:18

Date 12.08.2020 11:36

parts-n°	order qty	description
140777	1	NUT HEX 3/4" BSP JAMB
143636	1	THREADED INSERT F.CYLINDER END
143647	1	COLLAR F.THREAD.ROD EXTENTON
146835	1	HEX NIPPLE 1/4" - 3/8" BSP
146839	1	HEX NIPPLE 1/4"X3/8" BSP 0.7MM
146845	1	HEX NIPPLE 1/4"X1/4"
146850	1	HEX NIPPLE 3/8"x3/8" - 1.8mm
147057	1	MANIFOLD BLOCK F.HYD/4
160229	1	MOUNT PLATE F.HYD. MANIFOLD
193898	1	HYD. DISTRIBUTOR BLOCK
210728	1	BEARING F.LINK HEAD M17
231906	1	HEX NIPPLE 3/8"BSP X 1/2"NPT
231907	1	HEX NIPPLE 1/4"BSP X 1/2"NPT
240866	1	DOWTYSEAL 3/8"
241404	1	DOWTY SEAL 1/4"
242007	1	O-RING Ø9.1 X 1.6 NITRILE
242220	1	GASKET F. HIRSMANN PLUG
260875	1	JUNCTION BOX
261083	1	GROMMET (PLASTIC)F.ELEC.CABLE
261344	1	HIRSCHMANN PLUG B
283789	1	SOLENOID F.HYD. VALVE
284412	1	HOSE HY 3/8" X 315" STR+STR
410384	1	BOLT HEX 8.8 DEL M6X65
410443	1	BOLT HEX 8.8 DEL M6X70
410561	1	BOLT HEX 8.8 DEL M6X50 FT
411028	1	SCREW M3X30 F.HIRSMANN
460261	1	NUT HEX M6X1.00 LOCK DIN985 A2 SS
461198	1	NUT HEX M16X2 JAMB
782058	1	HY VALVE
784001	1	HOSE HY X 1/4 X 067.00"STR+ELB
784019	1	HOSE HY X 1/4 X 078.75"STR+ELB
784078	1	HOSE HY X 1/4 X 417.33"STR+ELB
10466003	1	COUPLER PIONEER 8010-04 1/2NPT
14010400	1	PLUG 1/4" BSP
21091900	1	LINK HEAD M16 x D17 DELTA
28449403	1	HOSE HY X1/4X057.08"STR+ELB
75074300	1	SEALKIT78122000/23-25/30-32/46
78120300	1	CYLINDER 60/50/30 1100MM
78122400	1	DOUBLE CYLINDER D 40/20-300

IMPORTANT!
See page C0045 to replace BSP with ORFS hydraulics

See Page C0340 for a breakdown of HZ electric components.

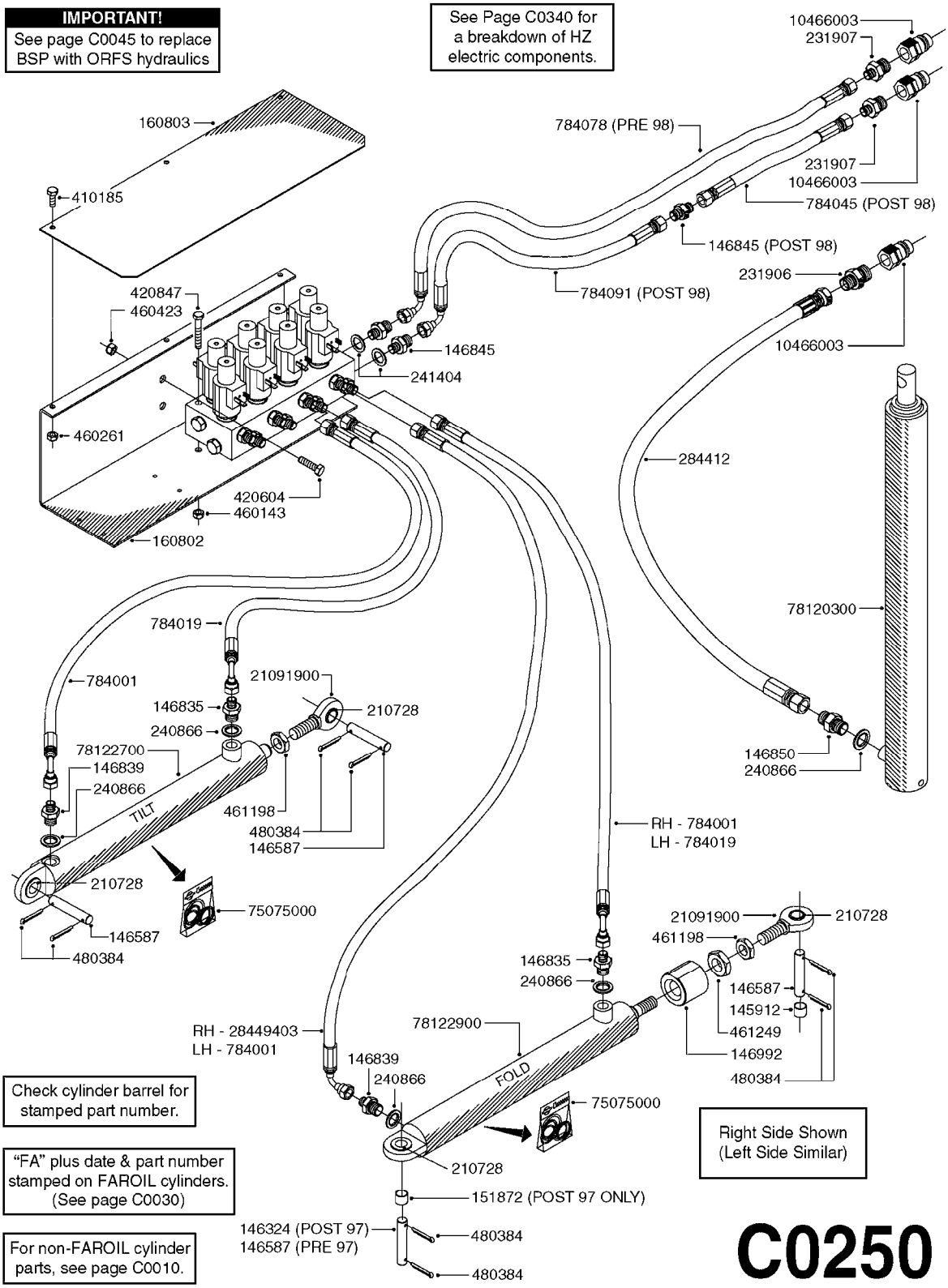

Check cylinder barrel for stamped part number.

"FA" plus date & part number stamped on FAROIL cylinders. (See page C0030)

For non-FAROIL cylinder parts, see page C0010.

Right Side Shown (Left Side Similar)

C0250

Agroparts: www.HARDI-INTERNATIONAL.com

HYDRAULCS EAG HZ 45-66'POST 95
C0250-HIN, 09:01:18

Date 12.08.2020 11:36

parts-n°	order qty	description
145912	1	BUSHING D19.8/D17.0X7MM
146324	1	SHAFT D16.8 L102/2 X 5
146587	1	PIN D16.8 X 65
146835	1	HEX NIPPLE 1/4" - 3/8" BSP
146839	1	HEX NIPPLE 1/4"X3/8" BSP 0.7MM
146845	1	HEX NIPPLE 1/4"X1/4"
146850	1	HEX NIPPLE 3/8"x3/8" - 1.8mm
146992	1	BUSHING F.CYLINDER
151872	1	BUSHING D22.0/18.0 10MM
160802	1	MOUNT PLATE F.HYD SOLENOID'HZ'
160803	1	COVER PLATE F.HYD SOLENOID'HZ'
210728	1	BEARING F.LINK HEAD M17
231906	1	HEX NIPPLE 3/8"BSP X 1/2"NPT
231907	1	HEX NIPPLE 1/4"BSP X 1/2"NPT
240866	1	DOWTYSEAL 3/8"
241404	1	DOWTY SEAL 1/4"
284412	1	HOSE HY 3/8" X 315" STR+STR
410185	1	BOLT HEX 8.8 DEL M6X16
420604	1	BOLT HEX 8.8 DEL M10X25 FT DIN933
420847	1	BOLT HEX 8.8 DEL M8X85
460143	1	LOCK NUT M8 SST A2 DIN985
460261	1	NUT HEX M6X1.00 LOCK DIN985 A2 SS
460423	1	NUT HEX M10X1.50 LOCK DIN985A2 SS
461198	1	NUT HEX M16X2 JAMB
461249	1	NUT M22X1.5 DIN439B
480384	1	PIN COTTER 3/16 x 1-1/2"
784001	1	HOSE HY X 1/4 X 067.00"STR+ELB
784019	1	HOSE HY X 1/4 X 078.75"STR+ELB
784045	1	HOSE HY X 1/4 X 157.50"STR+STR
784078	1	HOSE HY X 1/4 X 417.33"STR+ELB
784091	1	HOSE HY X 1/4 X 295.25"STR+ELB
10466003	1	COUPLER PIONEER 8010-04 1/2NPT
21091900	1	LINK HEAD M16 x D17 DELTA
28449403	1	HOSE HY X1/4X057.08"STR+ELB
75075000	1	SEAL KIT 78122600/27/28/29
78120300	1	CYLINDER 60/50/30 1100MM
78122700	1	CYLINDER D40/22X300MM RED
78122900	1	CYLINDER 40/22X300MM RED

HYD EAG HZ 45-66' W/DH CONTROL
C0260-HIN, 23:01:18

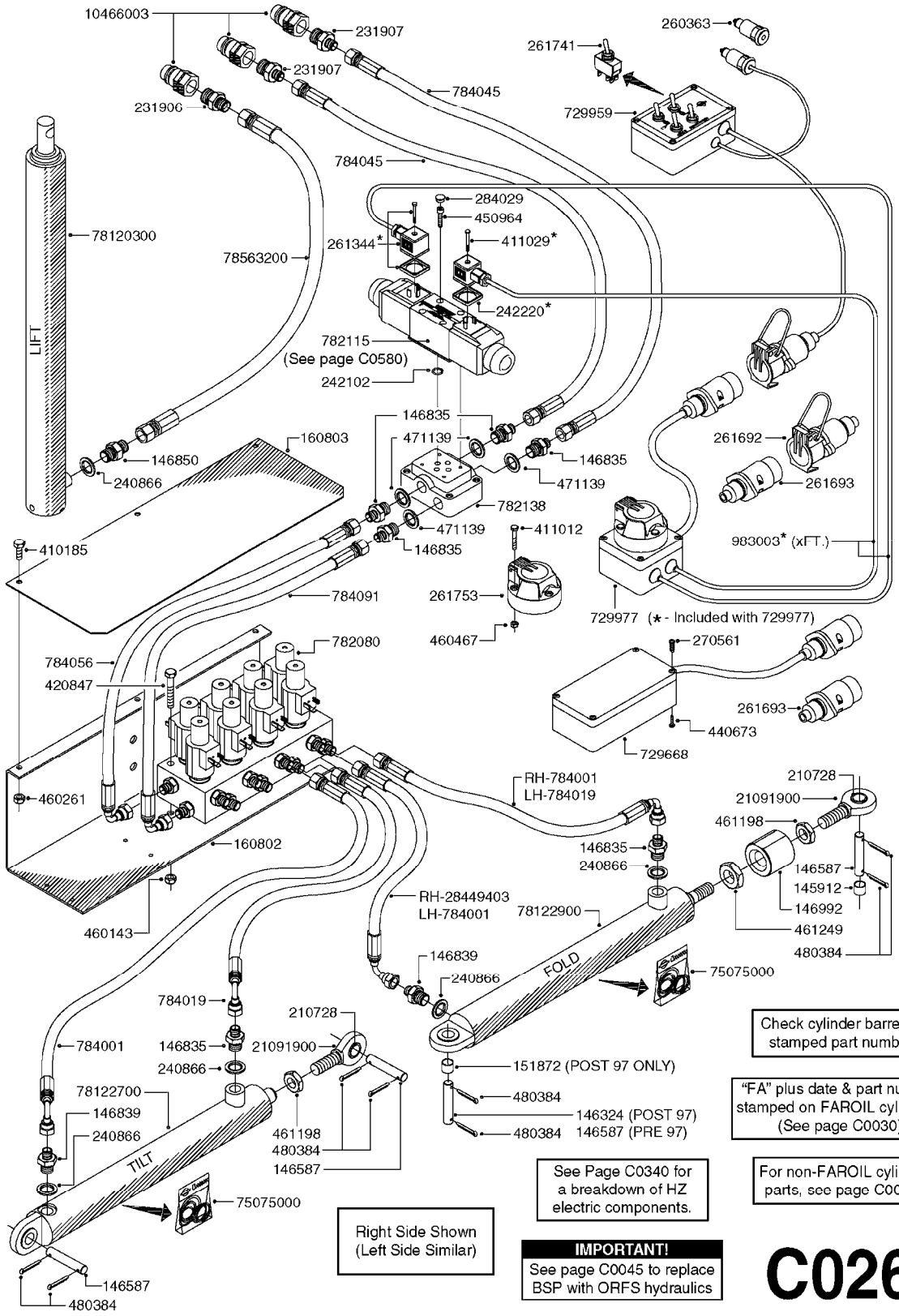

HARDI	**Agroparts: www.HARDI-INTERNATIONAL.com**	
	HYD EAG HZ 45-66' W/DH CONTROL C0260-HIN, 23:01:18	Page 1 Date 12.08.2020 11:36

parts-n°	order qty	description
145912	1	BUSHING D19.8/D17.0X7MM
146324	1	SHAFT D16.8 L102/2 X 5
146587	1	PIN D16.8 X 65
146835	1	HEX NIPPLE 1/4" - 3/8" BSP
146839	1	HEX NIPPLE 1/4"X3/8" BSP 0.7MM
146850	1	HEX NIPPLE 3/8"x3/8" - 1.8mm
146992	1	BUSHING F.CYLINDER
151872	1	BUSHING D22.0/18.0 10MM
160802	1	MOUNT PLATE F.HYD SOLENOID'HZ'
160803	1	COVER PLATE F.HYD SOLENOID'HZ'
210728	1	BEARING F.LINK HEAD M17
231906	1	HEX NIPPLE 3/8"BSP X 1/2"NPT
231907	1	HEX NIPPLE 1/4"BSP X 1/2"NPT
240866	1	DOWTYSEAL 3/8"
242102	1	O-RING Ø9.25X1.78 NITRIL 90SH
242220	1	GASKET F. HIRSMANN PLUG INCLUDED WITH 729977
260363	1	PLUG 2 POLE 12V
261344	1	HIRSCHMANN PLUG B INCLUDED WITH 729977
261692	1	PLUG ELEC.7 POLE FEMALE F.CABL
261693	1	PLUG ELEC. 7 POLE MALE
261741	1	SWITCH 2 POLE 12V TOGGLE PRESS
261753	1	PLUG ELEC.7 POLE FEMALE F.BASE
270561	1	SCREW W/SPRING ASSY. (QTY 1)
284029	1	COVER PLUS D10.5/12.0X5.0
410185	1	BOLT HEX 8.8 DEL M6X16
411012	1	SCREW M5X30 STAINLESS
411029	1	SCREW M3X35 F.HIRSMANN PLUG INCLUDED WITH 729977
420847	1	BOLT HEX 8.8 DEL M8X85
440673	1	SCREW F.PLASTIC 5X12 SS
450964	1	SCREW M5X30 F.CYLINDER
460143	1	LOCK NUT M8 SST A2 DIN985
460261	1	NUT HEX M6X1.00 LOCK DIN985 A2 SS
460467	1	NUT HEX M5 GALV.
461198	1	NUT HEX M16X2 JAMB
461249	1	NUT M22X1.5 DIN439B
471139	1	WASHER D22/D17X1.5 BRASS
480384	1	PIN COTTER 3/16 x 1-1/2"
729668	1	DISTRIBUTION BOX, 4 FUNCTION
729959	1	CONTROL BOX DAH 4-FUNCTION
729977	1	DAH DIRECTIONAL VLV JUNC. BOX
782080	1	MANIFOLD BLOCK, 4 FUNCTION
782115	1	HY SOLENOID VALVE DH HYD
782138	1	HY-BLOCK 1-VALVE W LS-PORT
784001	1	HOSE HY X 1/4 X 067.00"STR+ELB
784019	1	HOSE HY X 1/4 X 078.75"STR+ELB
784045	1	HOSE HY X 1/4 X 157.50"STR+STR
784056	1	HOSE HY X 1/4 X 394.00'STR+ELB
784091	1	HOSE HY X 1/4 X 295.25"STR+ELB
983003	1	CABLE ELEC.2X1MM WIRE BLACK EC INCLUDED WITH 729977
10466003	1	COUPLER PIONEER 8010-04 1/2NPT
21091900	1	LINK HEAD M16 x D17 DELTA
28449403	1	HOSE HY X1/4X057.08"STR+ELB
75075000	1	SEAL KIT 78122600/27/28/29
78120300	1	CYLINDER 60/50/30 1100MM
78122700	1	CYLINDER D40/22X300MM RED
78122900	1	CYLINDER 40/22X300MM RED
78563200	1	HYD HOSE ORFS 6S-6-6S L=8000

HYDRAULICS-EAGLE HY 80-90'
C0270-HIN, 30:03:16

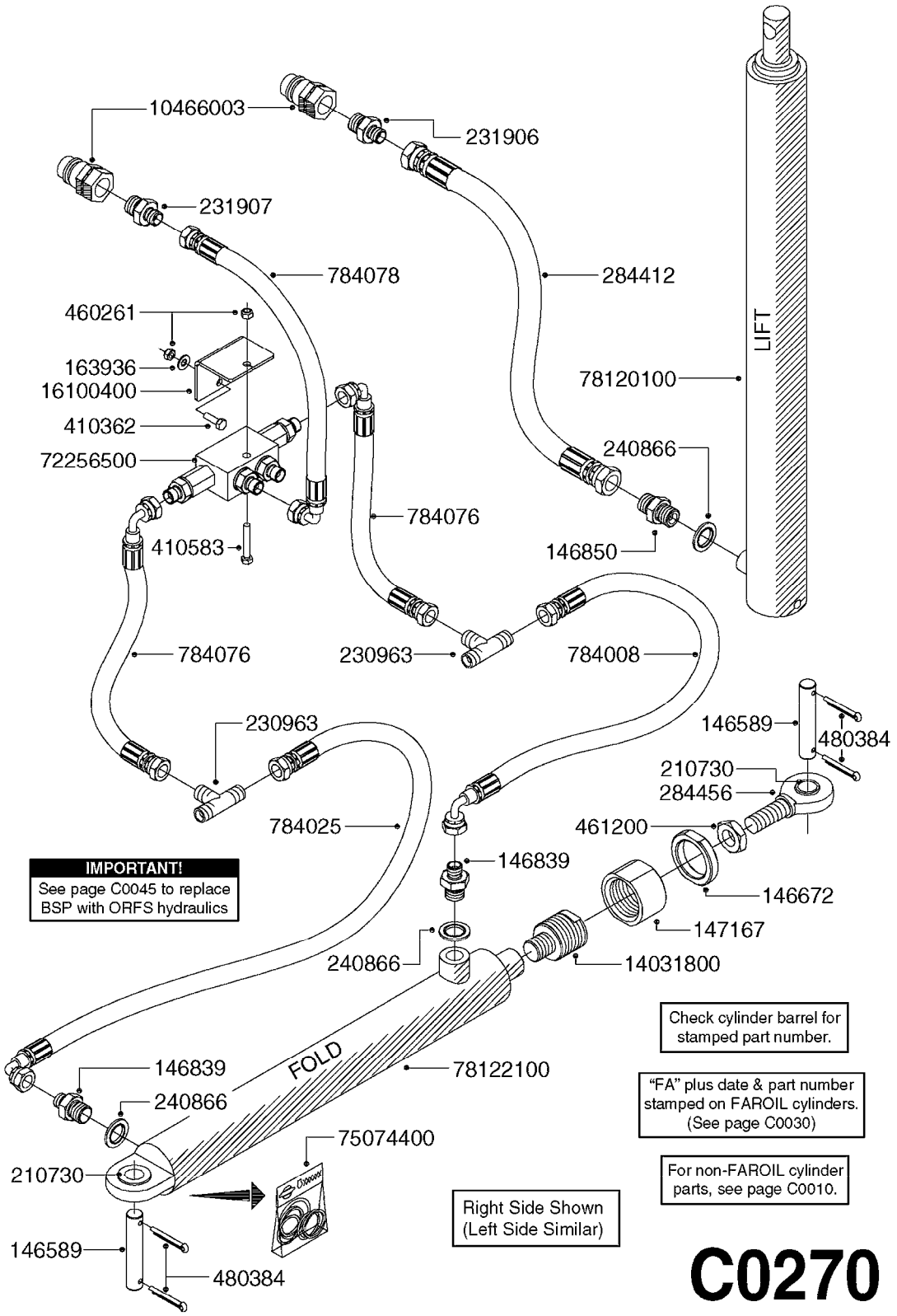

IMPORTANT!
See page C0045 to replace BSP with ORFS hydraulics

Check cylinder barrel for stamped part number.

"FA" plus date & part number stamped on FAROIL cylinders. (See page C0030)

For non-FAROIL cylinder parts, see page C0010.

Right Side Shown (Left Side Similar)

C0270

Agroparts: www.HARDI-INTERNATIONAL.com

HYDRAULICS-EAGLE HY 80-90'
C0270-HIN, 30:03:16

Date 12.08.2020 11:36

parts-n°	order qty	description
146589	1	PIN D19.8 X 65
146672	1	NUT HEX LOCK F.ADJUSTER
146839	1	HEX NIPPLE 1/4"X3/8" BSP 0.7MM
146850	1	HEX NIPPLE 3/8"x3/8" - 1.8mm
147167	1	BUSHING D50/D36X45MM
163936	1	WASHER D15/D6.2X1
210730	1	BEARING F.LINK HEAD M20
230963	1	TEE 1/4"M X 1/4"M X 1/4"M BSP
231906	1	HEX NIPPLE 3/8"BSP X 1/2"NPT
231907	1	HEX NIPPLE 1/4"BSP X 1/2"NPT
240866	1	DOWTYSEAL 3/8"
284412	1	HOSE HY 3/8" X 315" STR+STR
284456	1	LINK HEAD M20 X D20 L=30
410362	1	BOLT HEX 8.8 SS M6X20
410583	1	BOLT HEX 8.8 DEL M6X40
460261	1	NUT HEX M6X1.00 LOCK DIN985 A2 SS
461200	1	NUT HEX M20X1.5 JAMB.
480384	1	PIN COTTER 3/16 x 1-1/2"
784008	1	HOSE HY X 1/4" X 98.4"STR+ELB
784025	1	HOSE HY X 1/4" x 86.6"STR+ELB
784076	1	HOSE,HY,1/4" L=8.5" STR-ELB
784078	1	HOSE HY X 1/4 X 417.33"STR+ELB
10466003	1	COUPLER PIONEER 8010-04 1/2NPT
14031800	1	ADAPTOR F.HY CYLINDER L=40
16100400	1	PLATE 3 X 60 X 91 HY BLOCK MT
72256500	1	DOUB.PILOT STEERED COUNT.VALVE
75074400	1	SEAL KIT 78121800/21/44
78120100	1	CYLINDER TELESC.65/40-1237
78122100	1	CYLINDER DOUBLE D50/25-298

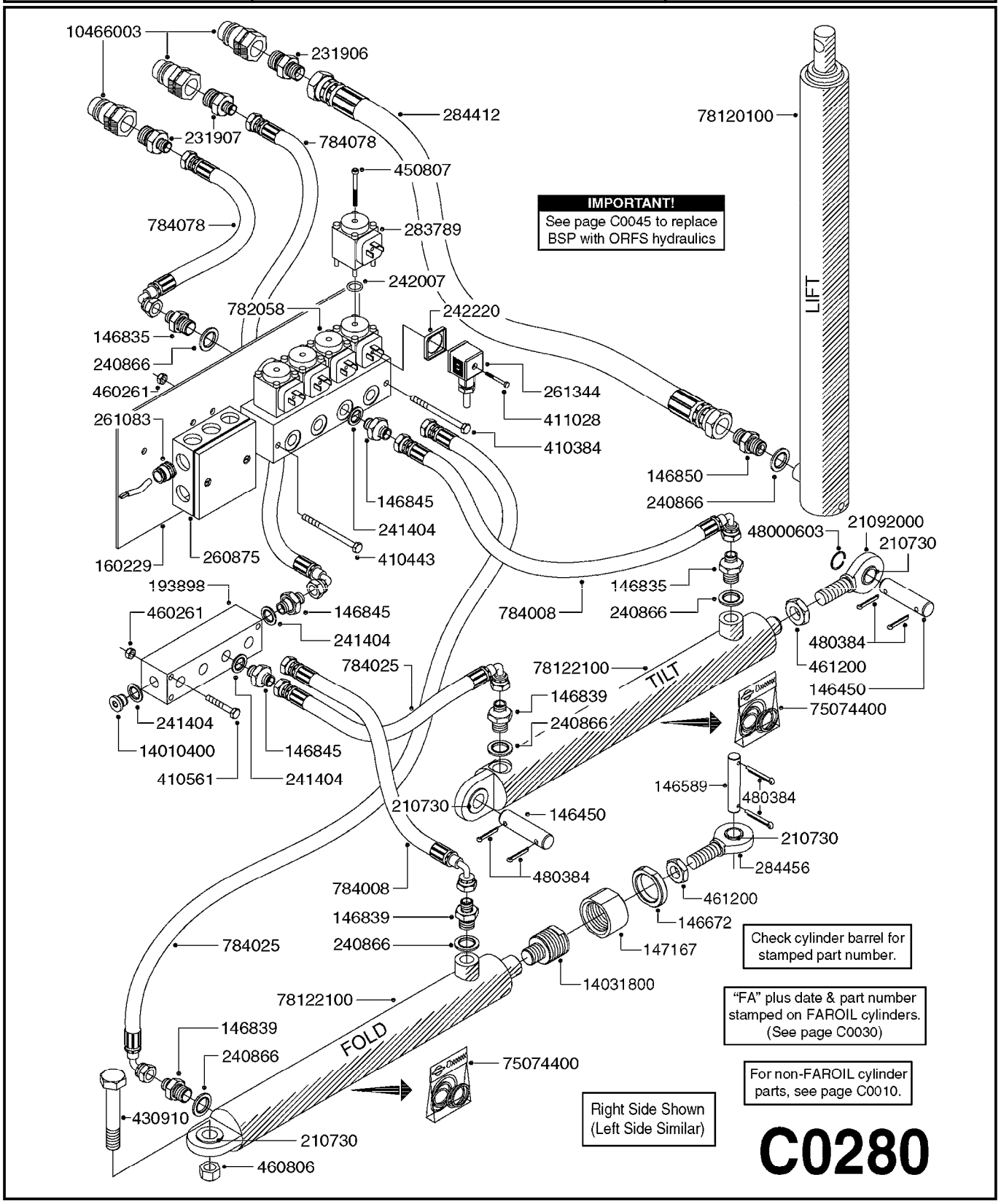
10466003
231906
284412
78120100
231907
784078
450807
IMPORTANT!
See page C0045 to replace BSP with ORFS hydraulics
784078
283789
242007
LIFT
782058
242220
146835
240866
460261
261344
261083
411028
410384
146850
240866
146845
241404
410443
160229
260875
48000603
21092000
210730
193898
146835
460261
146845
784008
240866
241404
480384
461200
784025
78122100
TILT
146450
146839
75074400
240866
241404
14010400
146845
410561
241404
146589
480384
210730
146450
210730
284456
480384
784008
461200
146839
146672
240866
147167
784025
14031800
78122100
146839
FOLD
240866
75074400
430910
210730
460806
Check cylinder barrel for stamped part number.
"FA" plus date & part number stamped on FAROIL cylinders. (See page C0030)
For non-FAROIL cylinder parts, see page C0010.
Right Side Shown (Left Side Similar)
C0280

Agroparts: www.HARDI-INTERNATIONAL.com

HYDRAULCS EAGLE HZ 80-90'PRE95
C0280-HIN, 29:09:17

Date 12.08.2020 11:36

parts-n°	order qty	description
146450	1	PIN D19.8 X 75 WITH 2 X D5
146589	1	PIN D19.8 X 65
146672	1	NUT HEX LOCK F.ADJUSTER
146835	1	HEX NIPPLE 1/4" - 3/8" BSP
146839	1	HEX NIPPLE 1/4"X3/8" BSP 0.7MM
146845	1	HEX NIPPLE 1/4"X1/4"
146850	1	HEX NIPPLE 3/8"x3/8" - 1.8mm
147167	1	BUSHING D50/D36X45MM
160229	1	MOUNT PLATE F.HYD. MANIFOLD
193898	1	HYD. DISTRIBUTOR BLOCK
210730	1	BEARING F.LINK HEAD M20
231906	1	HEX NIPPLE 3/8"BSP X 1/2"NPT
231907	1	HEX NIPPLE 1/4"BSP X 1/2"NPT
240866	1	DOWTYSEAL 3/8"
241404	1	DOWTY SEAL 1/4"
242007	1	O-RING Ø9.1 X 1.6 NITRILE
242220	1	GASKET F. HIRSMANN PLUG
260875	1	JUNCTION BOX
261083	1	GROMMET (PLASTIC)F.ELEC.CABLE
261344	1	HIRSCHMANN PLUG B
283789	1	SOLENOID F.HYD. VALVE
284412	1	HOSE HY 3/8" X 315" STR+STR
284456	1	LINK HEAD M20 X D20 L=30
410384	1	BOLT HEX 8.8 DEL M6X65
410443	1	BOLT HEX 8.8 DEL M6X70
410561	1	BOLT HEX 8.8 DEL M6X50 FT
411028	1	SCREW M3X30 F.HIRSMANN
430910	1	BOLT HEX 8.8 DEL M20X110
450807	1	SCREW M4X45 ALLEN
460261	1	NUT HEX M6X1.00 LOCK DIN985 A2 SS
460806	1	NUT HEX M20X2.50 LOCK DIN985A2 SS
461200	1	NUT HEX M20X1.5 JAMB.
480384	1	PIN COTTER 3/16 x 1-1/2"
782058	1	HY VALVE
784008	1	HOSE HY X 1/4" X 98.4"STR+ELB
784025	1	HOSE HY X 1/4" x 86.6"STR+ELB
784078	1	HOSE HY X 1/4 X 417.33"STR+ELB
10466003	1	COUPLER PIONEER 8010-04 1/2NPT
14010400	1	PLUG 1/4" BSP
14031800	1	ADAPTOR F.HY CYLINDER L=40
21092000	1	LINK HEAD M20 x D20 L=78 DELTA
48000603	1	SNAP RING, Ø36X1.5 F.210730
75074400	1	SEAL KIT 78121800/21/44
78120100	1	CYLINDER TELESC.65/40-1237
78122100	1	CYLINDER DOUBLE D50/25-298

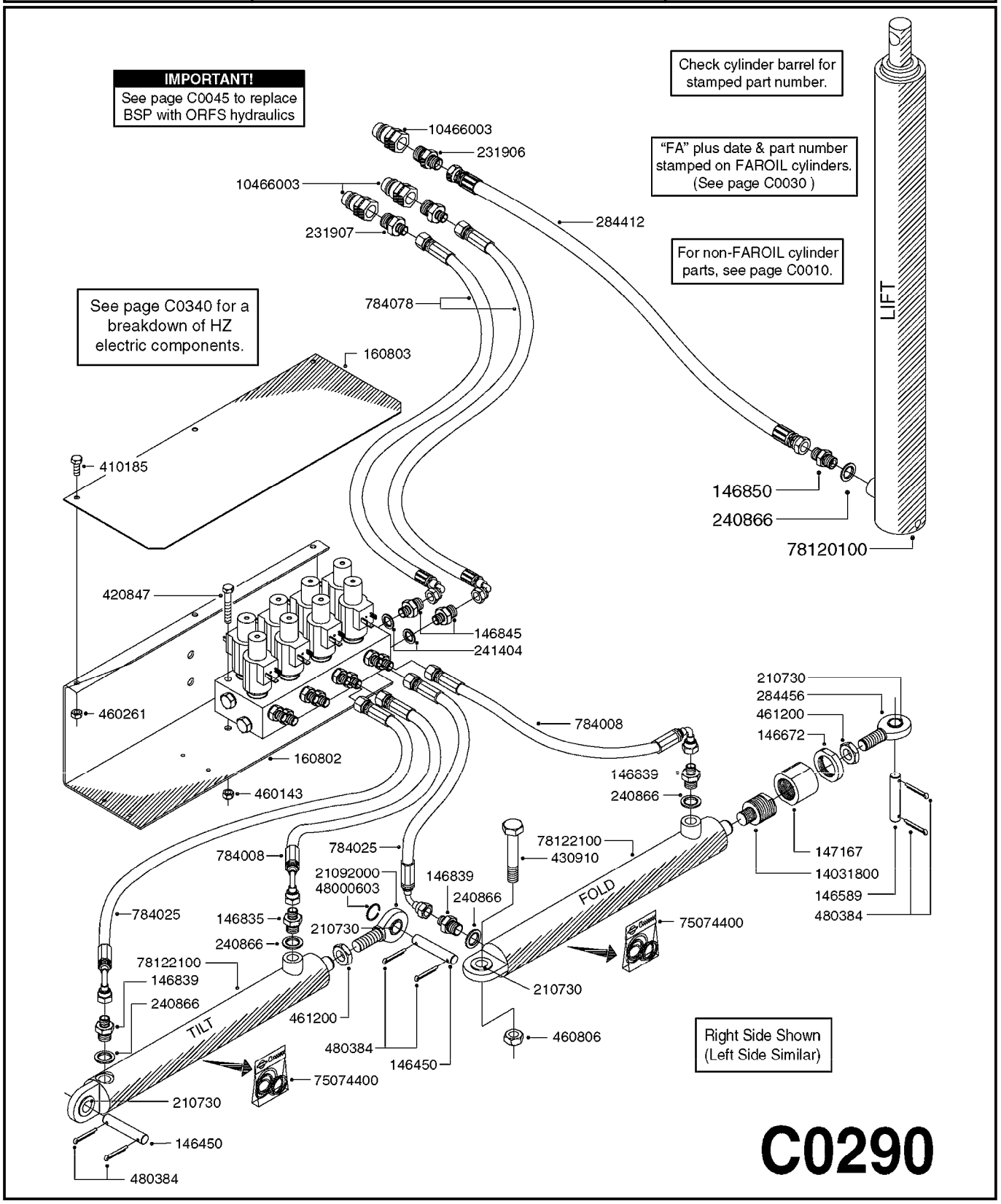
IMPORTANT!
See page C0045 to replace BSP with ORFS hydraulics
Check cylinder barrel for stamped part number.
"FA" plus date & part number stamped on FAROIL cylinders. (See page C0030)
For non-FAROIL cylinder parts, see page C0010.
See page C0340 for a breakdown of HZ electric components.
LIFT
10466003
231906
10466003
231907
284412
784078
160803
410185
146850
240866
78120100
420847
146845
241404
460261
160802
460143
784008
210730
284456
461200
146672
146639
240866
147167
14031800
146589
480384
784008
784025
21092000
48000603
146839
240866
78122100
430910
FOLD
75074400
784025
146835
210730
240866
78122100
146839
240866
TILT
461200
480384
146450
75074400
210730
460806
Right Side Shown
(Left Side Similar)
210730
146450
480384

C0290

Agroparts: www.HARDI-INTERNATIONAL.com

HYD EAGLE HZ 80-90' W/JOYSTICK
C0290-HIN, 29:09:17

Date 12.08.2020 11:36

parts-n°	order qty	description
146450	1	PIN D19.8 X 75 WITH 2 X D5
146589	1	PIN D19.8 X 65
146672	1	NUT HEX LOCK F.ADJUSTER
146835	1	HEX NIPPLE 1/4" - 3/8" BSP
146839	1	HEX NIPPLE 1/4"X3/8" BSP 0.7MM
146845	1	HEX NIPPLE 1/4"X1/4"
146850	1	HEX NIPPLE 3/8"x3/8" - 1.8mm
147167	1	BUSHING D50/D36X45MM
160802	1	MOUNT PLATE F.HYD SOLENOID'HZ'
160803	1	COVER PLATE F.HYD SOLENOID'HZ'
210730	1	BEARING F.LINK HEAD M20
231906	1	HEX NIPPLE 3/8"BSP X 1/2"NPT
231907	1	HEX NIPPLE 1/4"BSP X 1/2"NPT
240866	1	DOWTYSEAL 3/8"
241404	1	DOWTY SEAL 1/4"
284412	1	HOSE HY 3/8" X 315" STR+STR
284456	1	LINK HEAD M20 X D20 L=30
410185	1	BOLT HEX 8.8 DEL M6X16
420847	1	BOLT HEX 8.8 DEL M8X85
430910	1	BOLT HEX 8.8 DEL M20X110
460143	1	LOCK NUT M8 SST A2 DIN985
460261	1	NUT HEX M6X1.00 LOCK DIN985 A2 SS
460806	1	NUT HEX M20X2.50 LOCK DIN985A2 SS
461200	1	NUT HEX M20X1.5 JAMB.
480384	1	PIN COTTER 3/16 x 1-1/2"
784008	1	HOSE HY X 1/4" X 98.4"STR+ELB
784025	1	HOSE HY X 1/4" x 86.6"STR+ELB
784078	1	HOSE HY X 1/4 X 417.33"STR+ELB
10466003	1	COUPLER PIONEER 8010-04 1/2NPT
14031800	1	ADAPTOR F.HY CYLINDER L=40
21092000	1	LINK HEAD M20 x D20 L=78 DELTA
48000603	1	SNAP RING, Ø36X1.5 F.210730
75074400	1	SEAL KIT 78121800/21/44
78120100	1	CYLINDER TELESC.65/40-1237
78122100	1	CYLINDER DOUBLE D50/25-298

HYD EAGLE HZ 80-90' W/ DH
C0300-HIN, 23:01:18

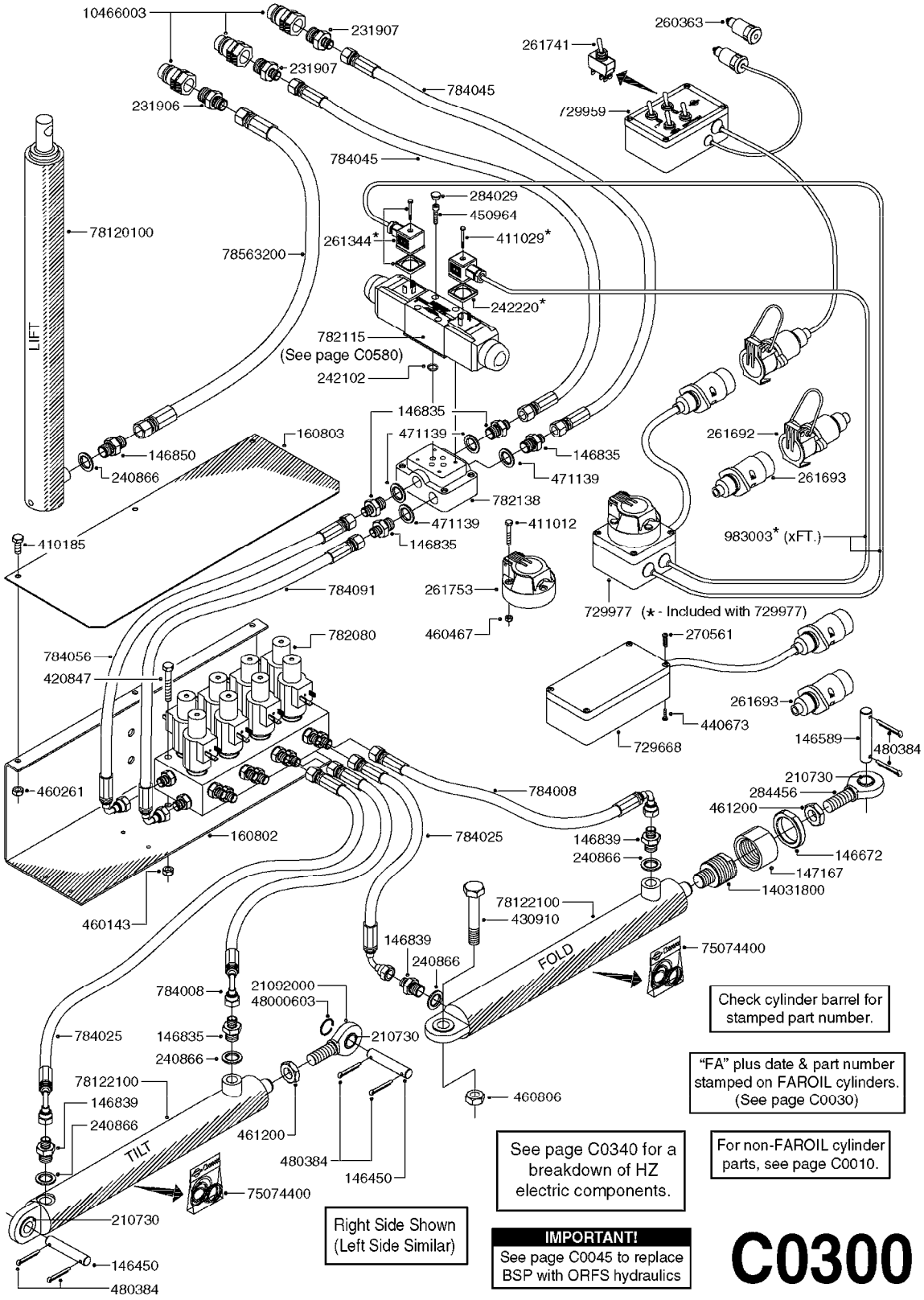

Agroparts: www.HARDI-INTERNATIONAL.com

HYD EAGLE HZ 80-90' W/ DH
C0300-HIN, 23:01:18

Date 12.08.2020 11:36

parts-n°	order qty	description
146450	1	PIN D19.8 X 75 WITH 2 X D5
146589	1	PIN D19.8 X 65
146672	1	NUT HEX LOCK F.ADJUSTER
146835	1	HEX NIPPLE 1/4" - 3/8" BSP
146839	1	HEX NIPPLE 1/4"X3/8" BSP 0.7MM
146850	1	HEX NIPPLE 3/8"x3/8" - 1.8mm
147167	1	BUSHING D50/D36X45MM
160802	1	MOUNT PLATE F.HYD SOLENOID'HZ'
160803	1	COVER PLATE F.HYD SOLENOID'HZ'
210730	1	BEARING F.LINK HEAD M20
231906	1	HEX NIPPLE 3/8"BSP X 1/2"NPT
231907	1	HEX NIPPLE 1/4"BSP X 1/2"NPT
240866	1	DOWTYSEAL 3/8"
242102	1	O-RING Ø9.25X1.78 NITRIL 90SH
242220	1	GASKET F. HIRSMANN PLUG
		INCLUDED WITH 729977
260363	1	PLUG 2 POLE 12V
261344	1	HIRSCHMANN PLUG B
		INCLUDED WITH 729977
261692	1	PLUG ELEC.7 POLE FEMALE F.CABL
261693	1	PLUG ELEC. 7 POLE MALE
261741	1	SWITCH 2 POLE 12V TOGGLE PRESS
261753	1	PLUG ELEC.7 POLE FEMALE F.BASE
270561	1	SCREW W/SPRING ASSY. (QTY 1)
284029	1	COVER PLUS D10.5/12.0X5.0
284456	1	LINK HEAD M20 X D20 L=30
410185	1	BOLT HEX 8.8 DEL M6X16
411012	1	SCREW M5X30 STAINLESS
411029	1	SCREW M3X35 F.HIRSMANN PLUG
		INCLUDED WITH 729977
420847	1	BOLT HEX 8.8 DEL M8X85
430910	1	BOLT HEX 8.8 DEL M20X110
440673	1	SCREW F.PLASTIC 5X12 SS
450964	1	SCREW M5X30 F.CYLINDER
460143	1	LOCK NUT M8 SST A2 DIN985
460261	1	NUT HEX M6X1.00 LOCK DIN985 A2 SS
460467	1	NUT HEX M5 GALV.
460806	1	NUT HEX M20X2.50 LOCK DIN985A2 SS
461200	1	NUT HEX M20X1.5 JAMB.
471139	1	WASHER D22/D17X1.5 BRASS
480384	1	PIN COTTER 3/16 x 1-1/2"
729668	1	DISTRIBUTION BOX, 4 FUNCTION
729959	1	CONTROL BOX DAH 4-FUNCTION
729977	1	DAH DIRECTIONAL VLV JUNC. BOX
782080	1	MANIFOLD BLOCK, 4 FUNCTION
782115	1	HY SOLENOID VALVE DH HYD
782138	1	HY-BLOCK 1-VALVE W LS-PORT
784008	1	HOSE HY X 1/4" X 98.4"STR+ELB
784025	1	HOSE HY X 1/4" x 86.6"STR+ELB
784045	1	HOSE HY X 1/4 X 157.50"STR+STR
784056	1	HOSE HY X 1/4 X 394.00'STR+ELB
784091	1	HOSE HY X 1/4 X 295.25"STR+ELB
983003	1	CABLE ELEC.2X1MM WIRE BLACK EC
		INCLUDED WITH 729977
10466003	1	COUPLER PIONEER 8010-04 1/2NPT
14031800	1	ADAPTOR F.HY CYLINDER L=40
21092000	1	LINK HEAD M20 x D20 L=78 DELTA
48000603	1	SNAP RING, Ø36X1.5 F.210730
75074400	1	SEAL KIT 78121800/21/44
78120100	1	CYLINDER TELESC.65/40-1237
78122100	1	CYLINDER DOUBLE D50/25-298

parts-n°	order qty	description
78563200	1	HYD HOSE ORFS 6S-6-6S L=8000

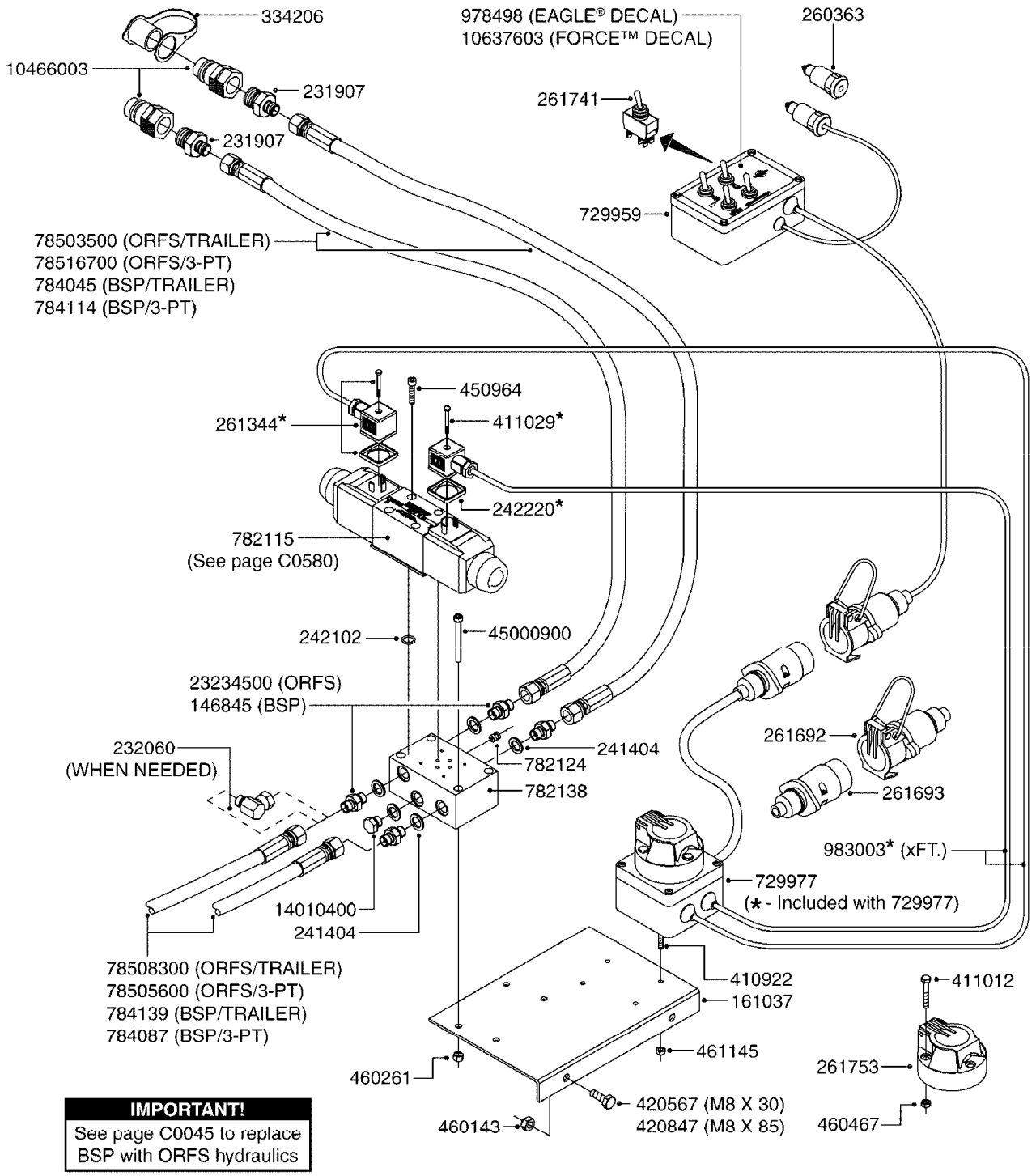

IMPORTANT!
See page C0045 to replace BSP with ORFS hydraulics

C0310

Agroparts: www.HARDI-INTERNATIONAL.com

HYDRAULICS EAGLE/FORCE DH
C0310-HIN, 16:04:20

Date 12.08.2020 11:36

parts-n°	order qty	description
146845	1	HEX NIPPLE 1/4"X1/4"
161037	1	MOUNT PLATE F.DH VICKERS VALVE
231907	1	HEX NIPPLE 1/4"BSP X 1/2"NPT
232060	1	HY.ELBOW 1/4" BSP SWIVEL
241404	1	DOWTY SEAL 1/4"
242102	1	O-RING Ø9.25X1.78 NITRIL 90SH
242220	1	GASKET F. HIRSMANN PLUG
		INCLUDED WITH 729977
260363	1	PLUG 2 POLE 12V
261344	1	HIRSCHMANN PLUG B
		INCLUDED WITH 729977
261692	1	PLUG ELEC.7 POLE FEMALE F.CABL
261693	1	PLUG ELEC. 7 POLE MALE
261741	1	SWITCH 2 POLE 12V TOGGLE PRESS
261753	1	PLUG ELEC.7 POLE FEMALE F.BASE
334206	1	DUST HOOD FOR HY-COUPLING
410922	1	CYL.SKR 8.8 DEL M4X20 RST
411012	1	SCREW M5X30 STAINLESS
411029	1	SCREW M3X35 F.HIRSMANN PLUG
		INCLUDED WITH 729977
420567	1	BOLT HEX 8.8 DEL M8X30 FT
420847	1	BOLT HEX 8.8 DEL M8X85
450964	1	SCREW M5X30 F.CYLINDER
460143	1	LOCK NUT M8 SST A2 DIN985
460261	1	NUT HEX M6X1.00 LOCK DIN985 A2 SS
460467	1	NUT HEX M5 GALV.
461145	1	NUT HEX M4 LOCK
729959	1	CONTROL BOX DAH 4-FUNCTION
729977	1	DAH DIRECTIONAL VLV JUNC. BOX
782115	1	HY SOLENOID VALVE DH HYD
782124	1	SWITCH VALVE OUTS.1/8" 5000PSI
782138	1	HY-BLOCK 1-VALVE W LS-PORT
784045	1	HOSE HY X 1/4 X 157.50"STR+STR
784087	1	HOSE HY X 1/4 X 126.00"STR+STR
784114	1	HOSE HY X 1/4 X 80.7" STR+STR
784139	1	HOSE HY X 1/4 X 216.50"STR+STR
978498	1	DECAL SWITCH BOX DH HYD.
983003	1	CABLE ELEC.2X1MM WIRE BLACK EC
		INCLUDED WITH 729977
10466003	1	COUPLER PIONEER 8010-04 1/2NPT
10637603	1	DECAL F.SWITCH BOX - FORCE
14010400	1	PLUG 1/4" BSP
23234500	1	HEX NIPPLE 1/4" - 9/16"
45000900	1	BOLT ALLEN HEAD M6 X 60 SS
78503500	1	HY.HO.1/4"L= 4000
		STR-STR
78505600	1	HY.HO.1/4"L= 3200
		STR-STR
78508300	1	HY.HO.1/4"L= 5500
		STR-STR
78516700	1	HY.HO.1/4"L= 2050
		STR-STR

HYD EAGLE HZ JOYSTICK CONTROL
C0320-HIN, 30:03:16

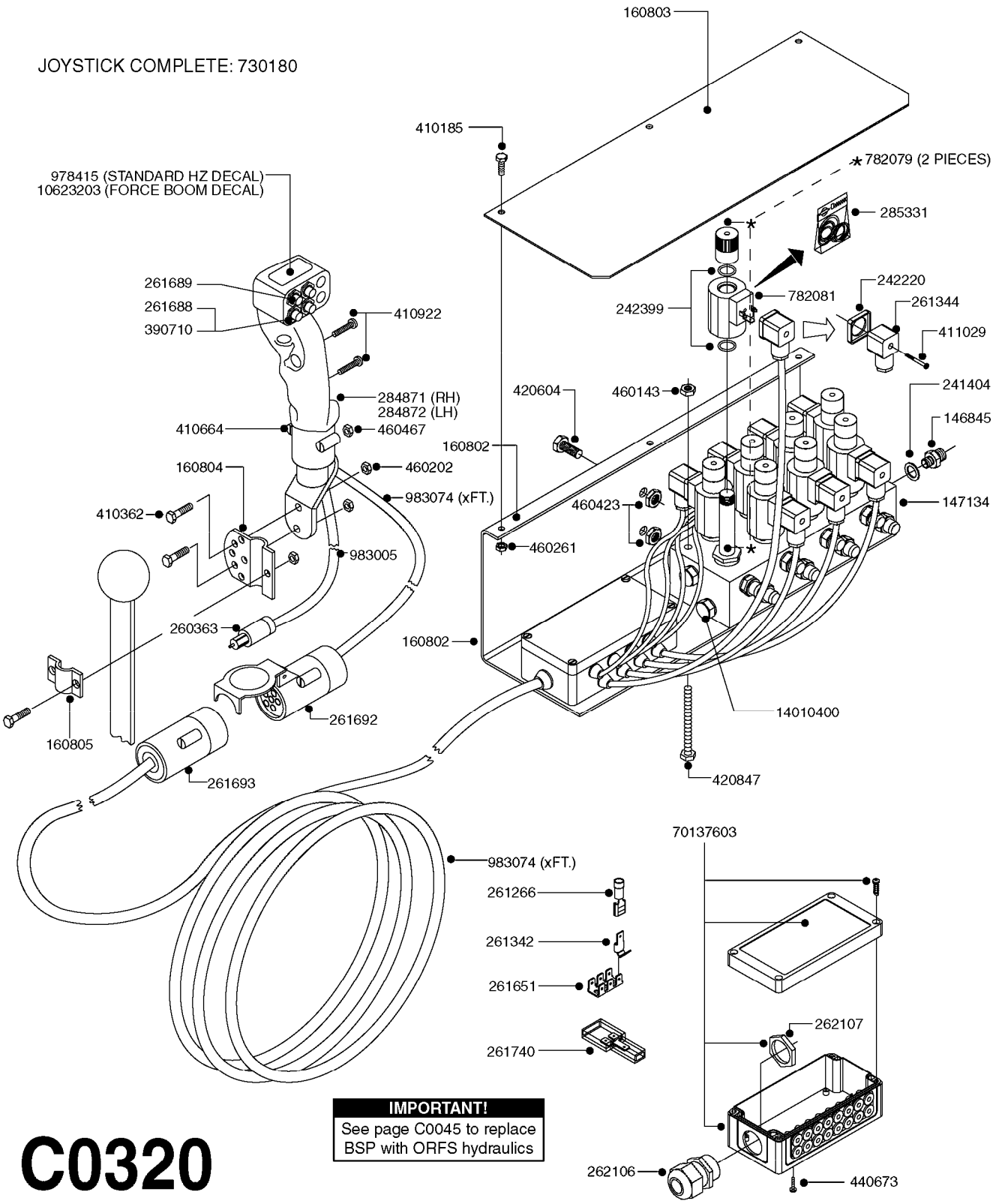

IMPORTANT!
See page C0045 to replace BSP with ORFS hydraulics

C0320

Agroparts: www.HARDI-INTERNATIONAL.com

HYD EAGLE HZ JOYSTICK CONTROL
C0320-HIN, 30:03:16

Date 12.08.2020 11:36

parts-n°	order qty	description
146845	1	HEX NIPPLE 1/4"X1/4"
147134	1	MANIFOLD 4-FUNCTION
160802	1	MOUNT PLATE F.HYD SOLENOID'HZ'
160803	1	COVER PLATE F.HYD SOLENOID'HZ'
160804	1	MOUNT BRACKET F.HANDLE
160805	1	MOUNT STRAP F.HANDLE
241404	1	DOWTY SEAL 1/4"
242220	1	GASKET F. HIRSMANN PLUG
242399	1	O-RING F.HYD SOLENOID VALVE
260363	1	PLUG 2 POLE 12V
261266	1	CONNECTOR END F.CABLE HP
261342	1	SPADE F.ELEC.3 WAY CONNECTOR
261344	1	HIRSCHMANN PLUG B
261651	1	SPADE F.ELEC.6 POLE CONNECTOR
261688	1	SWITCH F. HANDLE WHITE
261689	1	CAP RUBBER F. SWITCH JOYSTICK
261692	1	PLUG ELEC.7 POLE FEMALE F.CABL
261693	1	PLUG ELEC. 7 POLE MALE
261740	1	SPADE F.ELEC.3 POLE CONN.INSUL
262106	1	BULKHEAD F. CABLE 6.5-14 BLACK
262107	1	NUT F. BULKHEAD CABLE GRAY
284871	1	CONTROL HANDLE RIGHT HALF
284872	1	CONTROL HANDLE LEFT HALF
285331	1	SEAL KIT F. HZ HYD.SOLENOID 96
390710	1	SWITCH F.HANDLE GREY MACHINED
410185	1	BOLT HEX 8.8 DEL M6X16
410362	1	BOLT HEX 8.8 SS M6X20
410664	1	BOLT HEX M5 X 20
410922	1	CYL.SKR 8.8 DEL M4X20 RST
411029	1	SCREW M3X35 F.HIRSMANN PLUG
420604	1	BOLT HEX 8.8 DEL M10X25 FT DIN933
420847	1	BOLT HEX 8.8 DEL M8X85
440673	1	SCREW F.PLASTIC 5X12 SS
460143	1	LOCK NUT M8 SST A2 DIN985
460202	1	NUT HEX M6
460261	1	NUT HEX M6X1.00 LOCK DIN985 A2 SS
460423	1	NUT HEX M10X1.50 LOCK DIN985A2 SS
460467	1	NUT HEX M5 GALV.
730180	1	HYD.KIT JOYSTICK CTRL HANDLE
782079	1	CARTRIDGE VALVE
782081	1	SOLENOID F. CARTRIDGE VALVE
978415	1	DECAL CONTROL HANDLE
983005	1	ELEC. CABLE 2 WIRE X 1.5MM
983074	1	ELEC. CABLE 5 WIRE X 1.5MM
10623203	1	DECAL F.JOYSTICK - FORCE
14010400	1	PLUG 1/4" BSP
70137603	1	JUNC. BOX, FLUID, COMPLETE, 2015

STEERABLE DRAWBAR CM PLUS
C0330-HIN, 30:03:16

IMPORTANT!
See page C0045 to replace BSP with ORFS hydraulics

Check cylinder barrel for stamped part number.

"FA" plus date & part number stamped on FAROIL cylinders. (See page C0030)

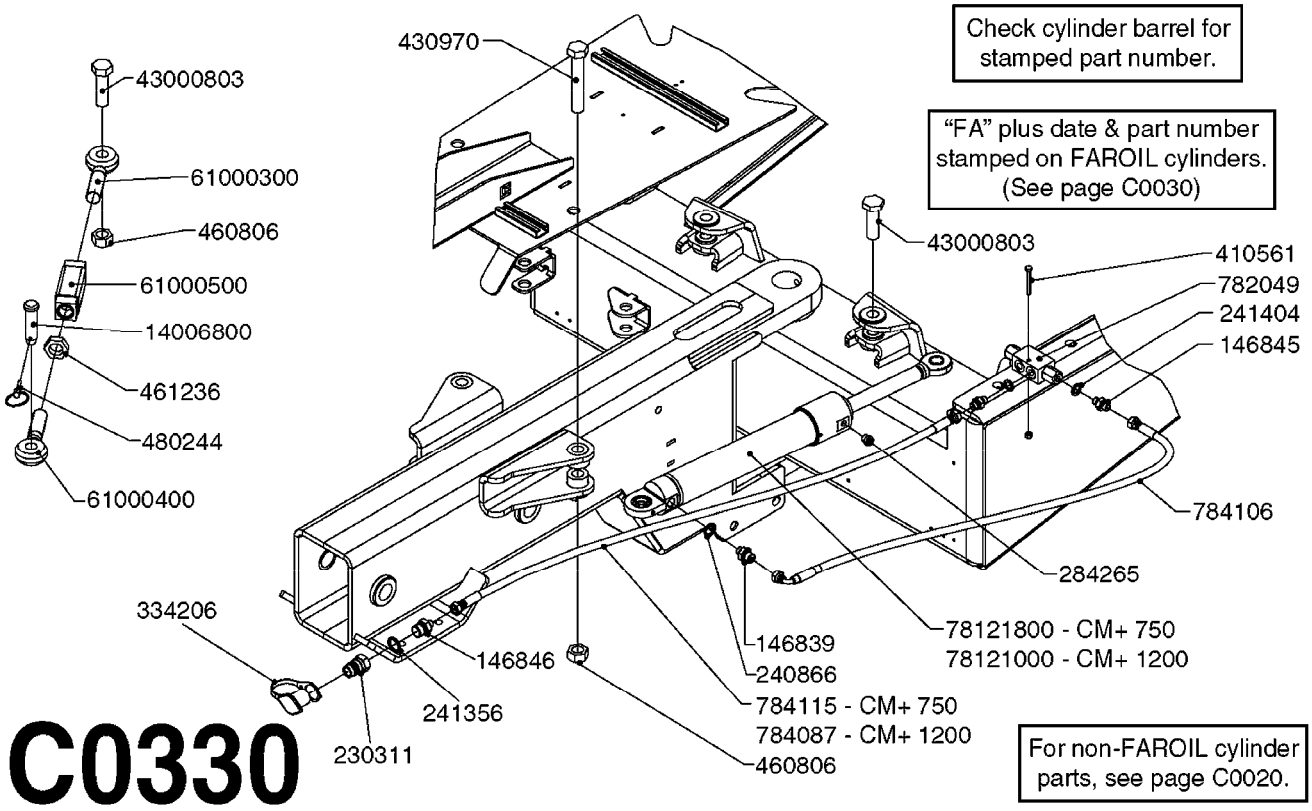

C0330

For non-FAROIL cylinder parts, see page C0020.

Agroparts: www.HARDI-INTERNATIONAL.com

STEERABLE DRAWBAR CM PLUS
C0330-HIN, 30:03:16

Date 12.08.2020 11:36

parts-n°	order qty	description
146839	1	HEX NIPPLE 1/4"X3/8" BSP 0.7MM
146845	1	HEX NIPPLE 1/4"X1/4"
146846	1	HEX NIPPLE 1/2" X 1/4"
230311	1	QUICK COUPLING 1/2"
240866	1	DOWTYSEAL 3/8"
241356	1	DOWTYSEAL 1/2"
241404	1	DOWTY SEAL 1/4"
284265	1	PLUG BREATHER 1/4" F/CYLINDER
334206	1	DUST HOOD FOR HY-COUPLING
410561	1	BOLT HEX 8.8 DEL M6X50 FT
430970	1	BOLT HEX M20X120 DIN931- DEL
460806	1	NUT HEX M20X2.50 LOCK DIN985A2 SS
461236	1	NUT HEX M24X1.5
480244	1	PIN SNAP D4.5
782049	1	CHECK VALVE DOUBLE HYDRAULIC
784087	1	HOSE HY X 1/4 X 126.00"STR+STR
784106	1	HOSE HY X 1/4 X 15.75"STR.+ELB
784115	1	HOSE HY 1/4 X 118.25"STR.+STR.
14006800	1	PIN D=20 L=55
43000803	1	BOLT HEX M20 X 70MM DEL - FT
61000300	1	TURN BUCKLE END RH 20M
61000400	1	TURN BUCKLE END LH 20M
61000500	1	TURN BUCKLE BODY 20M
78121000	1	CYLINDER DOUBLE D70/40-400
78121800	1	CYLINDER D50/25 L=300

HYD EAGLE HZ JOYSTICK 2005
C0340-HIN, 13:05:19

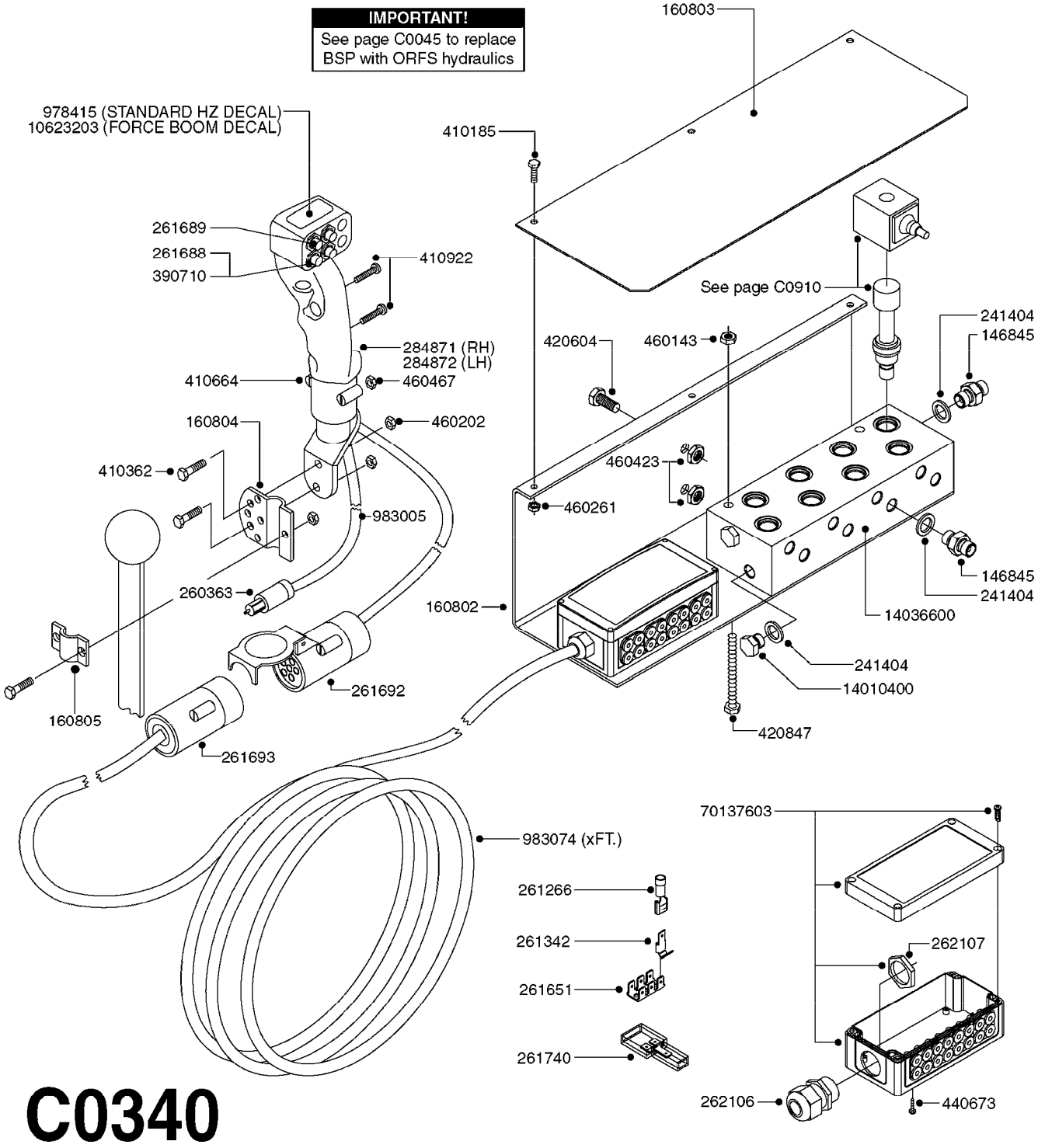

C0340

Agroparts: www.HARDI-INTERNATIONAL.com

HYD EAGLE HZ JOYSTICK 2005
C0340-HIN, 13:05:19

Date 12.08.2020 11:36

parts-n°	order qty	description
146845	1	HEX NIPPLE 1/4"X1/4"
160802	1	MOUNT PLATE F.HYD SOLENOID'HZ'
160803	1	COVER PLATE F.HYD SOLENOID'HZ'
160804	1	MOUNT BRACKET F.HANDLE
160805	1	MOUNT STRAP F.HANDLE
241404	1	DOWTY SEAL 1/4"
260363	1	PLUG 2 POLE 12V
261266	1	CONNECTOR END F.CABLE HP
261342	1	SPADE F.ELEC.3 WAY CONNECTOR
261651	1	SPADE F.ELEC.6 POLE CONNECTOR
261688	1	SWITCH F. HANDLE WHITE
261689	1	CAP RUBBER F. SWITCH JOYSTICK
261692	1	PLUG ELEC.7 POLE FEMALE F.CABL
261693	1	PLUG ELEC. 7 POLE MALE
261740	1	SPADE F.ELEC.3 POLE CONN.INSUL
262106	1	BULKHEAD F. CABLE 6.5-14 BLACK
262107	1	NUT F. BULKHEAD CABLE GRAY
284871	1	CONTROL HANDLE RIGHT HALF
284872	1	CONTROL HANDLE LEFT HALF
390710	1	SWITCH F.HANDLE GREY MACHINED
410185	1	BOLT HEX 8.8 DEL M6X16
410362	1	BOLT HEX 8.8 SS M6X20
410664	1	BOLT HEX M5 X 20
410922	1	CYL.SKR 8.8 DEL M4X20 RST
420604	1	BOLT HEX 8.8 DEL M10X25 FT DIN933
420847	1	BOLT HEX 8.8 DEL M8X85
440673	1	SCREW F.PLASTIC 5X12 SS
460143	1	LOCK NUT M8 SST A2 DIN985
460202	1	NUT HEX M6
460261	1	NUT HEX M6X1.00 LOCK DIN985 A2 SS
460423	1	NUT HEX M10X1.50 LOCK DIN985A2 SS
460467	1	NUT HEX M5 GALV.
978415	1	DECAL CONTROL HANDLE
983005	1	ELEC. CABLE 2 WIRE X 1.5MM
983074	1	ELEC. CABLE 5 WIRE X 1.5MM
10623203	1	DECAL F.JOYSTICK - FORCE
14010400	1	PLUG 1/4" BSP
14036600	1	MANIFOLD 4-FUNCTION SPC 2004
70137603	1	JUNC. BOX, FLUID, COMPLETE, 2015

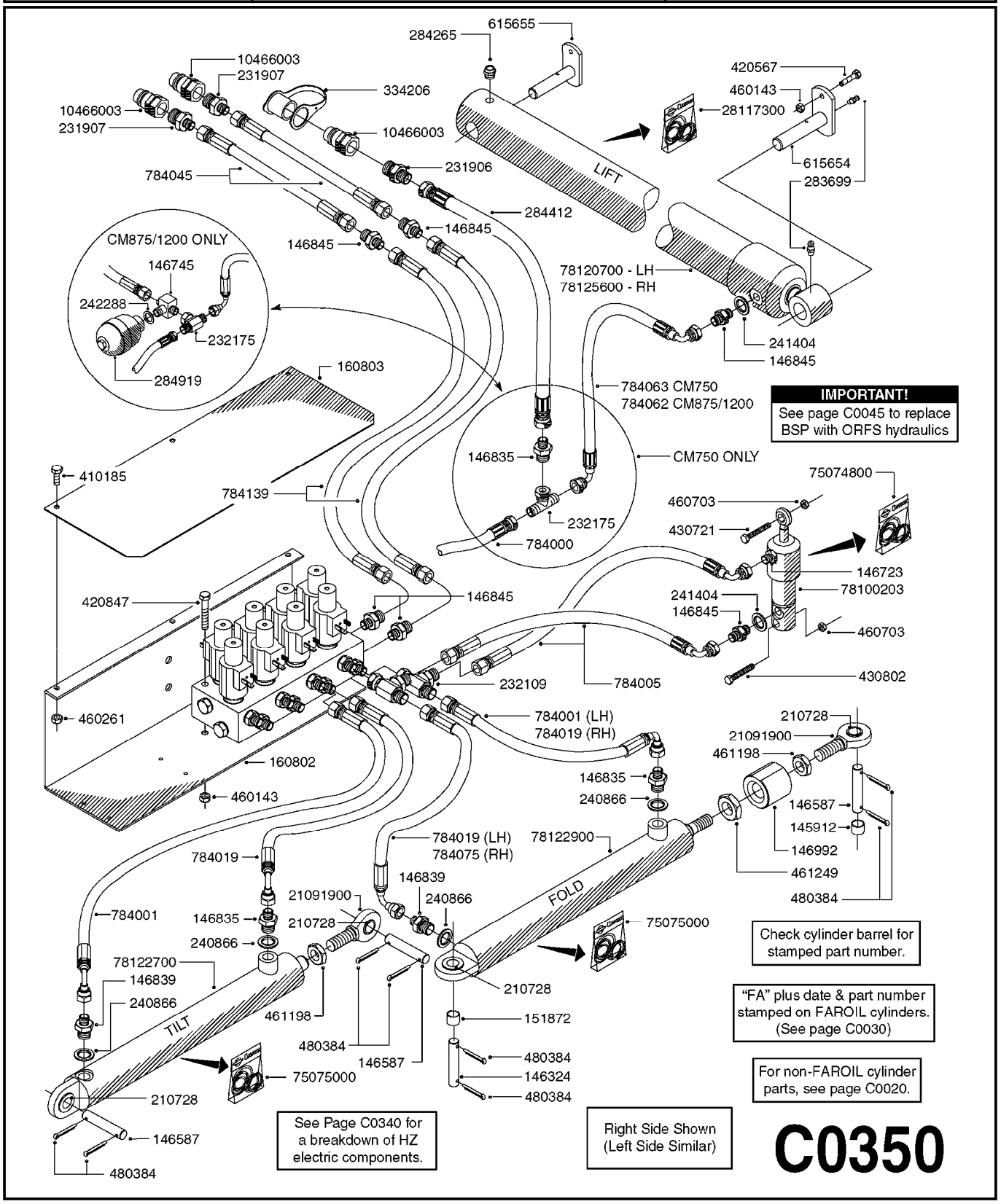
615655
284265
10466003
231907
334206
10466003
231907
10466003
231906
784045
284412
146845
146845
CM875/1200 ONLY
146745
242288
232175
284919
160803
410185
784139
420567
460143
28117300
615654
283699
LIFT
78120700 - LH
78125600 - RH
241404
146845
784063 CM750
784062 CM875/1200
IMPORTANT!
See page C0045 to replace BSP with ORFS hydraulics
146835
CM750 ONLY
232175
784000
75074800
460703
430721
146723
78100203
460703
430802
420847
146845
241404
146845
232109
784005
460261
784001 (LH)
784019 (RH)
160802
460143
210728
21091900
461198
146835
240866
146587
145912
146992
461249
480384
784019 (LH)
784075 (RH)
78122900
784019
146839
21091900
240866
FOLD
784001
146835
210728
240866
75075000
Check cylinder barrel for stamped part number.
78122700
146839
240866
TILT
461198
210728
151872
"FA" plus date & part number stamped on FAROIL cylinders. (See page C0030)
480384
146587
480384
146324
480384
75075000
For non-FAROIL cylinder parts, see page C0020.
210728
146587
480384
See Page C0340 for a breakdown of HZ electric components.
Right Side Shown (Left Side Similar)
C0350

Agroparts: www.HARDI-INTERNATIONAL.com

HYD EAGLE HZ SPB 45'-66' - CM
C0350-HIN, 09:01:18

Date 12.08.2020 11:36

parts-n°	order qty	description
145912	1	BUSHING D19.8/D17.0X7MM
146324	1	SHAFT D16.8 L102/2 X 5
146587	1	PIN D16.8 X 65
146723	1	HEX NIPPLE 1/4" - 1/8" BSP
146745	1	TEE BLOCK M18X1.5-3/8"X1/4"
146835	1	HEX NIPPLE 1/4" - 3/8" BSP
146839	1	HEX NIPPLE 1/4"X3/8" BSP 0.7MM
146845	1	HEX NIPPLE 1/4"X1/4"
146992	1	BUSHING F.CYLINDER
151872	1	BUSHING D22.0/18.0 10MM
160802	1	MOUNT PLATE F.HYD SOLENOID'HZ'
160803	1	COVER PLATE F.HYD SOLENOID'HZ'
210728	1	BEARING F.LINK HEAD M17
231906	1	HEX NIPPLE 3/8"BSP X 1/2"NPT
231907	1	HEX NIPPLE 1/4"BSP X 1/2"NPT
232109	1	FITT.HY TEE 1/4"BSP UNION
232175	1	TEE 1/4"M X 1/4"F X 1/4"M BSP
240866	1	DOWTYSEAL 3/8"
241404	1	DOWTY SEAL 1/4"
242288	1	SEAL F. HYD ACCUMULATOR TWIN
283699	1	GREASE NIPPLE M6X1
284265	1	PLUG BREATHER 1/4" F/CYLINDER
284412	1	HOSE HY 3/8" X 315" STR+STR
284919	1	HYD. ACCUMULATOR F. CM875/1200
334206	1	DUST HOOD FOR HY-COUPLING
410185	1	BOLT HEX 8.8 DEL M6X16
420567	1	BOLT HEX 8.8 DEL M8X30 FT
420847	1	BOLT HEX 8.8 DEL M8X85
430721	1	BOLT HEX 8.8 DEL M12X40 FT
430802	1	BOLT HEX 8.8 DEL M12X75
460143	1	LOCK NUT M8 SST A2 DIN985
460261	1	NUT HEX M6X1.00 LOCK DIN985 A2 SS
460703	1	NUT HEX M12X1.75 LOCK DIN985A2 SS
461198	1	NUT HEX M16X2 JAMB
461249	1	NUT M22X1.5 DIN439B
480384	1	PIN COTTER 3/16 x 1-1/2"
615654	1	PIN D25 X 123 F. PARALIFT
615655	1	PIN D25 X 156 F. PARALIFT
784000	1	HOSE HY X 1/4 X 118.00"STR+ELB
784001	1	HOSE HY X 1/4 X 067.00"STR+ELB
784005	1	HOSE HY X 1/4 X 037.38"STR+ELB
784019	1	HOSE HY X 1/4 X 078.75"STR+ELB
784045	1	HOSE HY X 1/4 X 157.50"STR+STR
784062	1	HOSE HY X 1/4 X 098.50"ELB+ELB
784063	1	HOSE HY X 1/4 X 086.62"ELB+ELB
784075	1	HOSE HY X 1/4 X 057.00"
784139	1	HOSE HY X 1/4 X 216.50"STR+STR
10466003	1	COUPLER PIONEER 8010-04 1/2NPT
21091900	1	LINK HEAD M16 x D17 DELTA
28117300	1	SEAL KIT 78120600/07/43
75074800	1	SEAL KIT 78123400/42
		SEAL KIT FOR 78100203 CYLINDER
75075000	1	SEAL KIT 78122600/27/28/29
78100203	1	CYL. D25/12-50/72531000 W/BSP ADAPT
78120700	1	SIN.CYL.Ø60/25-725 2XØ25 LEFT
78122700	1	CYLINDER D40/22X300MM RED
78122900	1	CYLINDER 40/22X300MM RED
78125600	1	SIN.CYL.Ø60/25_725_2XØ25 RIGHT

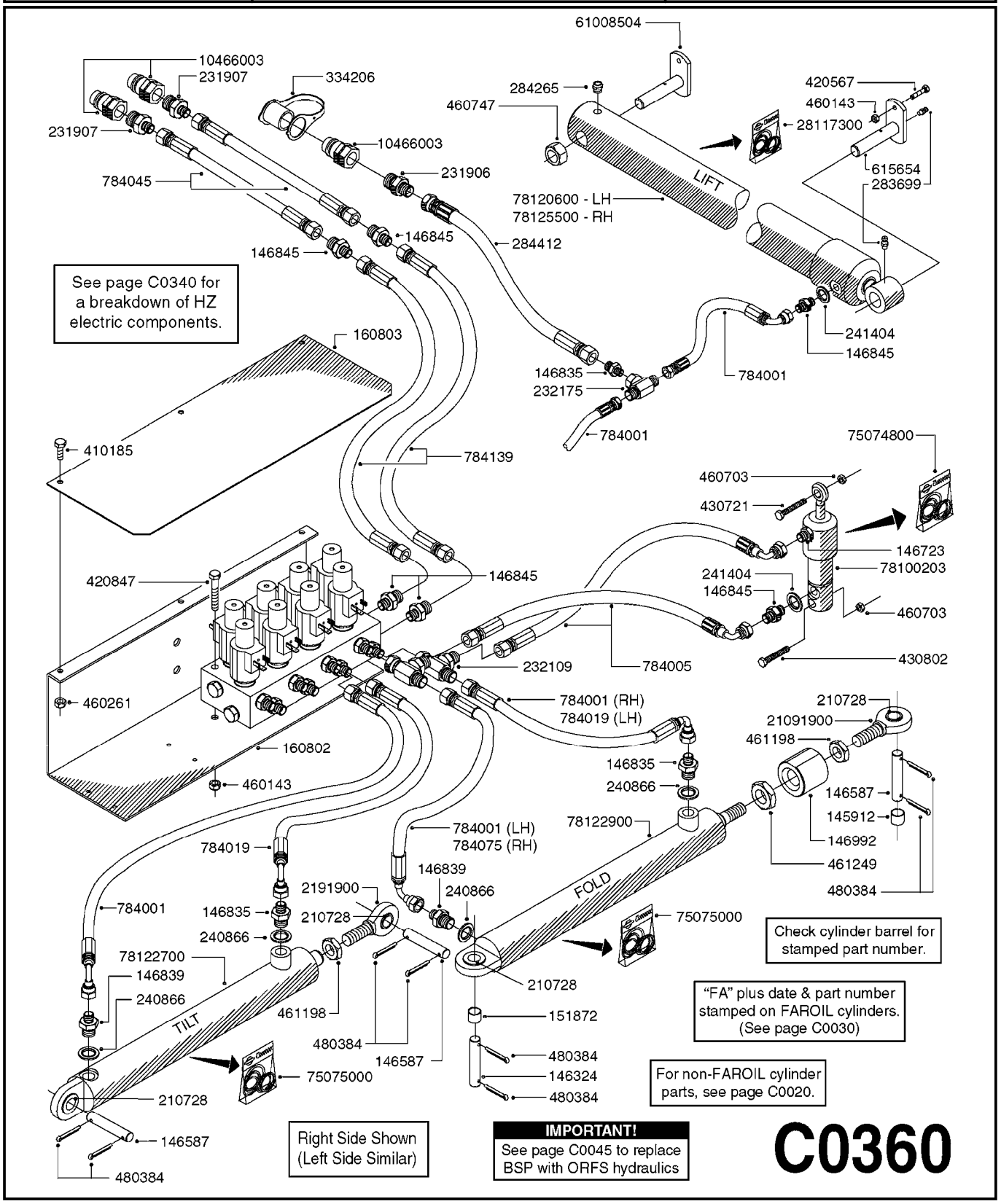
61008504
10466003
231907
334206
284265
460747
420567
460143
28117300
231907
10466003
231906
784045
615654
283699
LIFT
78120600 - LH
78125500 - RH
146845
146845
284412
See page C0340 for a breakdown of HZ electric components.
160803
241404
146845
146835
232175
784001
784001
410185
784139
75074800
460703
430721
146723
78100203
420847
146845
241404
146845
460703
430802
232109
784005
460261
784001 (RH)
784019 (LH)
210728
21091900
461198
160802
146835
240866
460143
146587
145912
146992
461249
480384
784001 (LH)
784075 (RH)
78122900
784019
146839
2191900
240866
FOLD
784001
146835
210728
240866
75075000
Check cylinder barrel for stamped part number.
78122700
146839
240866
210728
TILT
461198
151872
"FA" plus date & part number stamped on FAROIL cylinders. (See page C0030)
480384
146587
480384
146324
480384
75075000
For non-FAROIL cylinder parts, see page C0020.
210728
146587
480384
Right Side Shown (Left Side Similar)
IMPORTANT!
See page C0045 to replace BSP with ORFS hydraulics
C0360

Agroparts: www.HARDI-INTERNATIONAL.com

HYD EAGLE HZ SPB 45'-66' - NAV
C0360-HIN, 09:01:18

Date 12.08.2020 11:36

parts-n°	order qty	description
145912	1	BUSHING D19.8/D17.0X7MM
146324	1	SHAFT D16.8 L102/2 X 5
146587	1	PIN D16.8 X 65
146723	1	HEX NIPPLE 1/4" - 1/8" BSP
146835	1	HEX NIPPLE 1/4" - 3/8" BSP
146839	1	HEX NIPPLE 1/4"X3/8" BSP 0.7MM
146845	1	HEX NIPPLE 1/4"X1/4"
146992	1	BUSHING F.CYLINDER
151872	1	BUSHING D22.0/18.0 10MM
160802	1	MOUNT PLATE F.HYD SOLENOID'HZ'
160803	1	COVER PLATE F.HYD SOLENOID'HZ'
210728	1	BEARING F.LINK HEAD M17
231906	1	HEX NIPPLE 3/8"BSP X 1/2"NPT
231907	1	HEX NIPPLE 1/4"BSP X 1/2"NPT
232109	1	FITT.HY TEE 1/4"BSP UNION
232175	1	TEE 1/4"M X 1/4"F X 1/4"M BSP
240866	1	DOWTYSEAL 3/8"
241404	1	DOWTY SEAL 1/4"
283699	1	GREASE NIPPLE M6X1
284265	1	PLUG BREATHER 1/4" F/CYLINDER
284412	1	HOSE HY 3/8" X 315" STR+STR
334206	1	DUST HOOD FOR HY-COUPLING
410185	1	BOLT HEX 8.8 DEL M6X16
420567	1	BOLT HEX 8.8 DEL M8X30 FT
420847	1	BOLT HEX 8.8 DEL M8X85
430721	1	BOLT HEX 8.8 DEL M12X40 FT
430802	1	BOLT HEX 8.8 DEL M12X75
460143	1	LOCK NUT M8 SST A2 DIN985
460261	1	NUT HEX M6X1.00 LOCK DIN985 A2 SS
460703	1	NUT HEX M12X1.75 LOCK DIN985A2 SS
460747	1	NUT HEX M24 LOCK
461198	1	NUT HEX M16X2 JAMB
461249	1	NUT M22X1.5 DIN439B
480384	1	PIN COTTER 3/16 x 1-1/2"
615654	1	PIN D25 X 123 F. PARALIFT
784001	1	HOSE HY X 1/4 X 067.00"STR+ELB
784005	1	HOSE HY X 1/4 X 037.38"STR+ELB
784019	1	HOSE HY X 1/4 X 078.75"STR+ELB
784045	1	HOSE HY X 1/4 X 157.50"STR+STR
784075	1	HOSE HY X 1/4 X 057.00"
784139	1	HOSE HY X 1/4 X 216.50"STR+STR
10466003	1	COUPLER PIONEER 8010-04 1/2NPT
21091900	1	LINK HEAD M16 x D17 DELTA
28117300	1	SEAL KIT 78120600/07/43
61008504	1	MOUNTING BOLT Ø25X98/M24
75074800	1	SEAL KIT 78123400/42
		SEAL KIT FOR 78100203 CYLINDER
75075000	1	SEAL KIT 78122600/27/28/29
78100203	1	CYL. D25/12-50/72531000 W/BSP ADAPT
78120600	1	CYLINDER 60/25 X 662 NAV PAR L
78122700	1	CYLINDER D40/22X300MM RED
78122900	1	CYLINDER 40/22X300MM RED
78125500	1	CYLINDER 60/25 X 662 NAV PAR R

HYD EAGLE HZ SPB 45-66' RANGER
C0370-HIN, 08:10:18

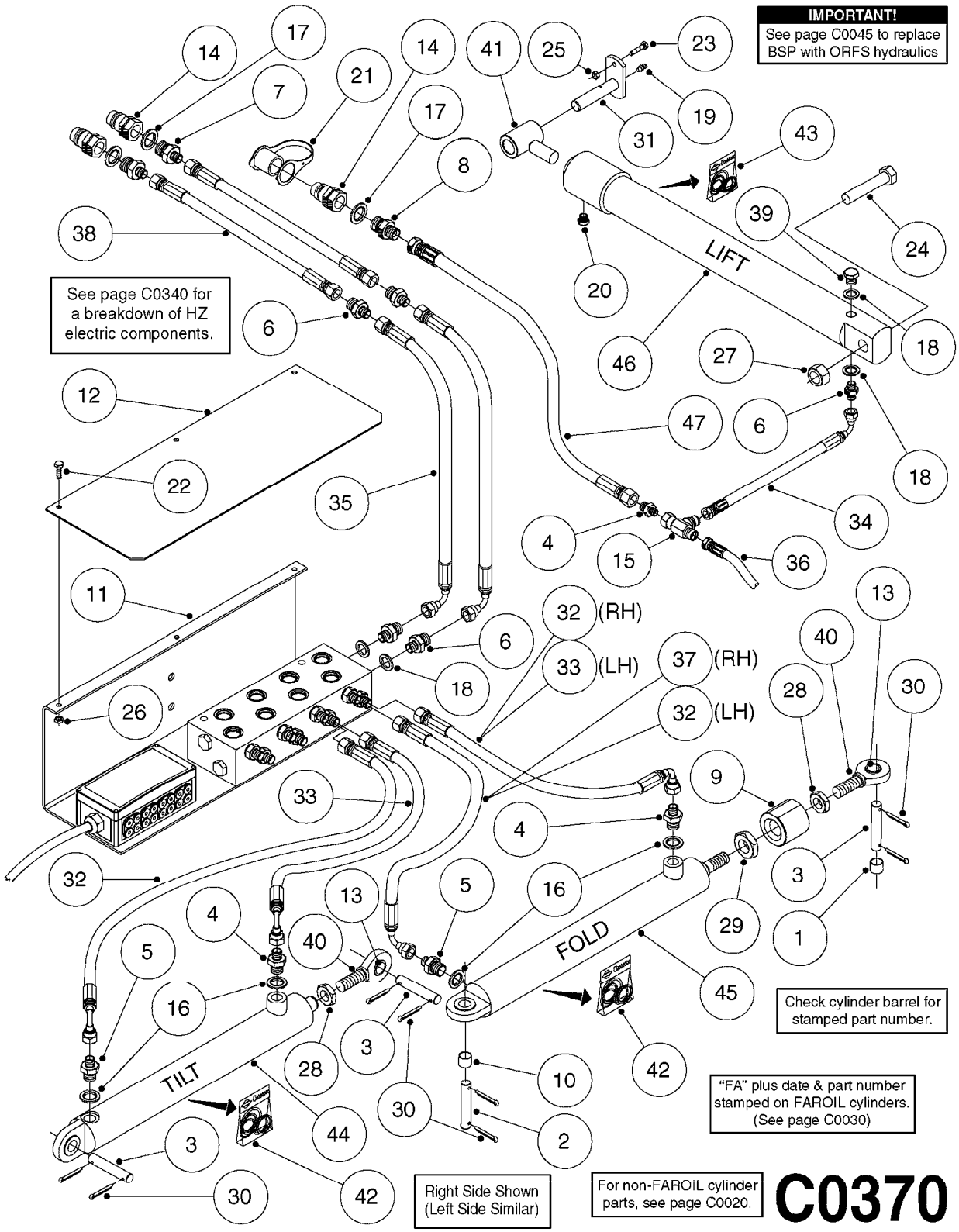

C0370

Agroparts: www.HARDI-INTERNATIONAL.com

HYD EAGLE HZ SPB 45-66' RANGER
C0370-HIN, 08:10:18

Date 12.08.2020 11:36

Pos.	parts-nº	order qty	description
1	145912	1	BUSHING D19.8/D17.0X7MM
2	146324	1	SHAFT D16.8 L102/2 X 5
3	146587	1	PIN D16.8 X 65
4	146835	1	HEX NIPPLE 1/4" - 3/8" BSP
5	146839	1	HEX NIPPLE 1/4"X3/8" BSP 0.7MM
6	146845	1	HEX NIPPLE 1/4"X1/4"
7	146846	1	HEX NIPPLE 1/2" X 1/4"
8	146847	1	HEX NIPPLE 1/2"X3/8"
9	146992	1	BUSHING F.CYLINDER
10	151872	1	BUSHING D22.0/18.0 10MM
11	160802	1	MOUNT PLATE F.HYD SOLENOID'HZ'
12	160803	1	COVER PLATE F.HYD SOLENOID'HZ'
13	210728	1	BEARING F.LINK HEAD M17
14	230311	1	QUICK COUPLING 1/2"
15	232109	1	FITT.HY TEE 1/4"BSP UNION
16	240866	1	DOWTYSEAL 3/8"
17	241356	1	DOWTYSEAL 1/2"
18	241404	1	DOWTY SEAL 1/4"
19	283699	1	GREASE NIPPLE M6X1
20	284265	1	PLUG BREATHER 1/4" F/CYLINDER
21	334206	1	DUST HOOD FOR HY-COUPLING
22	410185	1	BOLT HEX 8.8 DEL M6X16
23	420567	1	BOLT HEX 8.8 DEL M8X30 FT
24	430918	1	M20X100 DIN 931-8.8 DEL
25	460143	1	LOCK NUT M8 SST A2 DIN985
26	460261	1	NUT HEX M6X1.00 LOCK DIN985 A2 SS
27	460806	1	NUT HEX M20X2.50 LOCK DIN985A2 SS
28	461198	1	NUT HEX M16X2 JAMB
29	461249	1	NUT M22X1.5 DIN439B
30	480384	1	PIN COTTER 3/16 x 1-1/2"
31	615654	1	PIN D25 X 123 F. PARALIFT
32	784001	1	HOSE HY X 1/4 X 067.00"STR+ELB
33	784019	1	HOSE HY X 1/4 X 078.75"STR+ELB
34	784037	1	HOSE HY X 1/4" x 130"STR+ELB
35	784049	1	HOSE HY X 1/4" X 240"STR+ELB
36	784069	1	HOSE HY X 1/4 X 90.5" STR+ELB
37	784075	1	HOSE HY X 1/4 X 057.00"
38	784087	1	HOSE HY X 1/4 X 126.00"STR+STR
39	14010400	1	PLUG 1/4" BSP
40	21091900	1	LINK HEAD M16 x D17 DELTA
41	61011803	1	ROD END M24X2 25M 06'07'
42	75075000	1	SEAL KIT 78122600/27/28/29
43	75075200	1	SEAL KIT 78120900/14/50
44	78122700	1	CYLINDER D40/22X300MM RED
45	78122900	1	CYLINDER 40/22X300MM RED
46	78128800	1	CYLINDER, D50/30-500
47	78563000	1	HY.HO.3/8"L= 6150 STR-STR

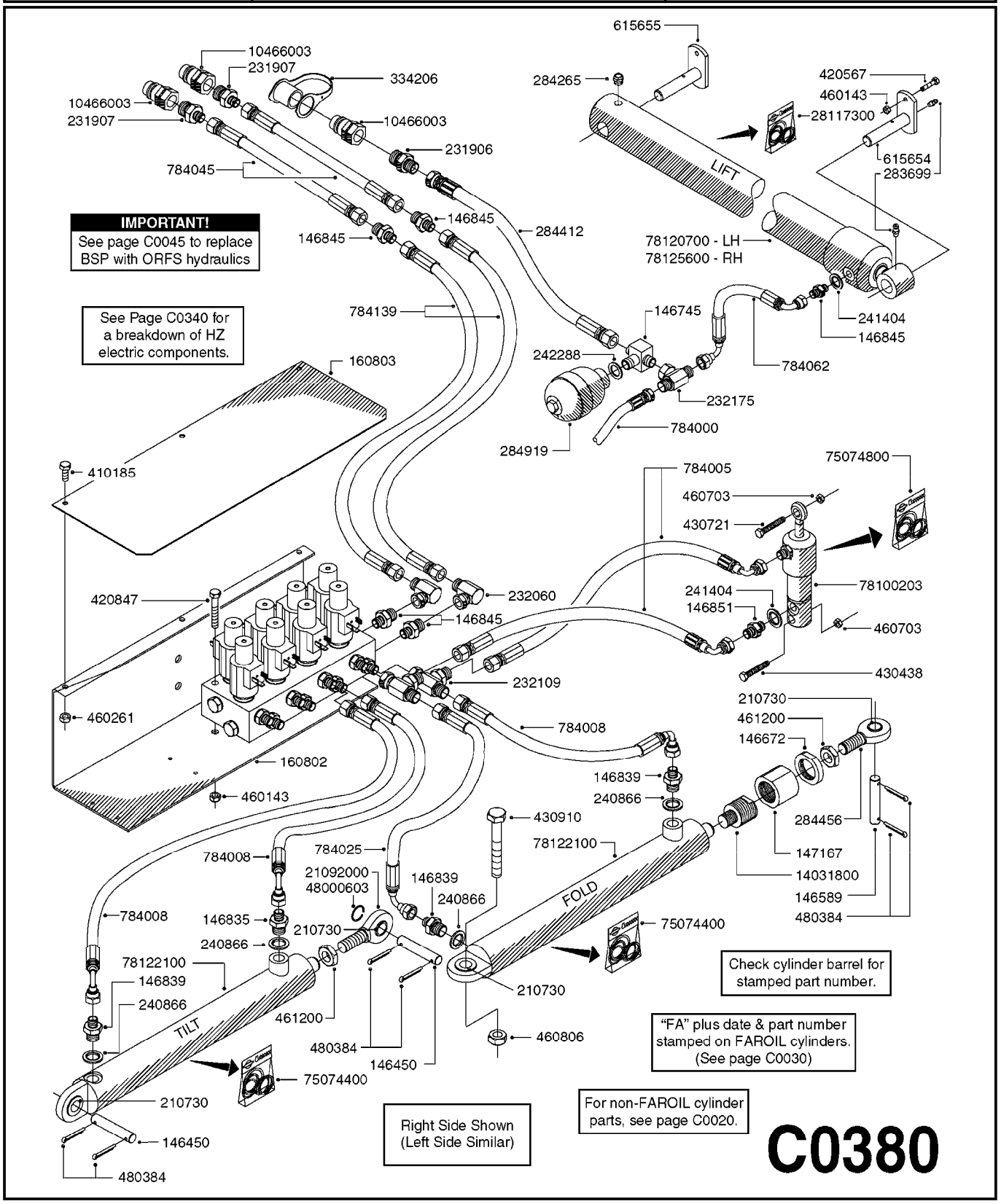
615655
10466003
231907
334206
284265
420567
460143
28117300
10466003
231907
10466003
231906
615654
283699
784045
LIFT
146845
284412
146845
78120700 - LH
78125600 - RH
IMPORTANT!
See page C0045 to replace BSP with ORFS hydraulics
See Page C0340 for a breakdown of HZ electric components.
784139
146745
241404
146845
160803
242288
784062
232175
784000
284919
410185
784005
75074800
460703
430721
420847
232060
241404
146851
78100203
146845
460703
430438
232109
210730
461200
146672
460261
784008
160802
146839
240866
460143
430910
284456
784025
78122100
147167
784008
21092000
48000603
146839
14031800
240866
146589
FOLD
480384
784008
146835
210730
75074400
240866
78122100
146839
240866
210730
Check cylinder barrel for stamped part number.
TILT
461200
460806
480384
146450
75074400
"FA" plus date & part number stamped on FAROIL cylinders. (See page C0030)
210730
For non-FAROIL cylinder parts, see page C0020.
Right Side Shown (Left Side Similar)
146450
480384
C0380

Agroparts: www.HARDI-INTERNATIONAL.com

HYD EAGLE HZ SPB 80'-90' - CM
C0380-HIN, 29:09:17

Date 12.08.2020 11:36

parts-n°	order qty	description
146450	1	PIN D19.8 X 75 WITH 2 X D5
146589	1	PIN D19.8 X 65
146672	1	NUT HEX LOCK F.ADJUSTER
146745	1	TEE BLOCK M18X1.5-3/8"X1/4"
146835	1	HEX NIPPLE 1/4" - 3/8" BSP
146839	1	HEX NIPPLE 1/4"X3/8" BSP 0.7MM
146845	1	HEX NIPPLE 1/4"X1/4"
146851	1	HEX NIPPLE 1/4"x1/4" 0.7MM
147167	1	BUSHING D50/D36X45MM
160802	1	MOUNT PLATE F.HYD SOLENOID'HZ'
160803	1	COVER PLATE F.HYD SOLENOID'HZ'
210730	1	BEARING F.LINK HEAD M20
231906	1	HEX NIPPLE 3/8"BSP X 1/2"NPT
231907	1	HEX NIPPLE 1/4"BSP X 1/2"NPT
232060	1	HY.ELBOW 1/4" BSP SWIVEL
232109	1	FITT.HY TEE 1/4"BSP UNION
232175	1	TEE 1/4"M X 1/4"F X 1/4"M BSP
240866	1	DOWTYSEAL 3/8"
241404	1	DOWTY SEAL 1/4"
242288	1	SEAL F. HYD ACCUMULATOR TWIN
283699	1	GREASE NIPPLE M6X1
284265	1	PLUG BREATHER 1/4" F/CYLINDER
284412	1	HOSE HY 3/8" X 315" STR+STR
284456	1	LINK HEAD M20 X D20 L=30
284919	1	HYD. ACCUMULATOR F. CM875/1200
334206	1	DUST HOOD FOR HY-COUPLING
410185	1	BOLT HEX 8.8 DEL M6X16
420567	1	BOLT HEX 8.8 DEL M8X30 FT
420847	1	BOLT HEX 8.8 DEL M8X85
430438	1	BOLT HEX 8.8 DEL M12X65
430721	1	BOLT HEX 8.8 DEL M12X40 FT
430910	1	BOLT HEX 8.8 DEL M20X110
460143	1	LOCK NUT M8 SST A2 DIN985
460261	1	NUT HEX M6X1.00 LOCK DIN985 A2 SS
460703	1	NUT HEX M12X1.75 LOCK DIN985A2 SS
460806	1	NUT HEX M20X2.50 LOCK DIN985A2 SS
461200	1	NUT HEX M20X1.5 JAMB.
480384	1	PIN COTTER 3/16 x 1-1/2"
615654	1	PIN D25 X 123 F. PARALIFT
615655	1	PIN D25 X 156 F. PARALIFT
784000	1	HOSE HY X 1/4 X 118.00"STR+ELB
784005	1	HOSE HY X 1/4 X 037.38"STR+ELB
784008	1	HOSE HY X 1/4" X 98.4"STR+ELB
784025	1	HOSE HY X 1/4" x 86.6"STR+ELB
784045	1	HOSE HY X 1/4 X 157.50"STR+STR
784062	1	HOSE HY X 1/4 X 098.50"ELB+ELB
784139	1	HOSE HY X 1/4 X 216.50"STR+STR
10466003	1	COUPLER PIONEER 8010-04 1/2NPT
14031800	1	ADAPTOR F.HY CYLINDER L=40
21092000	1	LINK HEAD M20 x D20 L=78 DELTA
28117300	1	SEAL KIT 78120600/07/43
48000603	1	SNAP RING, Ø36X1.5 F.210730
75074400	1	SEAL KIT 78121800/21/44
75074800	1	SEAL KIT 78123400/42
		SEAL KIT FOR 78100203 CYLINDER
78100203	1	CYL. D25/12-50/72531000 W/BSP ADAPT
78120700	1	SIN.CYL.Ø60/25-725 2XØ25 LEFT
78122100	1	CYLINDER DOUBLE D50/25-298
78125600	1	SIN.CYL.Ø60/25_725_2XØ25 RIGHT

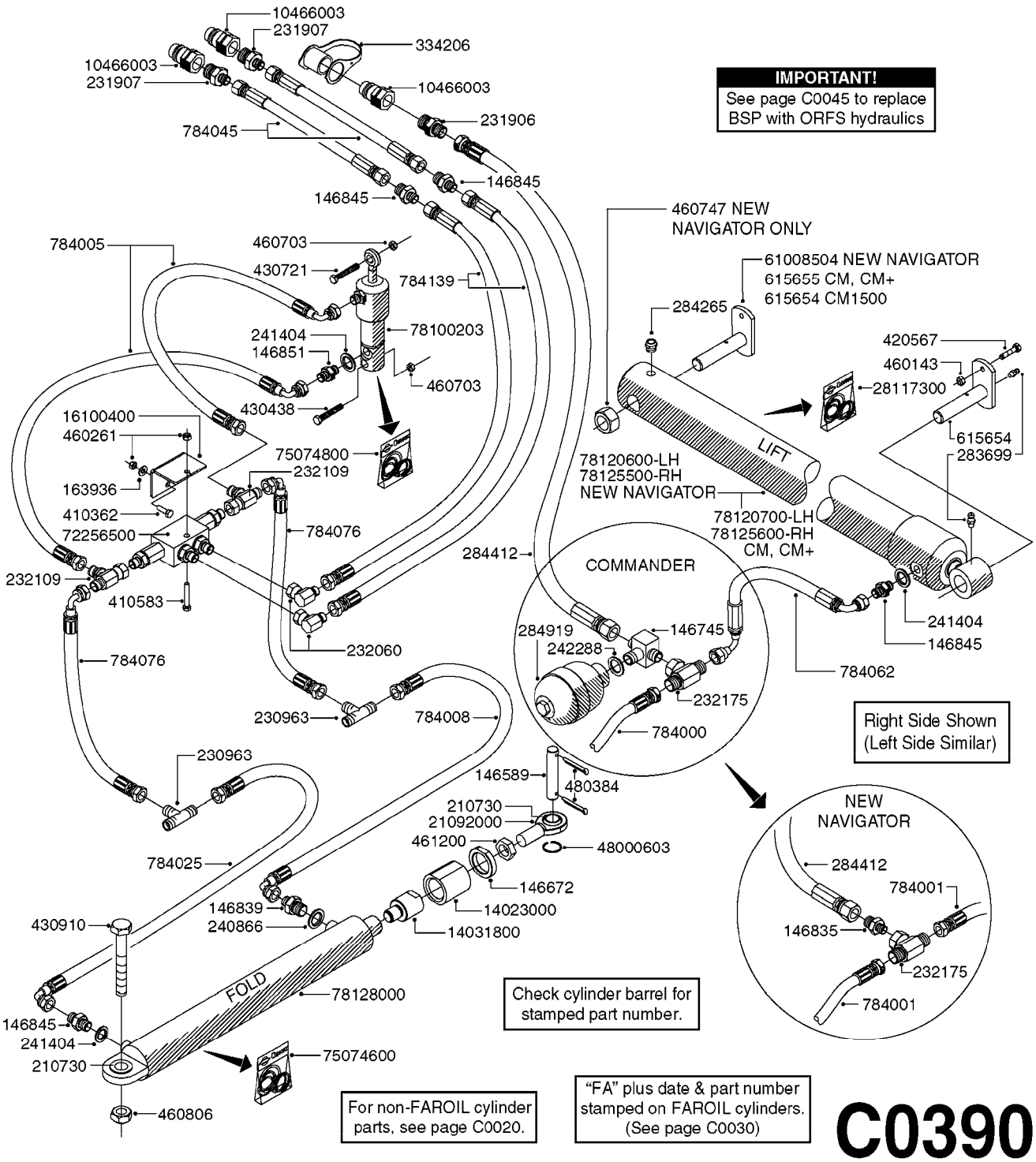
10466003
231907
334206
10466003
231907
10466003
231906
784045
146845
146845
IMPORTANT!
See page C0045 to replace BSP with ORFS hydraulics
460747 NEW NAVIGATOR ONLY
784005
460703
430721
784139
61008504 NEW NAVIGATOR
615655 CM, CM+
615654 CM1500
284265
241404
146851
78100203
460703
420567
460143
28117300
430438
16100400
460261
75074800
232109
615654
283699
163936
410362
72256500
784076
78120600-LH
78125500-RH
NEW NAVIGATOR
LIFT
78120700-LH
78125600-RH
CM, CM+
284412
COMMANDER
232109
410583
241404
146845
284919
146745
242288
232060
784062
784076
232175
230963
784008
784000
Right Side Shown
(Left Side Similar)
230963
146589
480384
210730
21092000
461200
48000603
NEW NAVIGATOR
284412
784025
146672
784001
146839
14023000
430910
240866
14031800
146835
232175
FOLD
78128000
784001
Check cylinder barrel for stamped part number.
146845
241404
210730
75074600
460806
For non-FAROIL cylinder parts, see page C0020.
"FA" plus date & part number stamped on FAROIL cylinders. (See page C0030)

C0390

Agroparts: www.HARDI-INTERNATIONAL.com

HYD EAGLE SPC HY 80'-100'
C0390-HIN, 29:09:17

Date 12.08.2020 11:36

parts-n°	order qty	description
146589	1	PIN D19.8 X 65
146672	1	NUT HEX LOCK F.ADJUSTER
146745	1	TEE BLOCK M18X1.5-3/8"X1/4"
146835	1	HEX NIPPLE 1/4" - 3/8" BSP
146839	1	HEX NIPPLE 1/4"X3/8" BSP 0.7MM
146845	1	HEX NIPPLE 1/4"X1/4"
146851	1	HEX NIPPLE 1/4"x1/4" 0.7MM
163936	1	WASHER D15/D6.2X1
210730	1	BEARING F.LINK HEAD M20
230963	1	TEE 1/4"M X 1/4"M X 1/4"M BSP
231906	1	HEX NIPPLE 3/8"BSP X 1/2"NPT
231907	1	HEX NIPPLE 1/4"BSP X 1/2"NPT
232060	1	HY.ELBOW 1/4" BSP SWIVEL
232109	1	FITT.HY TEE 1/4"BSP UNION
232175	1	TEE 1/4"M X 1/4"F X 1/4"M BSP
240866	1	DOWTYSEAL 3/8"
241404	1	DOWTY SEAL 1/4"
242288	1	SEAL F. HYD ACCUMULATOR TWIN
283699	1	GREASE NIPPLE M6X1
284265	1	PLUG BREATHER 1/4" F/CYLINDER
284412	1	HOSE HY 3/8" X 315" STR+STR
284919	1	HYD. ACCUMULATOR F. CM875/1200
334206	1	DUST HOOD FOR HY-COUPLING
410362	1	BOLT HEX 8.8 SS M6X20
410583	1	BOLT HEX 8.8 DEL M6X40
420567	1	BOLT HEX 8.8 DEL M8X30 FT
430438	1	BOLT HEX 8.8 DEL M12X65
430721	1	BOLT HEX 8.8 DEL M12X40 FT
430910	1	BOLT HEX 8.8 DEL M20X110
460143	1	LOCK NUT M8 SST A2 DIN985
460261	1	NUT HEX M6X1.00 LOCK DIN985 A2 SS
460703	1	NUT HEX M12X1.75 LOCK DIN985A2 SS
460747	1	NUT HEX M24 LOCK
460806	1	NUT HEX M20X2.50 LOCK DIN985A2 SS
461200	1	NUT HEX M20X1.5 JAMB.
480384	1	PIN COTTER 3/16 x 1-1/2"
615654	1	PIN D25 X 123 F. PARALIFT
615655	1	PIN D25 X 156 F. PARALIFT
784000	1	HOSE HY X 1/4 X 118.00"STR+ELB
784001	1	HOSE HY X 1/4 X 067.00"STR+ELB
784005	1	HOSE HY X 1/4 X 037.38"STR+ELB
784008	1	HOSE HY X 1/4" X 98.4"STR+ELB
784025	1	HOSE HY X 1/4" x 86.6"STR+ELB
784045	1	HOSE HY X 1/4 X 157.50"STR+STR
784062	1	HOSE HY X 1/4 X 098.50"ELB+ELB
784076	1	HOSE,HY,1/4" L=8.5" STR-ELB
784139	1	HOSE HY X 1/4 X 216.50"STR+STR
10466003	1	COUPLER PIONEER 8010-04 1/2NPT
14023000	1	BUSHING Ø50.0/36.0 L=52 DEL
14031800	1	ADAPTOR F.HY CYLINDER L=40
16100400	1	PLATE 3 X 60 X 91 HY BLOCK MT
21092000	1	LINK HEAD M20 x D20 L=78 DELTA
28117300	1	SEAL KIT 78120600/07/43
48000603	1	SNAP RING, Ø36X1.5 F.210730
61008504	1	MOUNTING BOLT Ø25X98/M24
72256500	1	DOUB.PILOT STEERED COUNT.VALVE
75074600	1	SEAL KIT 78120500/49
75074800	1	SEAL KIT 78123400/42
		SEAL KIT FOR 78100203 CYLINDER
78100203	1	CYL. D25/12-50/72531000 W/BSP ADAPT
78120600	1	CYLINDER 60/25 X 662 NAV PAR L

HYD EAGLE SPC HY 80'-100'
C0390-HIN, 29:09:17

Date 12.08.2020 11:36

parts-n°	order qty	description
78120700	1	SIN.CYL.Ø60/25-725 2XØ25 LEFT
78125500	1	CYLINDER 60/25 X 662 NAV PAR R
78125600	1	SIN.CYL.Ø60/25_725_2XØ25 RIGHT
78128000	1	CYLINDER DOUB. D60/30 L=300 09

HYD EAGLE SPC HZ 80'-100'
C0400-HIN, 29:09:17

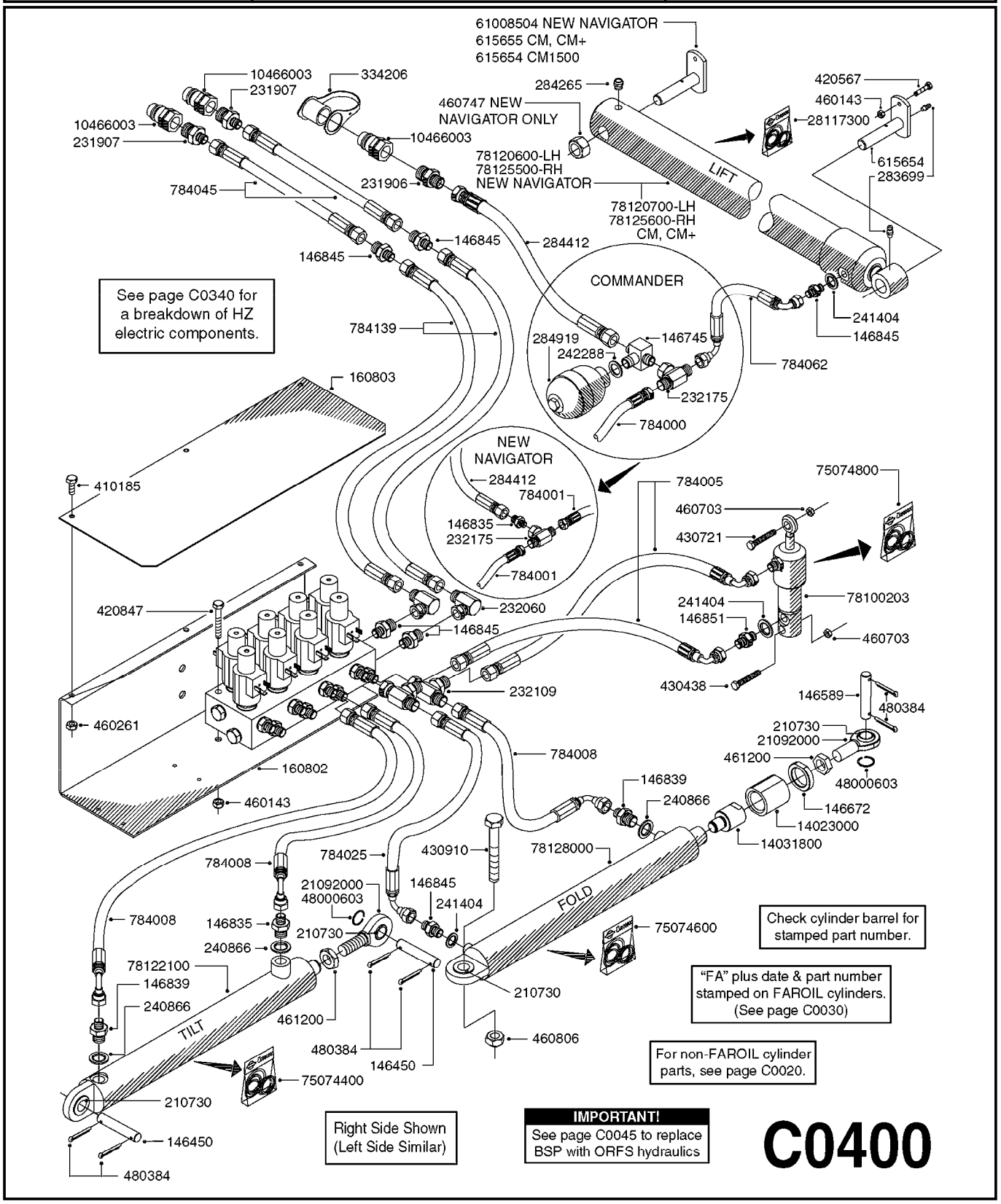

C0400

Agroparts: www.HARDI-INTERNATIONAL.com

HYD EAGLE SPC HZ 80'-100'
C0400-HIN, 29:09:17

Date 12.08.2020 11:36

parts-n°	order qty	description
146450	1	PIN D19.8 X 75 WITH 2 X D5
146589	1	PIN D19.8 X 65
146672	1	NUT HEX LOCK F.ADJUSTER
146745	1	TEE BLOCK M18X1.5-3/8"X1/4"
146835	1	HEX NIPPLE 1/4" - 3/8" BSP
146839	1	HEX NIPPLE 1/4"X3/8" BSP 0.7MM
146845	1	HEX NIPPLE 1/4"X1/4"
146851	1	HEX NIPPLE 1/4"x1/4" 0.7MM
160802	1	MOUNT PLATE F.HYD SOLENOID'HZ'
160803	1	COVER PLATE F.HYD SOLENOID'HZ'
210730	1	BEARING F.LINK HEAD M20
231906	1	HEX NIPPLE 3/8"BSP X 1/2"NPT
231907	1	HEX NIPPLE 1/4"BSP X 1/2"NPT
232060	1	HY.ELBOW 1/4" BSP SWIVEL
232109	1	FITT.HY TEE 1/4"BSP UNION
232175	1	TEE 1/4"M X 1/4"F X 1/4"M BSP
240866	1	DOWTYSEAL 3/8"
241404	1	DOWTY SEAL 1/4"
242288	1	SEAL F. HYD ACCUMULATOR TWIN
283699	1	GREASE NIPPLE M6X1
284265	1	PLUG BREATHER 1/4" F/CYLINDER
284412	1	HOSE HY 3/8" X 315" STR+STR
284919	1	HYD. ACCUMULATOR F. CM875/1200
334206	1	DUST HOOD FOR HY-COUPLING
410185	1	BOLT HEX 8.8 DEL M6X16
420567	1	BOLT HEX 8.8 DEL M8X30 FT
420847	1	BOLT HEX 8.8 DEL M8X85
430438	1	BOLT HEX 8.8 DEL M12X65
430721	1	BOLT HEX 8.8 DEL M12X40 FT
430910	1	BOLT HEX 8.8 DEL M20X110
460143	1	LOCK NUT M8 SST A2 DIN985
460261	1	NUT HEX M6X1.00 LOCK DIN985 A2 SS
460703	1	NUT HEX M12X1.75 LOCK DIN985A2 SS
460747	1	NUT HEX M24 LOCK
460806	1	NUT HEX M20X2.50 LOCK DIN985A2 SS
461200	1	NUT HEX M20X1.5 JAMB.
480384	1	PIN COTTER 3/16 x 1-1/2"
615654	1	PIN D25 X 123 F. PARALIFT
615655	1	PIN D25 X 156 F. PARALIFT
784000	1	HOSE HY X 1/4 X 118.00"STR+ELB
784001	1	HOSE HY X 1/4 X 067.00"STR+ELB
784005	1	HOSE HY X 1/4 X 037.38"STR+ELB
784008	1	HOSE HY X 1/4" X 98.4"STR+ELB
784025	1	HOSE HY X 1/4" x 86.6"STR+ELB
784045	1	HOSE HY X 1/4 X 157.50"STR+STR
784062	1	HOSE HY X 1/4 X 098.50"ELB+ELB
784139	1	HOSE HY X 1/4 X 216.50"STR+STR
10466003	1	COUPLER PIONEER 8010-04 1/2NPT
14023000	1	BUSHING Ø50.0/36.0 L=52 DEL
14031800	1	ADAPTOR F.HY CYLINDER L=40
21092000	1	LINK HEAD M20 x D20 L=78 DELTA
28117300	1	SEAL KIT 78120600/07/43
48000603	1	SNAP RING, Ø36X1.5 F.210730
61008504	1	MOUNTING BOLT Ø25X98/M24
75074400	1	SEAL KIT 78121800/21/44
75074600	1	SEAL KIT 78120500/49
75074800	1	SEAL KIT 78123400/42
		SEAL KIT FOR 78100203 CYLINDER
78100203	1	CYL. D25/12-50/72531000 W/BSP ADAPT
78120600	1	CYLINDER 60/25 X 662 NAV PAR L
78120700	1	SIN.CYL.Ø60/25-725 2XØ25 LEFT

HYD EAGLE SPC HZ 80'-100'
C0400-HIN, 29:09:17

Date 12.08.2020 11:36

parts-n°	order qty	description
78122100	1	CYLINDER DOUBLE D50/25-298
78125500	1	CYLINDER 60/25 X 662 NAV PAR R
78125600	1	SIN.CYL.Ø60/25_725_2XØ25 RIGHT
78128000	1	CYLINDER DOUB. D60/30 L=300 09

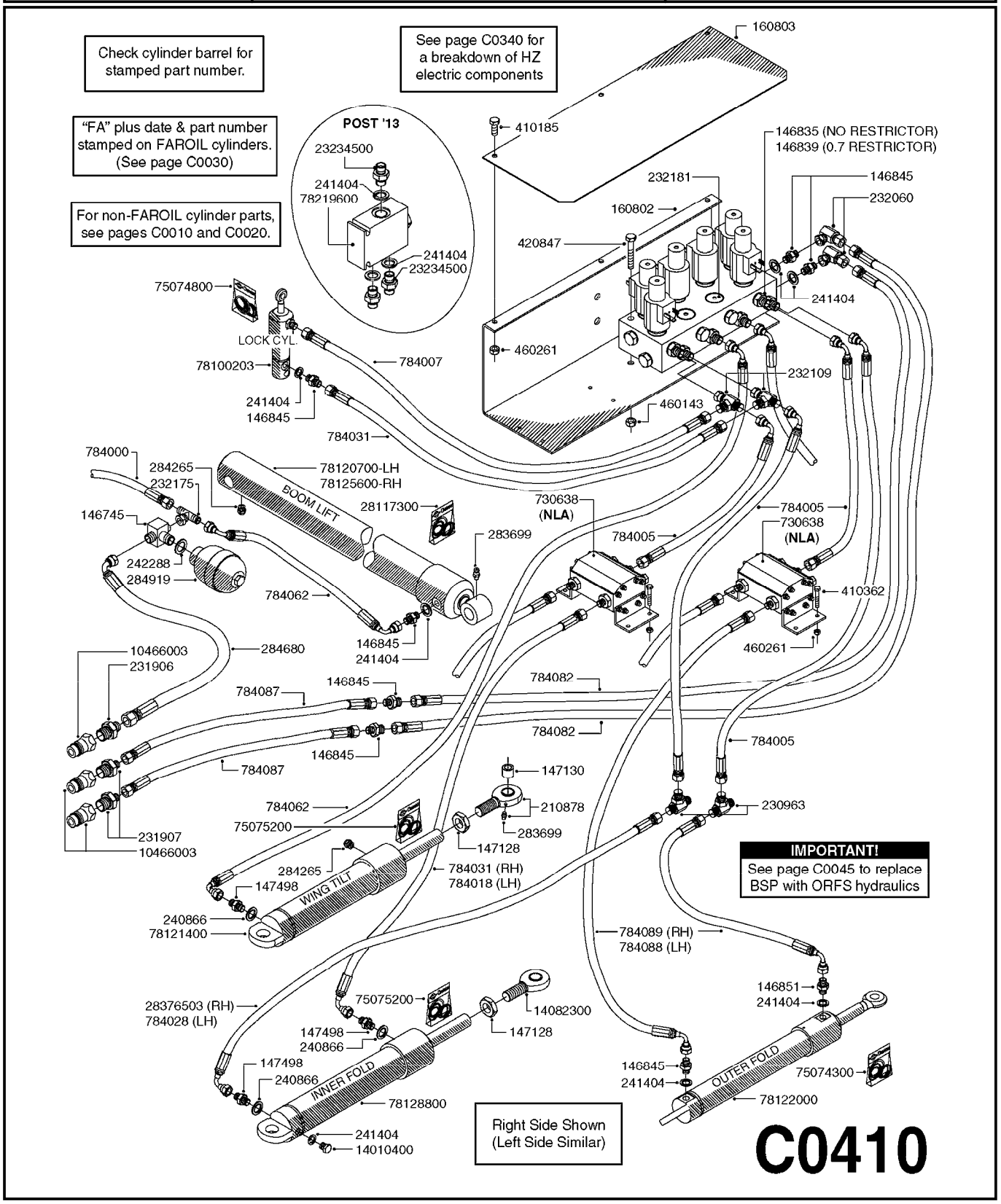
Check cylinder barrel for stamped part number.
See page C0340 for a breakdown of HZ electric components
"FA" plus date & part number stamped on FAROIL cylinders. (See page C0030)
For non-FAROIL cylinder parts, see pages C0010 and C0020.
POST '13
23234500
241404
78219600
241404
23234500
160803
410185
146835 (NO RESTRICTOR)
146839 (0.7 RESTRICTOR)
232181
146845
232060
160802
420847
241404
75074800
LOCK CYL.
78100203
784007
460261
232109
241404
146845
460143
784031
784000
284265
232175
78120700-LH
78125600-RH
BOOM LIFT
28117300
730638
(NLA)
784005
730638
(NLA)
146745
283699
784005
242288
284919
784062
410362
146845
241404
460261
10466003
231906
284680
146845
784082
784087
784082
146845
784005
784087
147130
784062
210878
230963
75075200
283699
231907
10466003
147128
284265
784031 (RH)
784018 (LH)
147498
WING TILT
IMPORTANT!
See page C0045 to replace BSP with ORFS hydraulics
240866
78121400
784089 (RH)
784088 (LH)
146851
241404
28376503 (RH)
784028 (LH)
75075200
14082300
147498
240866
147128
147498
240866
INNER FOLD
146845
241404
OUTER FOLD
75074300
78128800
78122000
241404
14010400
Right Side Shown
(Left Side Similar)
C0410

Agroparts: www.HARDI-INTERNATIONAL.com

HYD FORCE 110'
C0410-HIN, 16:11:17

Date 12.08.2020 11:36

parts-n°	order qty	description
146745	1	TEE BLOCK M18X1.5-3/8"X1/4"
146835	1	HEX NIPPLE 1/4" - 3/8" BSP
146839	1	HEX NIPPLE 1/4"X3/8" BSP 0.7MM
146845	1	HEX NIPPLE 1/4"X1/4"
146851	1	HEX NIPPLE 1/4"x1/4" 0.7MM
147128	1	NUT M24X2 NV-32
147130	1	BUSHING D25/20 20MM
147498	1	HEX NIPPLE 1/4"-1/4" 1.2mm
160802	1	MOUNT PLATE F.HYD SOLENOID'HZ'
160803	1	COVER PLATE F.HYD SOLENOID'HZ'
210878	1	LINK HEAD M24 x 55 W/ GREASE NIP. DELTA
230963	1	TEE 1/4"M X 1/4"M X 1/4"M BSP
231906	1	HEX NIPPLE 3/8"BSP X 1/2"NPT
231907	1	HEX NIPPLE 1/4"BSP X 1/2"NPT
232060	1	HY.ELBOW 1/4" BSP SWIVEL
232109	1	FITT.HY TEE 1/4"BSP UNION
232175	1	TEE 1/4"M X 1/4"F X 1/4"M BSP
232181	1	PLUG F DH HYD. VALVE
240866	1	DOWTYSEAL 3/8"
241404	1	DOWTY SEAL 1/4"
242288	1	SEAL F. HYD ACCUMULATOR TWIN
283699	1	GREASE NIPPLE M6X1
284265	1	PLUG BREATHER 1/4" F/CYLINDER
284680	1	HOSE HY 3/8" X 354.3" STR+90
284919	1	HYD. ACCUMULATOR F. CM875/1200
410185	1	BOLT HEX 8.8 DEL M6X16
410362	1	BOLT HEX 8.8 SS M6X20
420847	1	BOLT HEX 8.8 DEL M8X85
460143	1	LOCK NUT M8 SST A2 DIN985
460261	1	NUT HEX M6X1.00 LOCK DIN985 A2 SS
730638	1	HY.FLOW DIVIDER
784000	1	HOSE HY X 1/4 X 118.00"STR+ELB
784005	1	HOSE HY X 1/4 X 037.38"STR+ELB
784007	1	HOSE HY X 1/4" X 21.0"STR+STR
784018	1	HOSE HY X 1/4 X 029.5"STR+ELB
784028	1	HOSE HY X 1/4" X 53.0"STR+ELB
784031	1	HYD.HOSE CM TF 1/4"x550MM
784062	1	HOSE HY X 1/4 X 098.50"ELB+ELB
784082	1	HOSE HY X 1/4 X 197.00"STR+STR
784087	1	HOSE HY X 1/4 X 126.00"STR+STR
784088	1	HOSE HY X 1/4 X 323.0" STR+ELB
784089	1	HOSE HY X 1/4 X 338.5" STR+ELB
10466003	1	COUPLER PIONEER 8010-04 1/2NPT
14010400	1	PLUG 1/4" BSP
14082300	1	LINK EYE Ø20/M24X2 L=87.5
23234500	1	HEX NIPPLE 1/4" - 9/16"
28117300	1	SEAL KIT 78120600/07/43
28376503	1	HOSE HY X1/4X047.25"STR+ELB
75074300	1	SEALKIT78122000/23-25/30-32/46
75074800	1	SEAL KIT 78123400/42
		SEAL KIT FOR 78100203 CYLINDER
75075200	1	SEAL KIT 78120900/14/50
78100203	1	CYL. D25/12-50/72531000 W/BSP ADAPT
78120700	1	SIN.CYL.Ø60/25-725 2XØ25 LEFT
78121400	1	DOUBLE CYLINDER D 50/30-300
78122000	1	CYLINDER DOUBLE Ø40/20-300 0°
78125600	1	SIN.CYL.Ø60/25_725_2XØ25 RIGHT
78128800	1	CYLINDER, D50/30-500
78219600	1	FLOW DIVIDER FTZ '13

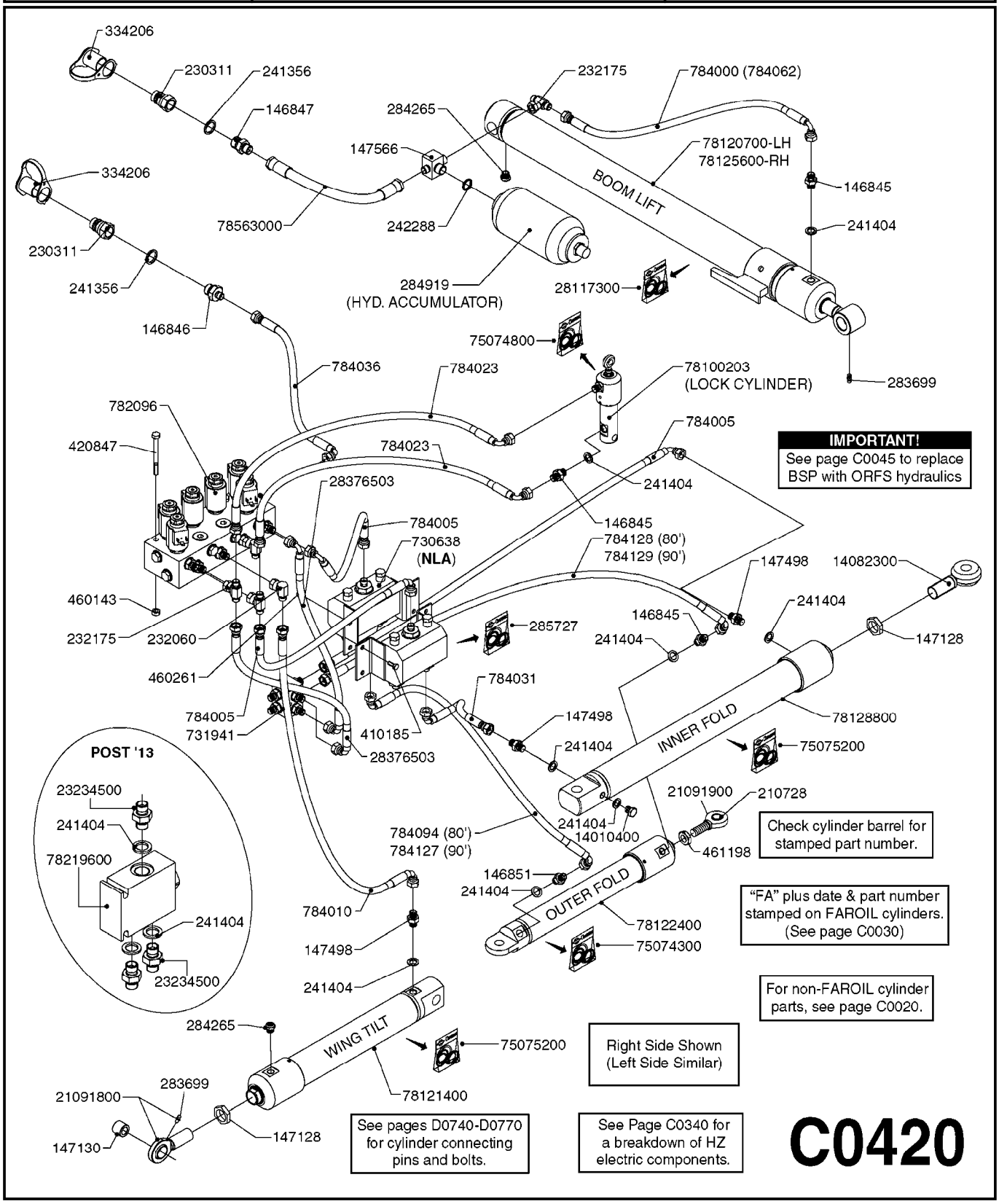
334206
230311
241356
146847
284265
232175
784000 (784062)
147566
78120700-LH
78125600-RH
334206
BOOM LIFT
146845
78563000
242288
241404
230311
284919
(HYD. ACCUMULATOR)
28117300
241356
146846
75074800
784036
784023
78100203
(LOCK CYLINDER)
283699
782096
784005
420847
784023
IMPORTANT!
See page C0045 to replace BSP with ORFS hydraulics
28376503
241404
784005
146845
730638
(NLA)
784128 (80')
784129 (90')
147498
14082300
460143
241404
146845
285727
232175
232060
241404
147128
460261
784031
784005
147498
78128800
731941
410185
241404
INNER FOLD
75075200
28376503
POST '13
23234500
21091900
210728
241404
241404
14010400
784094 (80')
784127 (90')
Check cylinder barrel for stamped part number.
78219600
461198
146851
241404
OUTER FOLD
"FA" plus date & part number stamped on FAROIL cylinders. (See page C0030)
784010
241404
78122400
147498
75074300
23234500
241404
For non-FAROIL cylinder parts, see page C0020.
284265
WING TILT
75075200
Right Side Shown
(Left Side Similar)
283699
21091800
78121400
147128
147130
See pages D0740-D0770 for cylinder connecting pins and bolts.
See Page C0340 for a breakdown of HZ electric components.
C0420

Agroparts: www.HARDI-INTERNATIONAL.com

HYD FORCE 80'-90'
C0420-HIN, 08:10:18

Date 12.08.2020 11:36

parts-n°	order qty	description
146845	1	HEX NIPPLE 1/4"X1/4"
146846	1	HEX NIPPLE 1/2" X 1/4"
146847	1	HEX NIPPLE 1/2"X3/8"
146851	1	HEX NIPPLE 1/4"x1/4" 0.7MM
147128	1	NUT M24X2 NV-32
147130	1	BUSHING D25/20 20MM
147498	1	HEX NIPPLE 1/4"-1/4" 1.2mm
147566	1	TEE M18X1.5 3/8"-1/4"
210728	1	BEARING F.LINK HEAD M17
230311	1	QUICK COUPLING 1/2"
232060	1	HY.ELBOW 1/4" BSP SWIVEL
232175	1	TEE 1/4"M X 1/4"F X 1/4"M BSP
241356	1	DOWTYSEAL 1/2"
241404	1	DOWTY SEAL 1/4"
242288	1	SEAL F. HYD ACCUMULATOR TWIN
283699	1	GREASE NIPPLE M6X1
284265	1	PLUG BREATHER 1/4" F/CYLINDER
284919	1	HYD. ACCUMULATOR F. CM875/1200
285727	1	PARTS KIT F.FLOW DIVIDER
334206	1	DUST HOOD FOR HY-COUPLING
410185	1	BOLT HEX 8.8 DEL M6X16
420847	1	BOLT HEX 8.8 DEL M8X85
460143	1	LOCK NUT M8 SST A2 DIN985
460261	1	NUT HEX M6X1.00 LOCK DIN985 A2 SS
461198	1	NUT HEX M16X2 JAMB
730638	1	HY.FLOW DIVIDER
731941	1	HYD. BLOCK MANIFOLD
782096	1	MANIFOLD BLOCK ASSEMBLY
784000	1	HOSE HY X 1/4 X 118.00"STR+ELB
784005	1	HOSE HY X 1/4 X 037.38"STR+ELB
784010	1	HOSE HY X 1/4 X 149.5"STR+ELB
784023	1	HOSE HY 1/4 X 43.25" STR.+ELB.
784031	1	HYD.HOSE CM TF 1/4"x550MM
784036	1	HOSE HY X 1/4 X 332.68"STR+ELB
784062	1	HOSE HY X 1/4 X 098.50"ELB+ELB
784094	1	HOSE HY X 1/4 X 248.0" ELB+ELB
784127	1	HOSE HY X 1/4 X 285.5" ELB+ELB
784128	1	HOSE HY X 1/4 X 259.85"STR+ELB
784129	1	HOSE HY X 1/4 X 299.21"STR+ELB
14010400	1	PLUG 1/4" BSP
14082300	1	LINK EYE Ø20/M24X2 L=87.5
21091800	1	LINK HEAD Ø25,M24X55 W/ GREASE NIP. DELTA
21091900	1	LINK HEAD M16 x D17 DELTA
23234500	1	HEX NIPPLE 1/4" - 9/16"
28117300	1	SEAL KIT 78120600/07/43
28376503	1	HOSE HY X1/4X047.25"STR+ELB
75074300	1	SEALKIT78122000/23-25/30-32/46
75074800	1	SEAL KIT 78123400/42
		SEAL KIT FOR 78100203 CYLINDER
75075200	1	SEAL KIT 78120900/14/50
78100203	1	CYL. D25/12-50/72531000 W/BSP ADAPT
78120700	1	SIN.CYL.Ø60/25-725 2XØ25 LEFT
78121400	1	DOUBLE CYLINDER D 50/30-300
78122400	1	DOUBLE CYLINDER D 40/20-300
78125600	1	SIN.CYL.Ø60/25_725_2XØ25 RIGHT
78128800	1	CYLINDER, D50/30-500
78219600	1	FLOW DIVIDER FTZ '13
78563000	1	HY.HO.3/8"L= 6150
		STR-STR

HYD FORCE 100'-120'
C0430-HIN, 08:10:18

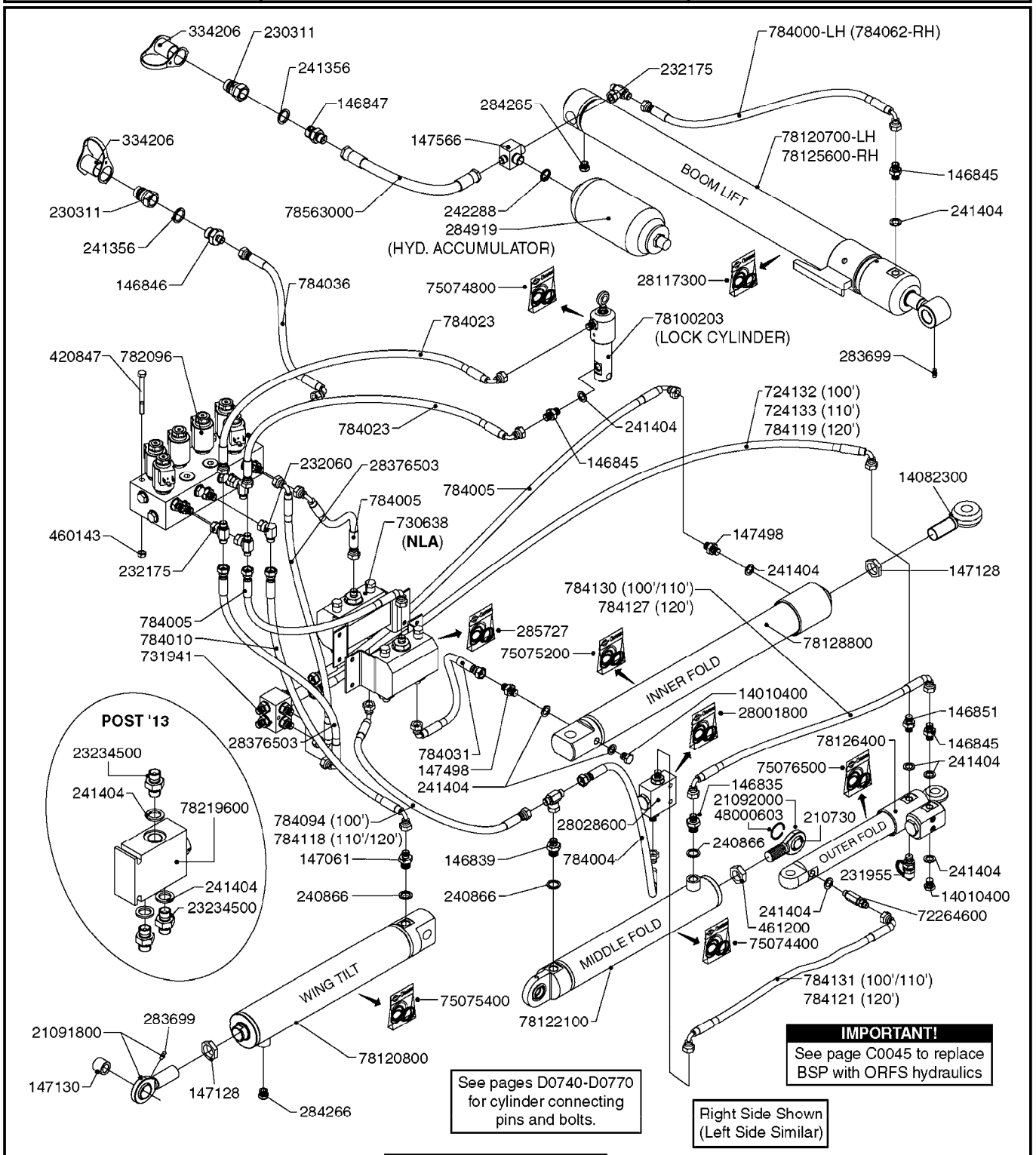

IMPORTANT!
See page C0045 to replace BSP with ORFS hydraulics

See pages D0740-D0770 for cylinder connecting pins and bolts.

Right Side Shown (Left Side Similar)

See Page C0340 for a breakdown of HZ electric components.

Check cylinder barrel for stamped part number.

"FA" plus date & part number stamped on FAROIL cylinders. (See page C0030)

For non-FAROIL cylinder parts, see page C0020.

C0430

Agroparts: www.HARDI-INTERNATIONAL.com

HYD FORCE 100'-120'
C0430-HIN, 08:10:18

Date 12.08.2020 11:36

parts-n°	order qty	description
146835	1	HEX NIPPLE 1/4" - 3/8" BSP
146839	1	HEX NIPPLE 1/4"X3/8" BSP 0.7MM
146845	1	HEX NIPPLE 1/4"X1/4"
146846	1	HEX NIPPLE 1/2" X 1/4"
146847	1	HEX NIPPLE 1/2"X3/8"
146851	1	HEX NIPPLE 1/4"x1/4" 0.7MM
147061	1	HEX NIPPLE 1/4"X3/8"/1.8
147128	1	NUT M24X2 NV-32
147130	1	BUSHING D25/20 20MM
147498	1	HEX NIPPLE 1/4"-1/4" 1.2mm
147566	1	TEE M18X1.5 3/8"-1/4"
210730	1	BEARING F.LINK HEAD M20
230311	1	QUICK COUPLING 1/2"
231955	1	NIPPLE F. PRESS GAUGE 1/4" BSP
232060	1	HY.ELBOW 1/4" BSP SWIVEL
232175	1	TEE 1/4"M X 1/4"F X 1/4"M BSP
240866	1	DOWTYSEAL 3/8"
241356	1	DOWTYSEAL 1/2"
241404	1	DOWTY SEAL 1/4"
242288	1	SEAL F. HYD ACCUMULATOR TWIN
283699	1	GREASE NIPPLE M6X1
284265	1	PLUG BREATHER 1/4" F/CYLINDER
284266	1	PLUG BREATHER 3/8" F/CYLINDER
284919	1	HYD. ACCUMULATOR F. CM875/1200
285727	1	PARTS KIT F.FLOW DIVIDER
334206	1	DUST HOOD FOR HY-COUPLING
420847	1	BOLT HEX 8.8 DEL M8X85
460143	1	LOCK NUT M8 SST A2 DIN985
461200	1	NUT HEX M20X1.5 JAMB.
724132	1	HOSE HY X 1/4 STR+ELB
724133	1	HOSE HY X 1/4 STR+ELB
730638	1	HY.FLOW DIVIDER
731941	1	HYD. BLOCK MANIFOLD
782096	1	MANIFOLD BLOCK ASSEMBLY
784000	1	HOSE HY X 1/4 X 118.00"STR+ELB
784004	1	HOSE HY 1/4" x 33.5" STR & ELB
784005	1	HOSE HY X 1/4 X 037.38"STR+ELB
784010	1	HOSE HY X 1/4 X 149.5"STR+ELB
784023	1	HOSE HY 1/4 X 43.25" STR.+ELB.
784031	1	HYD.HOSE CM TF 1/4"x550MM
784036	1	HOSE HY X 1/4 X 332.68"STR+ELB
784062	1	HOSE HY X 1/4 X 098.50"ELB+ELB
784094	1	HOSE HY X 1/4 X 248.0" ELB+ELB
784118	1	HOSE HY X 1/4 X 285.4" ELB+STR
784119	1	HOSE HY X 1/4 X 557.0"STR+ELB
784121	1	HOSE HY X 1/4 X 252.0" ELB+ELB
784127	1	HOSE HY X 1/4 X 285.5" ELB+ELB
784130	1	HOSE HY X 1/4 X 236.25"ELB+ELB
784131	1	HOSE HY X 1/4 X 202.75"ELB+ELB
14010400	1	PLUG 1/4" BSP
14082300	1	LINK EYE Ø20/M24X2 L=87.5
21091800	1	LINK HEAD Ø25,M24X55 W/ GREASE NIP. DELTA
21092000	1	LINK HEAD M20 x D20 L=78 DELTA
23234500	1	HEX NIPPLE 1/4" - 9/16"
28001800	1	REPAIR KIT F.ENDSTOP 1/4"
28028600	1	END STOP 1/4"
28117300	1	SEAL KIT 78120600/07/43
28376503	1	HOSE HY X1/4X047.25"STR+ELB
48000603	1	SNAP RING, Ø36X1.5 F.210730
72264600	1	HYDRUALIC RESTICTOR, ADJUSTABL
75074400	1	SEAL KIT 78121800/21/44

parts-n°	order qty	description
75074800	1	SEAL KIT 78123400/42
		SEAL KIT FOR 78100203 CYLINDER
75075200	1	SEAL KIT 78120900/14/50
75075400	1	SEAL KIT 78120800
75076500	1	SEAL KIT 78126400
78100203	1	CYL. D25/12-50/72531000 W/BSP ADAPT
78120700	1	SIN.CYL.Ø60/25-725 2XØ25 LEFT
78120800	1	CYLINDER DOUBLE 60/30-300
78122100	1	CYLINDER DOUBLE D50/25-298
78125600	1	SIN.CYL.Ø60/25_725_2XØ25 RIGHT
78126400	1	CYLINDER DBLE D32/16-200 W.STP
78128800	1	CYLINDER, D50/30-500
78219600	1	FLOW DIVIDER FTZ '13
78563000	1	HY.HO.3/8"L= 6150
		STR-STR

HYD TWIN FORCE ELECTRICAL
C0440-HIN, 01:01:16

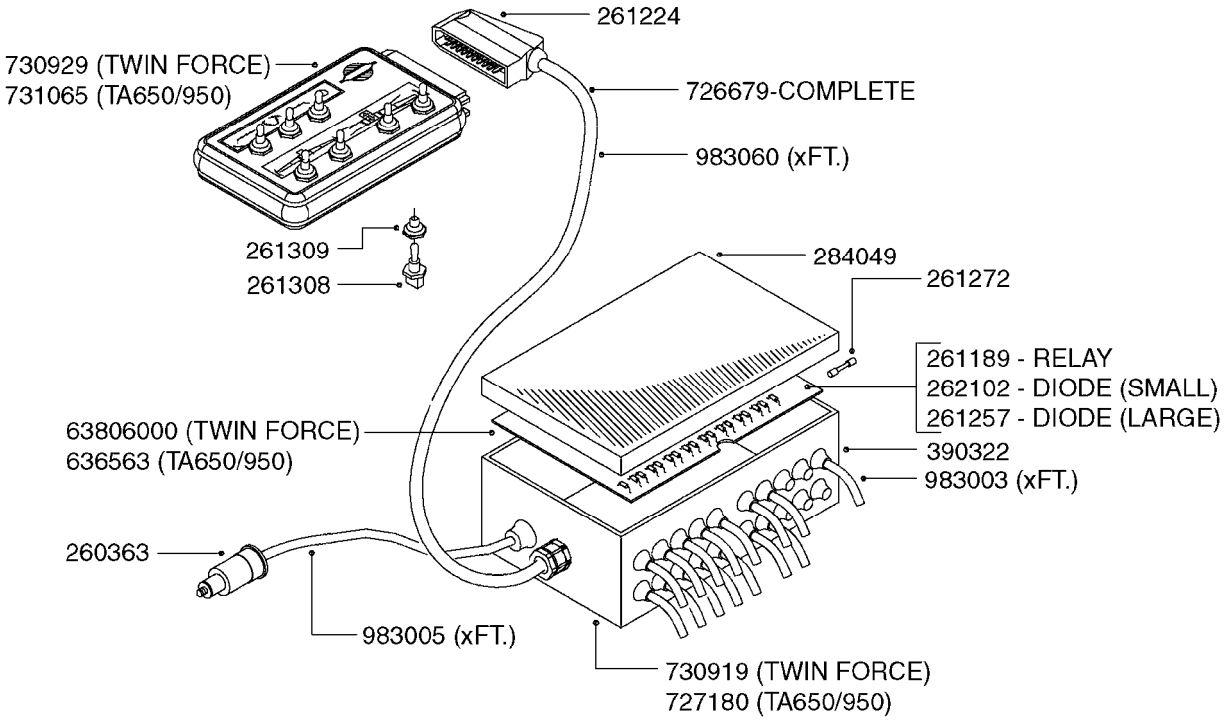

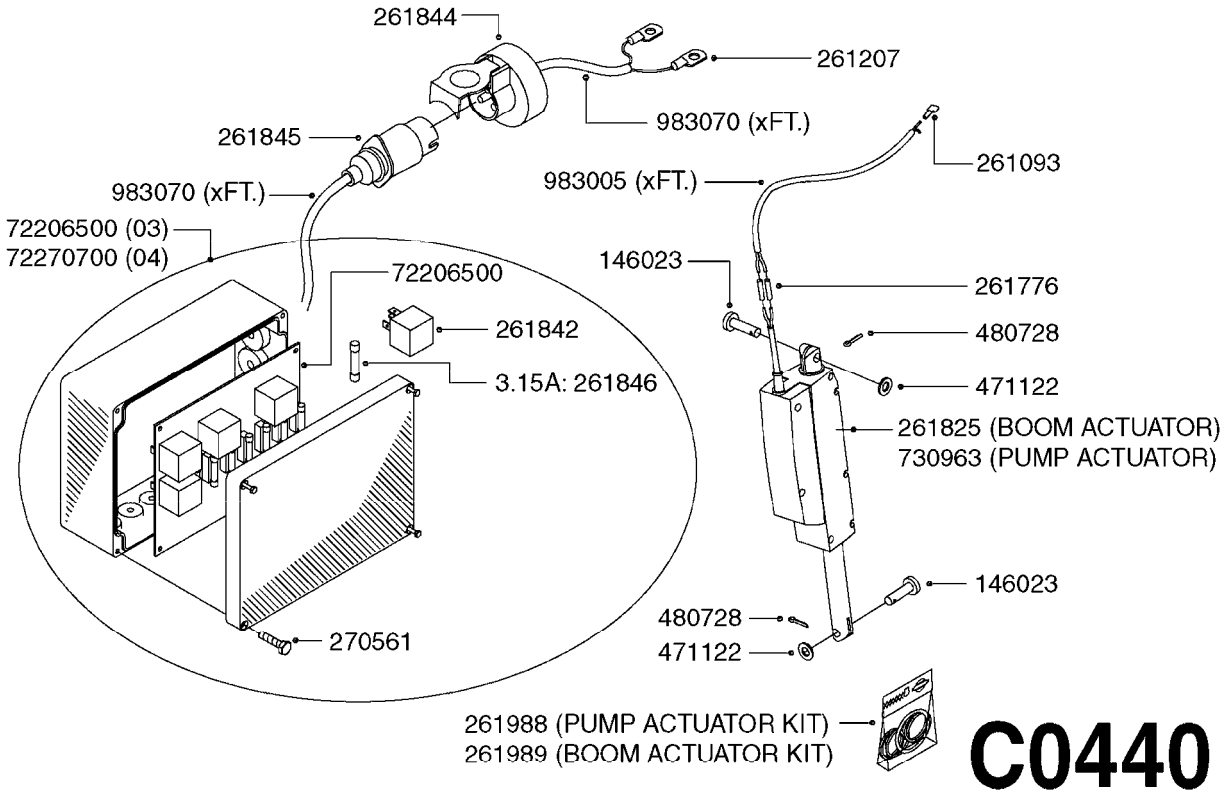

C0440

Agroparts: www.HARDI-INTERNATIONAL.com

HYD TWIN FORCE ELECTRICAL
C0440-HIN, 01:01:16

Date 12.08.2020 11:36

parts-n°	order qty	description
146023	1	PIN FOR COGWHEEL
260363	1	PLUG 2 POLE 12V
261093	1	SPADE F.ELEC.WIRE DK 2.8X0.8
261189	1	RELAY SUMI TYPE RCN 1V-5B
261207	1	ELECTRIC CONNECTOR 4MM
261224	1	PLUG HOUSING F/20 POLE MALE
261257	1	DIODE BY 255
261272	1	FUSE 10A D6X32 MM
261308	1	SWITCH APEM 5637
261309	1	SWITCH CAP
261776	1	ELECTRIC CONNECTOR 1.5MM
261825	1	ACTUATOR HAZ 2 WIRE
261842	1	RELAY HELLA 4RD.003.520-137
261844	1	PLUG ELEC.3POLE FEMALE F.CABLE
261845	1	PLUG ELEC.3 POLE MALE F.CABLE
261846	1	FUSE F 3.15A
261988	1	SPARE PARTS KIT/PUMP ACTUATOR
261989	1	SPARE PARTS KIT/BOOM ACTUATOR
262102	1	DIODE 600V/2A LT2A06
270561	1	SCREW W/SPRING ASSY. (QTY 1)
284049	1	COVER F.BOX 250X160X15
390322	1	DAH CONNECTION BOX
471122	1	WASHER, M10, Ø20/10.5X 2.0, SS
480728	1	PIN D3.2X20 SPLIT
636563	1	PRINT PLATE COMPLT F/DAH TWIN
726679	1	WIRE 18X0.5MM 12M 20 POL
727180	1	DAH CONNECTION BOX 5 TA650
730919	1	DAH CONNECTION BOX TWIN FORCE
730929	1	CONTROL BOX - DAH TWIN FORCE
730963	1	ACTUATOR F.PUMP TWIN FORCE
731065	1	CONTROL BOX 5 FUNCTION DAH
983003	1	CABLE ELEC.2X1MM WIRE BLACK EC
983005	1	ELEC. CABLE 2 WIRE X 1.5MM
983060	1	WIRE 20X0.34X2MM
983070	1	CABLE 2X6²
63806000	1	CIRCUIT BOARD F. DAH HAZ FORCE
72206500	1	CONNECTION BOX F.TWIN HAZ
72270700	1	HAY/Z ACTUATOR CONN BOX HURCS

HYD TWIN SOLENOID VALVE
C0450-HIN, 30:03:16

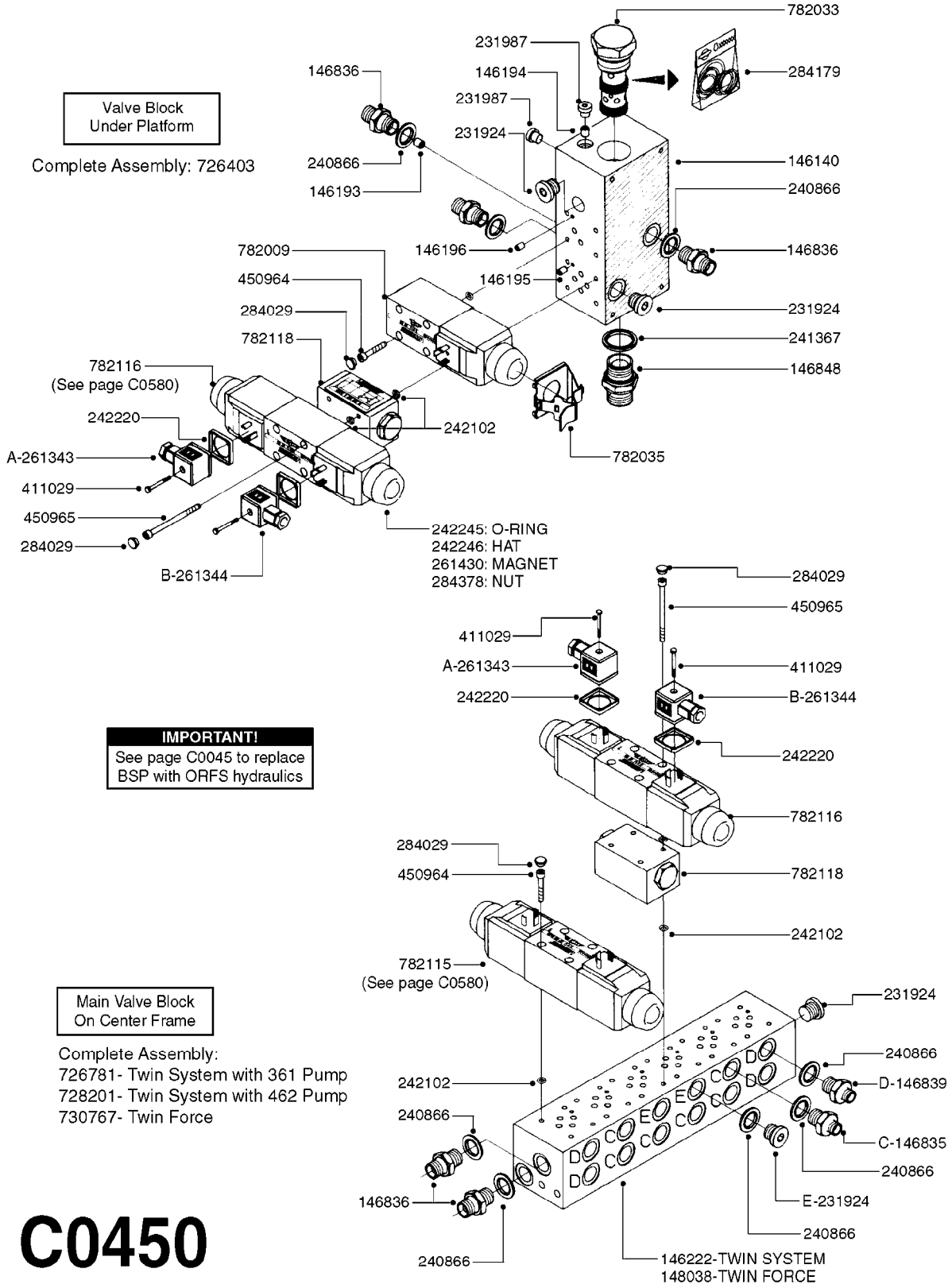

C0450

Agroparts: www.HARDI-INTERNATIONAL.com

HYD TWIN SOLENOID VALVE
C0450-HIN, 30:03:16

Date 12.08.2020 11:36

parts-n°	order qty	description
146140	1	MANIFOLD BLOCK
146193	1	NOZZLE D.2 M8X10
146194	1	NOZZLE D.8 M8X10
146195	1	NOZZLE D.2 M6X10
146196	1	NOZZLE D.8 M6X10
146222	1	MANIFOLD BLOCK
146835	1	HEX NIPPLE 1/4" - 3/8" BSP
146836	1	HEX NIPPLE 3/8"X3/8" BSP
146839	1	HEX NIPPLE 1/4"X3/8" BSP 0.7MM
146848	1	HEX. NIPPLE 3/4"BSP X 3/4"BSP
148038	1	MANIFOLD BLOCK F.HYD/6
231924	1	PLUG 3/8'
231987	1	PLUG 1/8' BSP W/GASKET
240866	1	DOWTYSEAL 3/8"
241367	1	DOWTYSEAL 28.5x22
242102	1	O-RING Ø9.25X1.78 NITRIL 90SH
242220	1	GASKET F. HIRSMANN PLUG
242245	1	O-RING F. VICKERS VLVE MAGNET
242246	1	BOOT F. VICKERS SOLENOID VALVE
261343	1	HIRSCHMANN PLUG 'A'
261344	1	HIRSCHMANN PLUG B
261430	1	MAGNET F.VICKERS SOLENOID NLA
284029	1	COVER PLUS D10.5/12.0X5.0
284179	1	GASKET SET F/CARTRIDGE VALVE
284378	1	NUT F. VICKERS SOLENOID VALVE
411029	1	SCREW M3X35 F.HIRSMANN PLUG
450964	1	SCREW M5X30 F.CYLINDER
450965	1	SCREW ROUND M5X70
726403	1	MANIFOLD BLOCK COUPLING
726781	1	MANIFOLD BLOCK TA-HAC/361
728201	1	MANIFOLD BLOCK TA-HAC/462
730767	1	HY.BLOCK COMPLETE TF HAZ
782009	1	MAGNET.VALVE DG4V-3-OB-A-MUG7-
782033	1	CART.VALVE C16-210 FLOW+RELIEF
782035	1	LOCK FOR HY VALVE
782115	1	HY SOLENOID VALVE DH HYD
782116	1	HY SOLENOID VALVE MD1L-S3/10N-D12K1/P
782118	1	LOCK VALVE MVPP-D

DAH VALVES (COMATROL) '9
C0460-HIN, 01:01:16

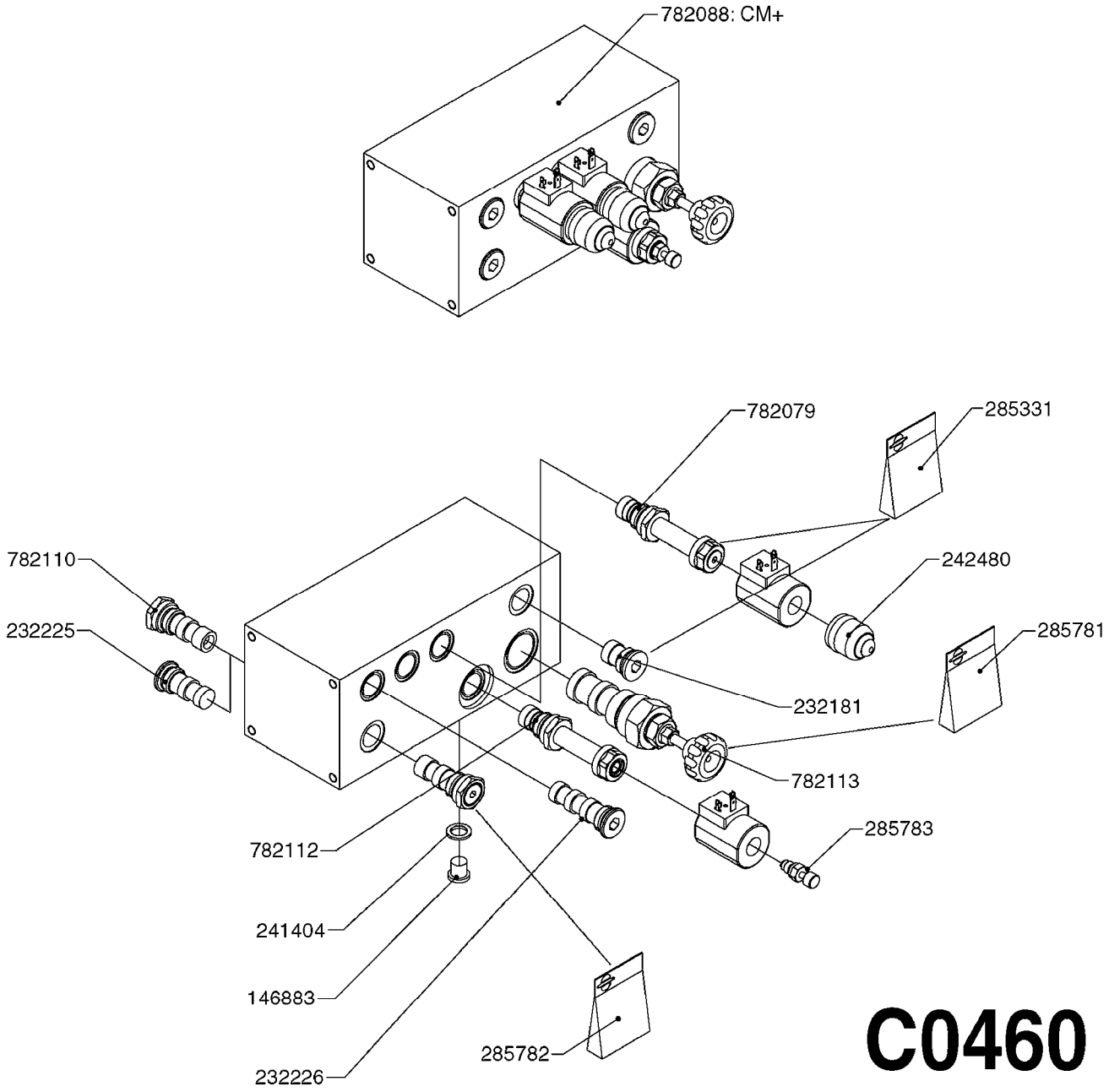

C0460

Agroparts: www.HARDI-INTERNATIONAL.com

DAH VALVES (COMATROL) '9
C0460-HIN, 01:01:16

Date 12.08.2020 11:36

parts-n°	order qty	description
146883	1	PLUG 1/4"RG NV=17 L=15 SS
232181	1	PLUG F DH HYD. VALVE
232225	1	PLUG NCS 06/3
232226	1	PLUG NCS 06/4
241404	1	DOWTY SEAL 1/4"
242480	1	DUST COVER F. HYD. VALVE
285331	1	SEAL KIT F. HZ HYD.SOLENOID 96
285781	1	SEAL KIT F.NCS 12/3
285782	1	SEAL KIT F.NCS 06/4
285783	1	BRASS VALVE F.EVH 06
782079	1	CARTRIDGE VALVE
782088	1	HY BLOCK CM+ TWIN
782110	1	NON RETURN VALVE F. STEERTRACK
782112	1	HY SOLENOID VALVE/MAG 12VDC
782113	1	FLOW REGULATOR VALVE

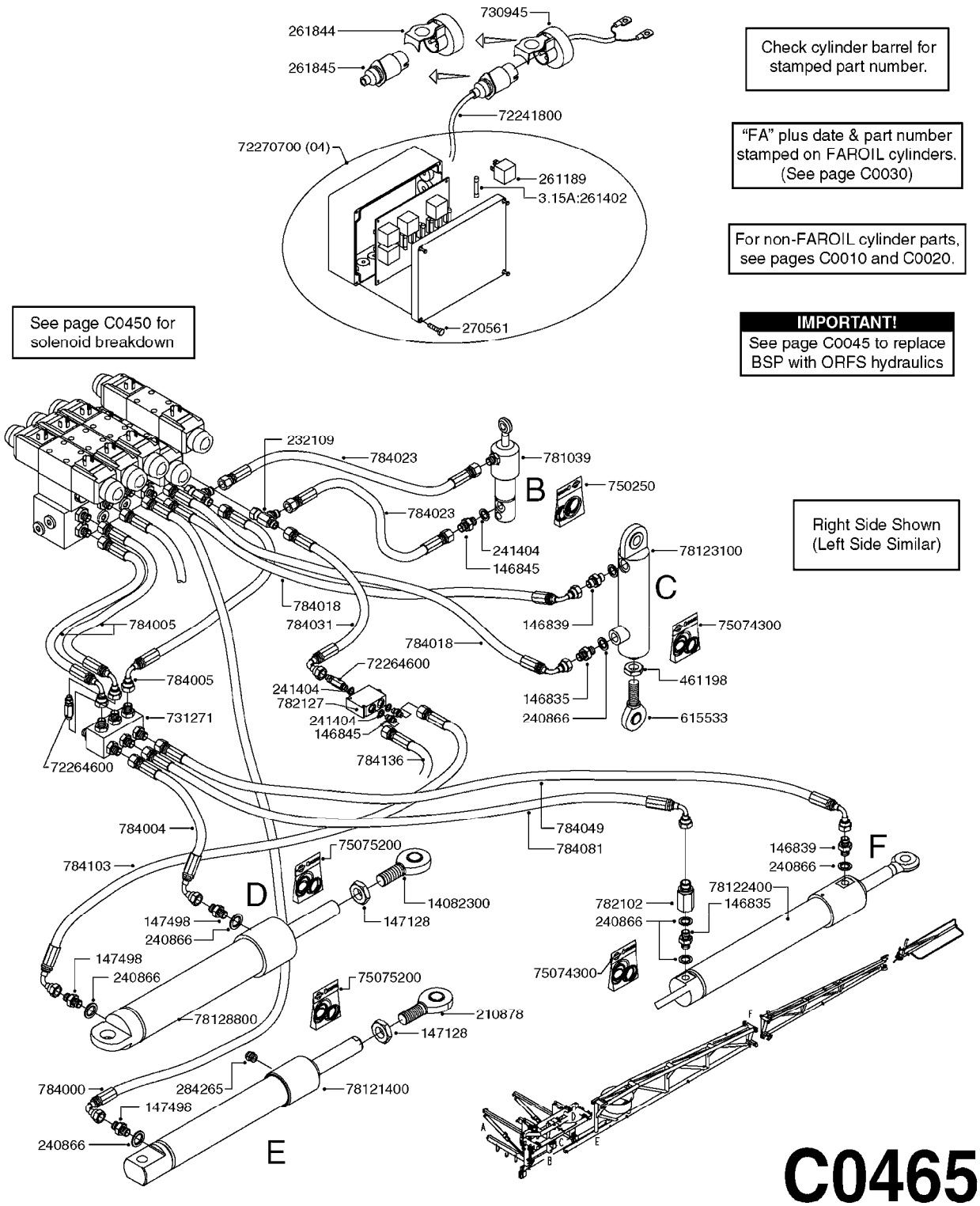

Check cylinder barrel for stamped part number.

"FA" plus date & part number stamped on FAROIL cylinders. (See page C0030)

For non-FAROIL cylinder parts, see pages C0010 and C0020.

See page C0450 for solenoid breakdown

IMPORTANT!
See page C0045 to replace BSP with ORFS hydraulics

Right Side Shown
(Left Side Similar)

C0465

Agroparts: www.HARDI-INTERNATIONAL.com

HYD TWIN FORCE 60'-66' HAZ
C0465-HIN, 30:11:17

Date 12.08.2020 11:36

parts-n°	order qty	description
146835	1	HEX NIPPLE 1/4" - 3/8" BSP
146839	1	HEX NIPPLE 1/4"X3/8" BSP 0.7MM
146845	1	HEX NIPPLE 1/4"X1/4"
147128	1	NUT M24X2 NV-32
147498	1	HEX NIPPLE 1/4"-1/4" 1.2mm
210878	1	LINK HEAD M24 x 55 W/ GREASE NIP. DELTA
232109	1	FITT.HY TEE 1/4"BSP UNION
240866	1	DOWTYSEAL 3/8"
241404	1	DOWTY SEAL 1/4"
261189	1	RELAY SUMI TYPE RCN 1V-5B
261402	1	FUSE 3.15A SLOW BURN
261844	1	PLUG ELEC.3POLE FEMALE F.CABLE
261845	1	PLUG ELEC.3 POLE MALE F.CABLE
270561	1	SCREW W/SPRING ASSY. (QTY 1)
284265	1	PLUG BREATHER 1/4" F/CYLINDER
461198	1	NUT HEX M16X2 JAMB
615533	1	LINK HEAD
730945	1	CABLE 2X4MM W.PLUG L=5000
731271	1	HY.BLOCK
750250	1	SEAL KIT F.HY CYL.781039
781039	1	CYL D25/12-50 172MM alt 781139
782102	1	HYD RESTRICTOR TWIN FORCE
782127	1	HY.FLOW DIVIDER FTZ-03
784000	1	HOSE HY X 1/4 X 118.00"STR+ELB
784004	1	HOSE HY 1/4" x 33.5" STR & ELB
784005	1	HOSE HY X 1/4 X 037.38"STR+ELB
784018	1	HOSE HY X 1/4 X 029.5"STR+ELB
784023	1	HOSE HY 1/4 X 43.25" STR.+ELB.
784031	1	HYD.HOSE CM TF 1/4"x550MM
784049	1	HOSE HY X 1/4" X 240"STR+ELB
784081	1	HOSE HY X 1/4 X 281.50"STR+ELB
784103	1	HYDRAULIC HOSE 1/4'X770
784136	1	HOSE HY X 1/4 X 33.5" ELB+ELB
14082300	1	LINK EYE Ø20/M24X2 L=87.5
72241800	1	POWER CABLE 4MM2 L=10M
72264600	1	HYDRUALIC RESTICTOR, ADJUSTABL
72270700	1	HAY/Z ACTUATOR CONN BOX HURCS
75074300	1	SEALKIT78122000/23-25/30-32/46
75075200	1	SEAL KIT 78120900/14/50
78121400	1	DOUBLE CYLINDER D 50/30-300
78122400	1	DOUBLE CYLINDER D 40/20-300
78123100	1	CYLINDER DOUBLE D40/20-120
78128800	1	CYLINDER, D50/30-500

HYD TWIN FORCE 80'-90' HAZ
C0470-HIN, 17:11:17

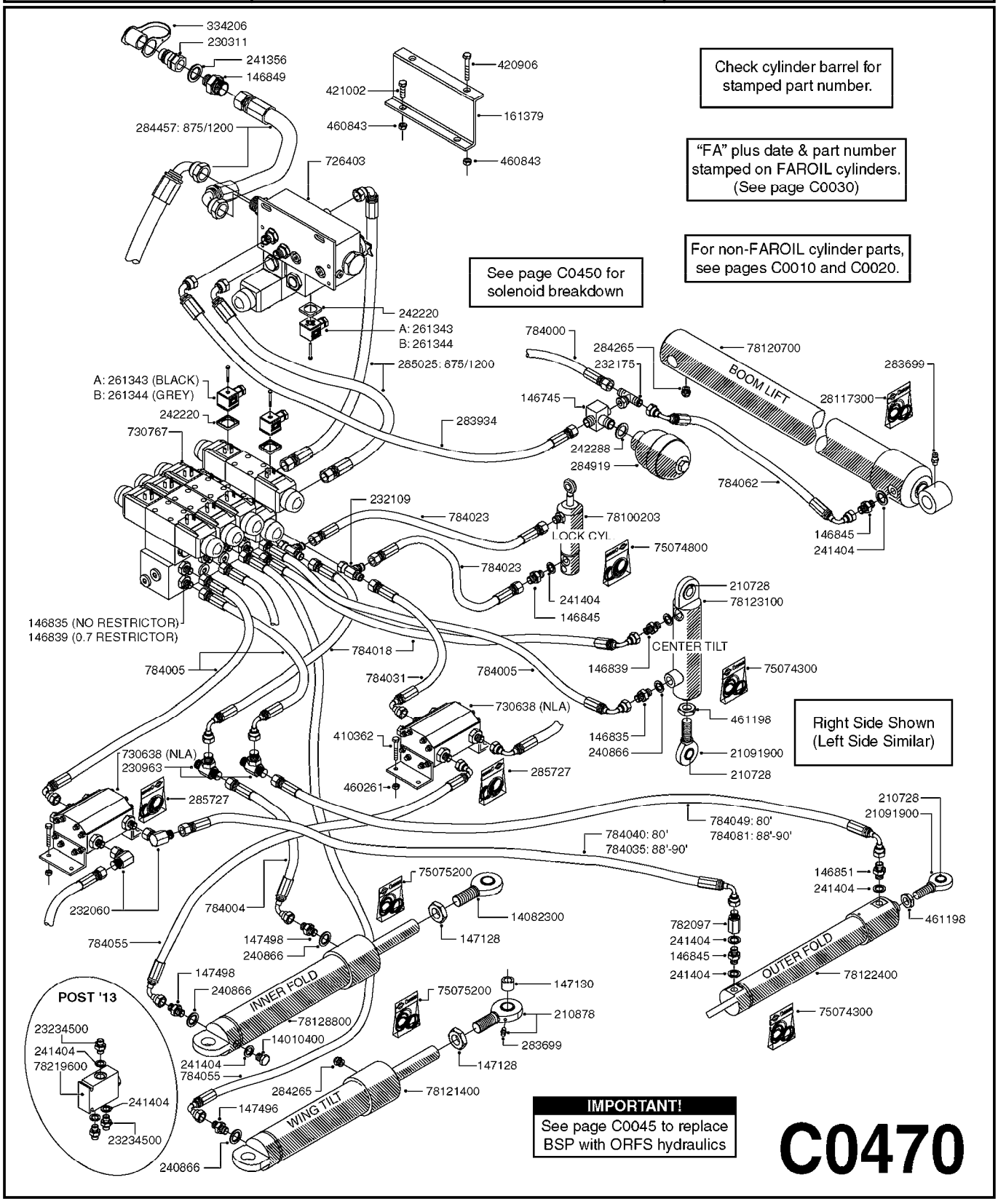

C0470

Agroparts: www.HARDI-INTERNATIONAL.com

HYD TWIN FORCE 80'-90' HAZ
C0470-HIN, 17:11:17

Date 12.08.2020 11:36

parts-n°	order qty	description
146745	1	TEE BLOCK M18X1.5-3/8"X1/4"
146835	1	HEX NIPPLE 1/4" - 3/8" BSP
146839	1	HEX NIPPLE 1/4"X3/8" BSP 0.7MM
146845	1	HEX NIPPLE 1/4"X1/4"
146849	1	HEX. NIPPLE 3/4"BSP X 1/2"BSP
146851	1	HEX NIPPLE 1/4"x1/4" 0.7MM
147128	1	NUT M24X2 NV-32
147130	1	BUSHING D25/20 20MM
147496	1	AIR SLOT RAIL L=1230/D25 LEFT
147498	1	HEX NIPPLE 1/4"-1/4" 1.2mm
161379	1	MOUNT PLATE F.MANIFOLD BLOCK
210728	1	BEARING F.LINK HEAD M17
210878	1	LINK HEAD M24 x 55 W/ GREASE NIP. DELTA
230311	1	QUICK COUPLING 1/2"
230963	1	TEE 1/4"M X 1/4"M X 1/4"M BSP
232060	1	HY.ELBOW 1/4" BSP SWIVEL
232109	1	FITT.HY TEE 1/4"BSP UNION
232175	1	TEE 1/4"M X 1/4"F X 1/4"M BSP
240866	1	DOWTYSEAL 3/8"
241356	1	DOWTYSEAL 1/2"
241404	1	DOWTY SEAL 1/4"
242220	1	GASKET F. HIRSMANN PLUG
242288	1	SEAL F. HYD ACCUMULATOR TWIN
261343	1	HIRSCHMANN PLUG 'A'
261344	1	HIRSCHMANN PLUG B
283699	1	GREASE NIPPLE M6X1
283934	1	HOSE HY. 3/8" l=3000
		OML-OML90
284265	1	PLUG BREATHER 1/4" F/CYLINDER
284457	1	HOSE HY X 3/4 x 3800
284919	1	HYD. ACCUMULATOR F. CM875/1200
285025	1	HOSE HY x 3/8 x 228.0" STR+ELB
285727	1	PARTS KIT F.FLOW DIVIDER
334206	1	DUST HOOD FOR HY-COUPLING
410362	1	BOLT HEX 8.8 SS M6X20
420906	1	BOLT HEX 8.8 DEL M10X60
421002	1	BOLT HEX 8.8 DEL M10X30 FT DIN933
460261	1	NUT HEX M6X1.00 LOCK DIN985 A2 SS
460843	1	NUT HEX M10
461198	1	NUT HEX M16X2 JAMB
726403	1	MANIFOLD BLOCK COUPLING
730638	1	HY.FLOW DIVIDER
730767	1	HY.BLOCK COMPLETE TF HAZ
782097	1	HEX NIPPLE 1/4" ONE-WAY 0.55MM
784000	1	HOSE HY X 1/4 X 118.00"STR+ELB
784004	1	HOSE HY 1/4" x 33.5" STR & ELB
784005	1	HOSE HY X 1/4 X 037.38"STR+ELB
784018	1	HOSE HY X 1/4 X 029.5"STR+ELB
784023	1	HOSE HY 1/4 X 43.25" STR.+ELB.
784031	1	HYD.HOSE CM TF 1/4"x550MM
784035	1	HOSE HY X 1/4 X 268" STR+ELB
784040	1	HYD.HOSE CM TF 60'-66'-80'
784049	1	HOSE HY X 1/4" X 240"STR+ELB
784055	1	HYD.HOSE CM TF
784062	1	HOSE HY X 1/4 X 098.50"ELB+ELB
784081	1	HOSE HY X 1/4 X 281.50"STR+ELB
14010400	1	PLUG 1/4" BSP
14082300	1	LINK EYE Ø20/M24X2 L=87.5
21091900	1	LINK HEAD M16 x D17 DELTA
23234500	1	HEX NIPPLE 1/4" - 9/16"
28117300	1	SEAL KIT 78120600/07/43

HYD TWIN FORCE 80'-90' HAZ
C0470-HIN, 17:11:17

Date 12.08.2020 11:36

parts-n°	order qty	description
75074300	1	SEALKIT78122000/23-25/30-32/46
75074800	1	SEAL KIT 78123400/42
		SEAL KIT FOR 78100203 CYLINDER
75075200	1	SEAL KIT 78120900/14/50
78100203	1	CYL. D25/12-50/72531000 W/BSP ADAPT
78120700	1	SIN.CYL.Ø60/25-725 2XØ25 LEFT
78121400	1	DOUBLE CYLINDER D 50/30-300
78122400	1	DOUBLE CYLINDER D 40/20-300
78123100	1	CYLINDER DOUBLE D40/20-120
78128800	1	CYLINDER, D50/30-500
78219600	1	FLOW DIVIDER FTZ '13

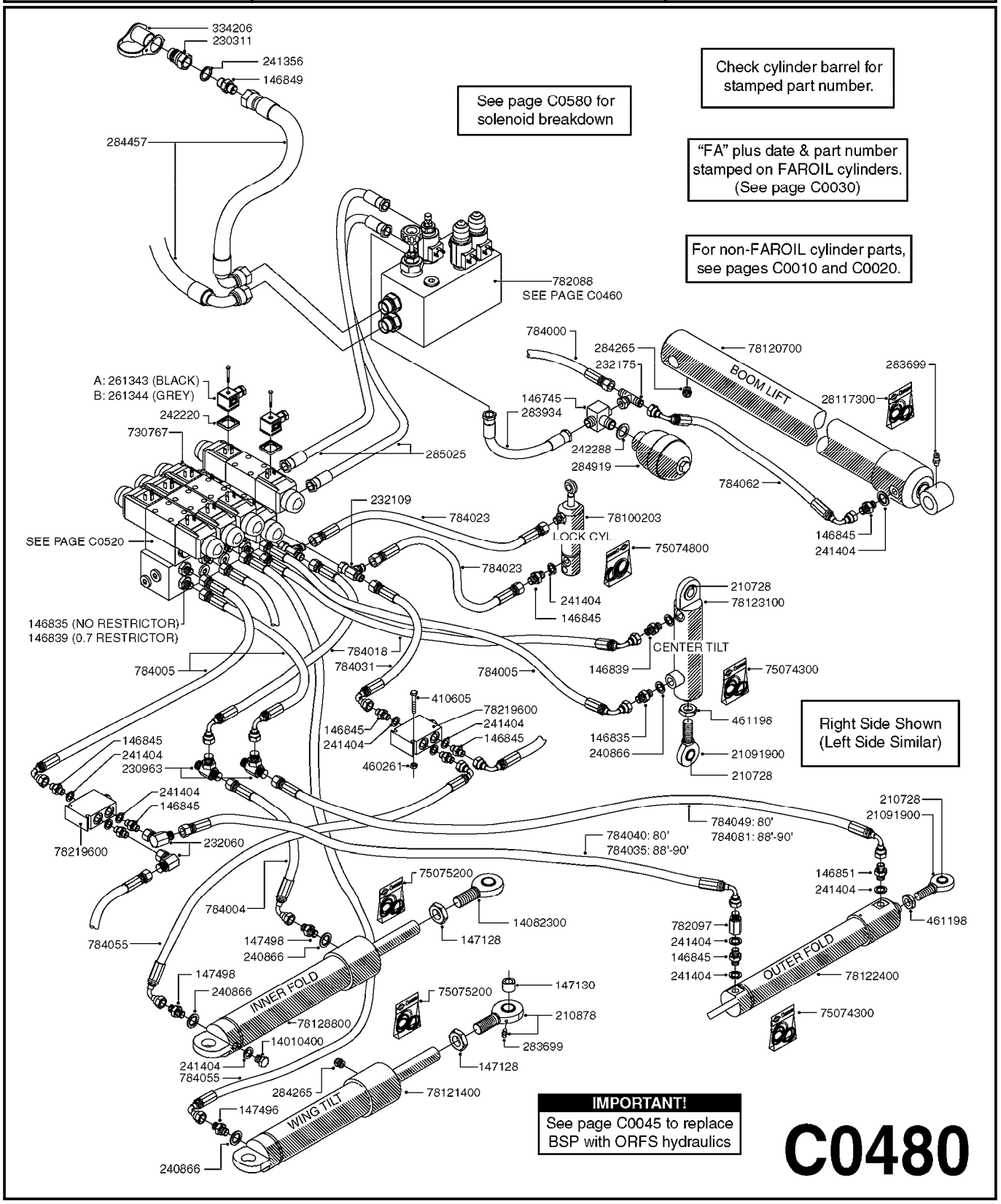
334206
230311
241356
146849
284457
See page C0580 for solenoid breakdown
Check cylinder barrel for stamped part number.
"FA" plus date & part number stamped on FAROIL cylinders. (See page C0030)
For non-FAROIL cylinder parts, see pages C0010 and C0020.
782088
SEE PAGE C0460
784000
284265
232175
78120700
BOOM LIFT
283699
28117300
146745
283934
242288
284919
784062
146845
241404
A: 261343 (BLACK)
B: 261344 (GREY)
242220
730767
285025
232109
784023
78100203
LOCK CYL.
75074800
SEE PAGE C0520
784023
241404
146845
210728
78123100
146835 (NO RESTRICTOR)
146839 (0.7 RESTRICTOR)
CENTER TILT
784018
784031
784005
784005
146839
75074300
410605
78219600
241404
146845
241404
146845
460261
461198
146835
240866
21091900
210728
Right Side Shown (Left Side Similar)
146845
241404
230963
241404
146845
78219600
232060
210728
21091900
784049: 80'
784081: 88'-90'
784040: 80'
784035: 88'-90'
146851
241404
461198
75075200
784004
14082300
147498
240866
147128
782097
241404
146845
241404
OUTER FOLD
78122400
784055
147498
240866
INNER FOLD
78128800
14010400
75075200
147130
210878
283699
147128
75074300
241404
784055
284265
78121400
WING TILT
147496
240866
IMPORTANT!
See page C0045 to replace BSP with ORFS hydraulics

C0480

Agroparts: www.HARDI-INTERNATIONAL.com

HYD TWIN FORCE CM+ 80'-90' HAZ
C0480-HIN, 17:11:17

Date 12.08.2020 11:36

parts-n°	order qty	description
146745	1	TEE BLOCK M18X1.5-3/8"X1/4"
146835	1	HEX NIPPLE 1/4" - 3/8" BSP
146839	1	HEX NIPPLE 1/4"X3/8" BSP 0.7MM
146845	1	HEX NIPPLE 1/4"X1/4"
146849	1	HEX. NIPPLE 3/4"BSP X 1/2"BSP
146851	1	HEX NIPPLE 1/4"x1/4" 0.7MM
147128	1	NUT M24X2 NV-32
147130	1	BUSHING D25/20 20MM
147496	1	AIR SLOT RAIL L=1230/D25 LEFT
147498	1	HEX NIPPLE 1/4"-1/4" 1.2mm
210728	1	BEARING F.LINK HEAD M17
210878	1	LINK HEAD M24 x 55 W/ GREASE NIP. DELTA
230311	1	QUICK COUPLING 1/2"
230963	1	TEE 1/4"M X 1/4"M X 1/4"M BSP
232060	1	HY.ELBOW 1/4" BSP SWIVEL
232109	1	FITT.HY TEE 1/4"BSP UNION
232175	1	TEE 1/4"M X 1/4"F X 1/4"M BSP
240866	1	DOWTYSEAL 3/8"
241356	1	DOWTYSEAL 1/2"
241404	1	DOWTY SEAL 1/4"
242220	1	GASKET F. HIRSMANN PLUG
242288	1	SEAL F. HYD ACCUMULATOR TWIN
261343	1	HIRSCHMANN PLUG 'A'
261344	1	HIRSCHMANN PLUG B
283699	1	GREASE NIPPLE M6X1
283934	1	HOSE HY. 3/8" l=3000
		OML-OML90
284265	1	PLUG BREATHER 1/4" F/CYLINDER
284457	1	HOSE HY X 3/4 x 3800
284919	1	HYD. ACCUMULATOR F. CM875/1200
285025	1	HOSE HY x 3/8 x 228.0" STR+ELB
334206	1	DUST HOOD FOR HY-COUPLING
410605	1	BOLT HEX 8.8 DEL M6X80
460261	1	NUT HEX M6X1.00 LOCK DIN985 A2 SS
461198	1	NUT HEX M16X2 JAMB
730767	1	HY.BLOCK COMPLETE TF HAZ
782088	1	HY BLOCK CM+ TWIN
782097	1	HEX NIPPLE 1/4" ONE-WAY 0.55MM
784000	1	HOSE HY X 1/4 X 118.00"STR+ELB
784004	1	HOSE HY 1/4" x 33.5" STR & ELB
784005	1	HOSE HY X 1/4 X 037.38"STR+ELB
784018	1	HOSE HY X 1/4 X 029.5"STR+ELB
784023	1	HOSE HY 1/4 X 43.25" STR.+ELB.
784031	1	HYD.HOSE CM TF 1/4"x550MM
784035	1	HOSE HY X 1/4 X 268" STR+ELB
784040	1	HYD.HOSE CM TF 60'-66'-80'
784049	1	HOSE HY X 1/4" X 240"STR+ELB
784055	1	HYD.HOSE CM TF
784062	1	HOSE HY X 1/4 X 098.50"ELB+ELB
784081	1	HOSE HY X 1/4 X 281.50"STR+ELB
14010400	1	PLUG 1/4" BSP
14082300	1	LINK EYE Ø20/M24X2 L=87.5
21091900	1	LINK HEAD M16 x D17 DELTA
28117300	1	SEAL KIT 78120600/07/43
75074300	1	SEALKIT78122000/23-25/30-32/46
75074800	1	SEAL KIT 78123400/42
		SEAL KIT FOR 78100203 CYLINDER
75075200	1	SEAL KIT 78120900/14/50
78100203	1	CYL. D25/12-50/72531000 W/BSP ADAPT
78120700	1	SIN.CYL.Ø60/25-725 2XØ25 LEFT
78121400	1	DOUBLE CYLINDER D 50/30-300

parts-n°	order qty	description
78122400	1	DOUBLE CYLINDER D 40/20-300
78123100	1	CYLINDER DOUBLE D40/20-120
78128800	1	CYLINDER, D50/30-500
78219600	1	FLOW DIVIDER FTZ '13

HYD TWIN FORCE NCM 118' HAZ
C0490-HIN, 17:11:17

Page 0

Date 12.08.2020 11:36

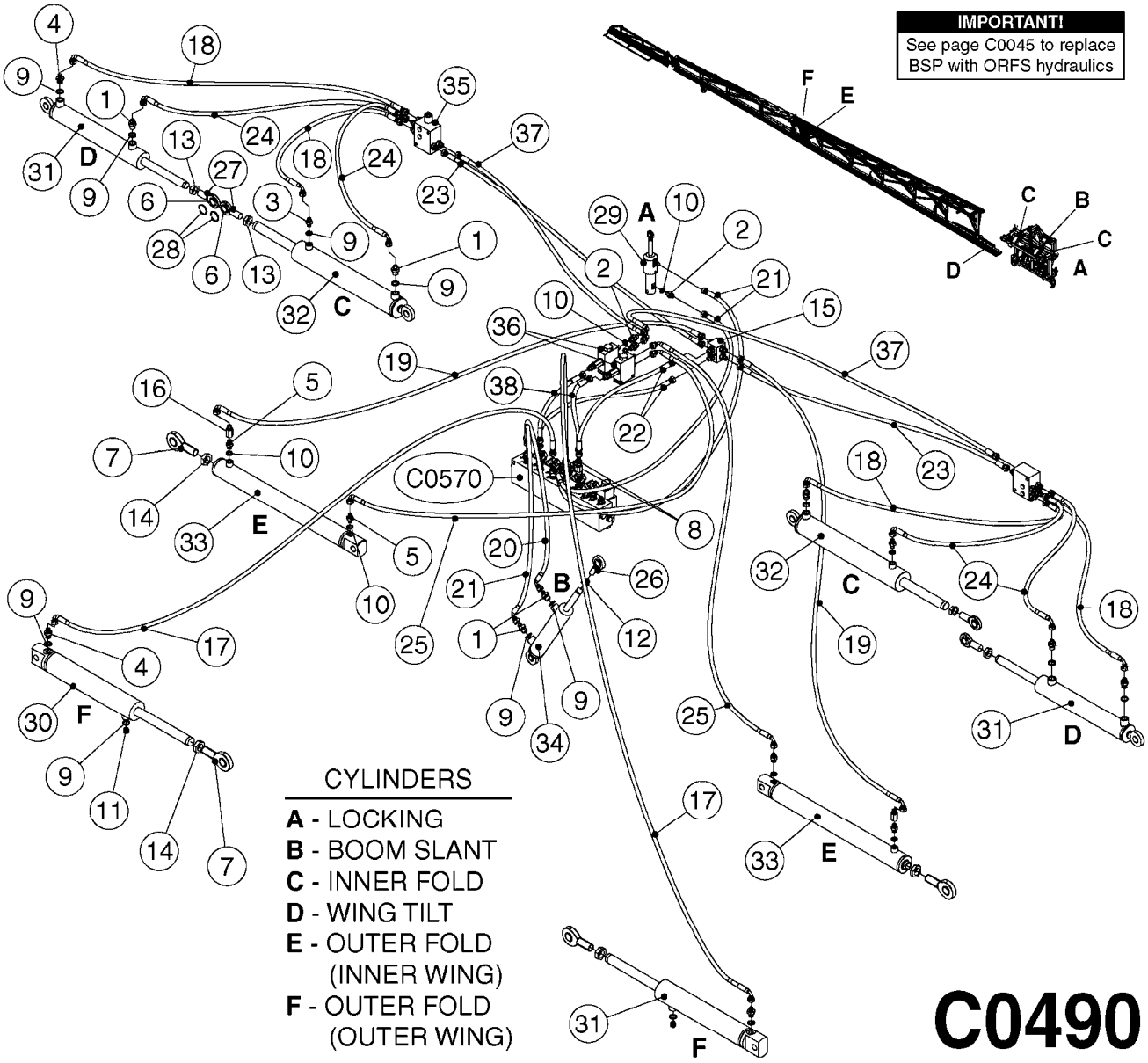

C0490

Agroparts: www.HARDI-INTERNATIONAL.com

HYD TWIN FORCE NCM 118' HAZ
C0490-HIN, 17:11:17

Date 12.08.2020 11:36

Pos.	parts-nº	order qty	description
1	146839	1	HEX NIPPLE 1/4"X3/8" BSP 0.7MM
2	146845	1	HEX NIPPLE 1/4"X1/4"
3	146851	1	HEX NIPPLE 1/4"x1/4" 0.7MM
4	147061	1	HEX NIPPLE 1/4"X3/8"/1.8
5	147498	1	HEX NIPPLE 1/4"-1/4" 1.2mm
6	210730	1	BEARING F.LINK HEAD M20
7	210878	1	LINK HEAD M24 x 55 W/ GREASE NIP. DELTA
8	232109	1	FITT.HY TEE 1/4"BSP UNION
9	240866	1	DOWTYSEAL 3/8"
10	241404	1	DOWTY SEAL 1/4"
11	284266	1	PLUG BREATHER 3/8" F/CYLINDER
12	461198	1	NUT HEX M16X2 JAMB
13	461200	1	NUT HEX M20X1.5 JAMB.
14	461236	1	NUT HEX M24X1.5
15	731941	1	HYD. BLOCK MANIFOLD
16	782097	1	HEX NIPPLE 1/4" ONE-WAY 0.55MM
17	784000	1	HOSE HY X 1/4 X 118.00"STR+ELB
18	784001	1	HOSE HY X 1/4 X 067.00"STR+ELB
19	784004	1	HOSE HY 1/4" x 33.5" STR & ELB
20	784005	1	HOSE HY X 1/4 X 037.38"STR+ELB
21	784023	1	HOSE HY 1/4 X 43.25" STR.+ELB.
22	784043	1	HOSE HY X 1/4 X 33.5" STR+STR
23	784061	1	HYD HOSE 1/4" L=9400 STR.+ELB
24	784110	1	HOSE HY X 1/4 X 18.9" STR+ELB
25	784136	1	HOSE HY X 1/4 X 33.5" ELB+ELB
26	21091900	1	LINK HEAD M16 x D17 DELTA
27	21092000	1	LINK HEAD M20 x D20 L=78 DELTA
28	48000603	1	SNAP RING, Ø36X1.5 F.210730
29	78100203	1	CYL. D25/12-50/72531000 W/BSP ADAPT
30	78120800	1	CYLINDER DOUBLE 60/30-300
31	78122100	1	CYLINDER DOUBLE D50/25-298
32	78124400	1	CYLINDER DOUBLE D50/25_250
33	78128800	1	CYLINDER, D50/30-500
34	78129900	1	CYLINDER DOUBLE D40/20 180 1/4
35	78215600	1	HYDR.BLOCK W.NONRETURN
36	78219600	1	FLOW DIVIDER FTZ '13
37	78416400	1	HOSE HY X 1/4 X 354.3" STR+STR
38	78417100	1	HOSE HY X 1/4 X 15.75" STR+STR

HYD TWIN FORCE FAN HAZ
C0500-HIN, 30:03:16

Date 12.08.2020 11:36

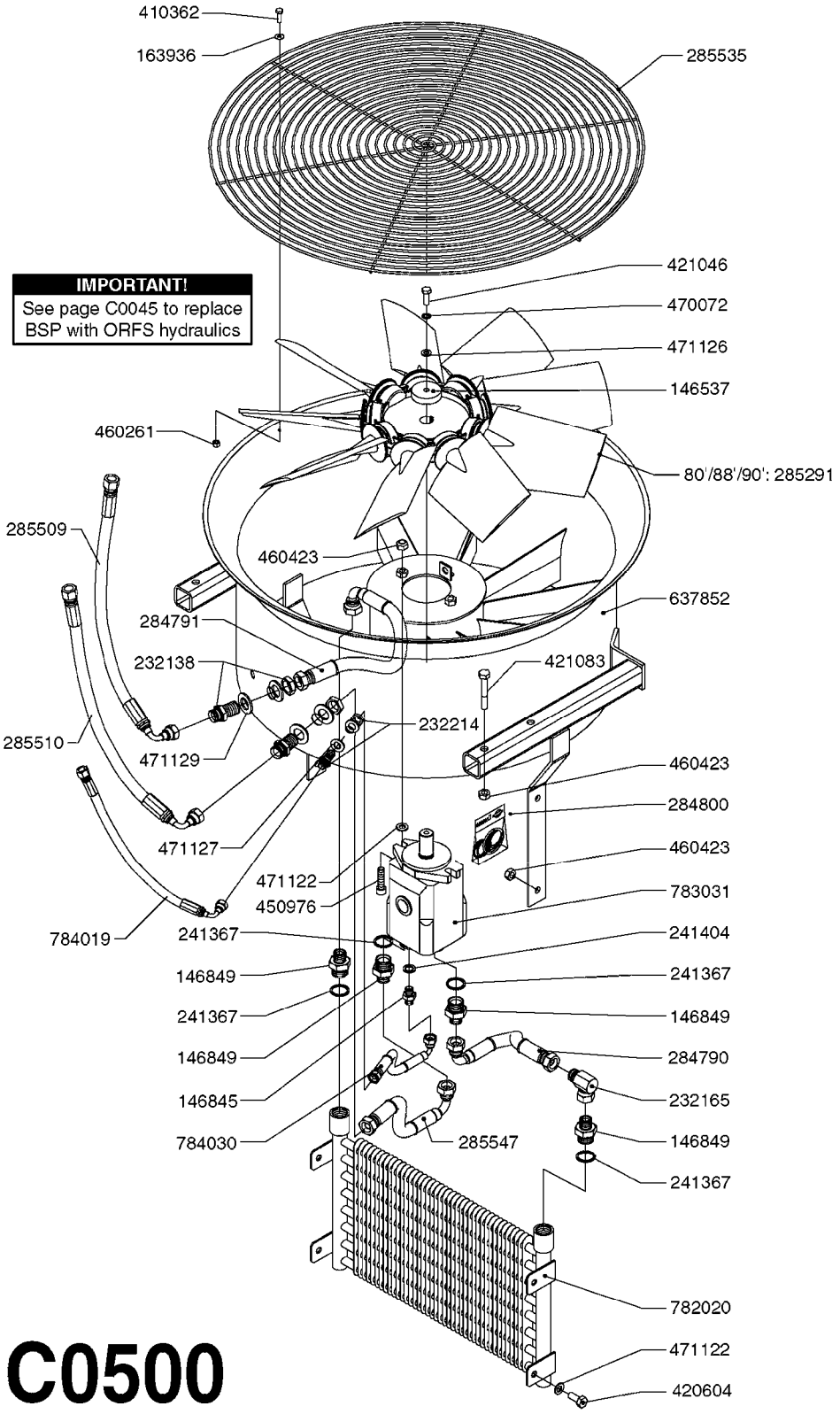

C0500

Agroparts: www.HARDI-INTERNATIONAL.com

HYD TWIN FORCE FAN HAZ
C0500-HIN, 30:03:16

Date 12.08.2020 11:36

parts-n°	order qty	description
146537	1	BUSHING D50/D40X12MM
146845	1	HEX NIPPLE 1/4"X1/4"
146849	1	HEX. NIPPLE 3/4"BSP X 1/2"BSP
163936	1	WASHER D15/D6.2X1
232138	1	HEX NIPPLE W/NUT 1/2"
232165	1	HY.ELBOW 1/2" BSP SWIVEL
232214	1	NIPPLE 1/4" W.U. NUT DEL
241367	1	DOWTYSEAL 28.5x22
241404	1	DOWTY SEAL 1/4"
284790	1	HOSE HY X 1/2 X 15.75"STR+ELB
284791	1	HOSE HY X 1/2 X 21.5"STR+ELB
284800	1	GASKET SET F.HYMOTOR M4MF11-28
285291	1	FAN BLADE F.TWIN FORCE 80'-90'
285509	1	HOSE HY X 1/2 X 78.75"STR+ELB
285510	1	HOSE HY X 1/2 X 82.5"STR+ELB
285535	1	GUARD FOR TWIN FORCE FAN HAZ
285547	1	HOSE HY X 1/2" X 15" STR+ELB
410362	1	BOLT HEX 8.8 SS M6X20
420604	1	BOLT HEX 8.8 DEL M10X25 FT DIN933
421046	1	BOLT HEX M8X25/25 A2 SS DIN933
421083	1	BOLT HEX 8.8 DEL M10X65
450976	1	BOLT M10X50 F.TWIN ARM YOKE
460261	1	NUT HEX M6X1.00 LOCK DIN985 A2 SS
460423	1	NUT HEX M10X1.50 LOCK DIN985A2 SS
470072	1	WASHER D15/D8X.5 LOCK
471122	1	WASHER, M10, Ø20/10.5X 2.0, SS
471126	1	WASHER, M8, Ø16/ 8.4X 1.6, SS
471127	1	WASHER, M12, Ø24/13X24X2.5 SS
471129	1	WASHER, M20, Ø37/21.0X 3.0, SS
637852	1	FAN HOUSING F.TWIN FORCE
782020	1	RADIATOR ELEMENT 2KW TYPE R6
783031	1	HYDRAULIC MOTOR FAN HAZ
784019	1	HOSE HY X 1/4 X 078.75"STR+ELB
784030	1	HOSE HY X 1/4" X 13.75"STR+ELB

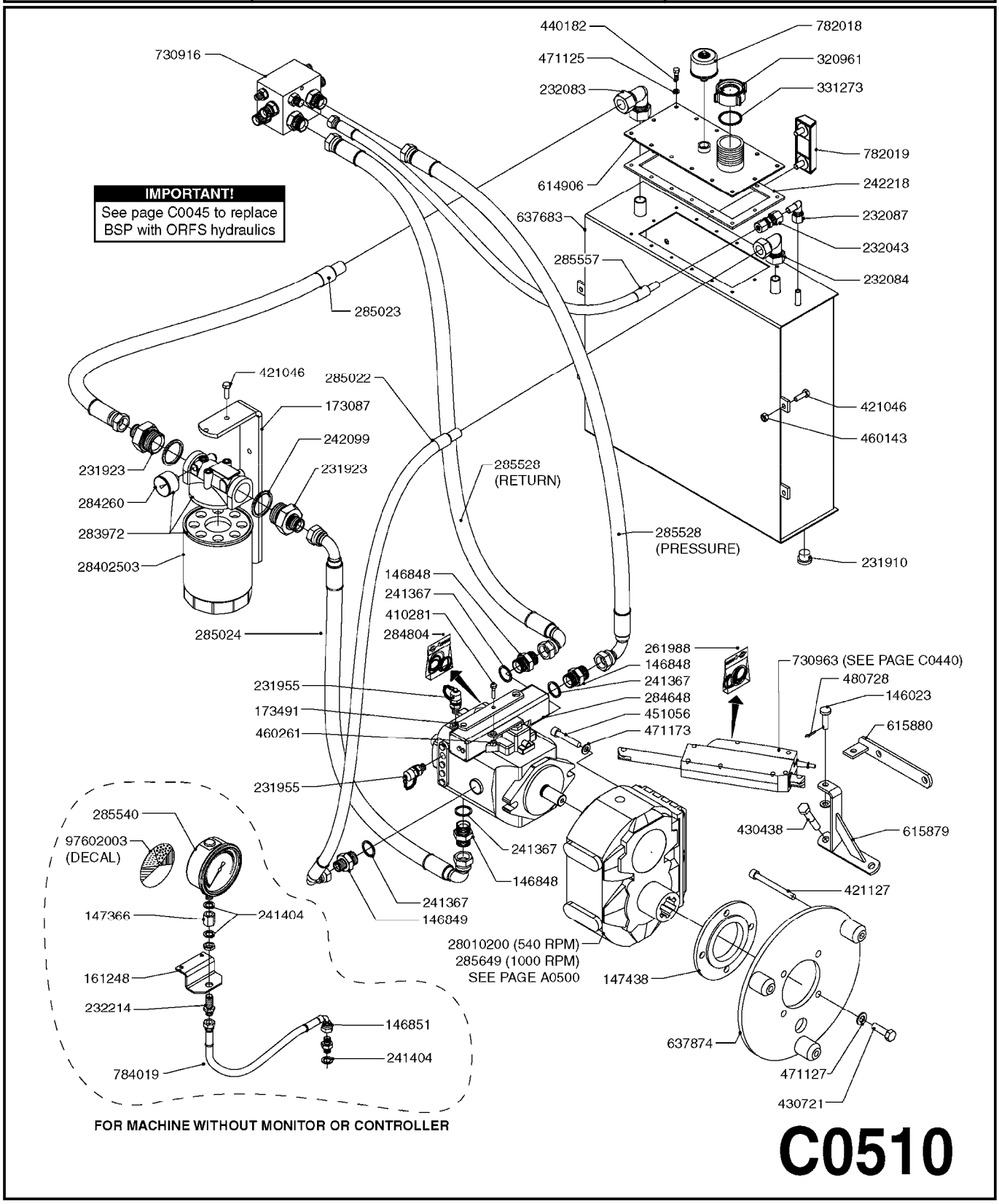
IMPORTANT!
See page C0045 to replace BSP with ORFS hydraulics
730916
440182
471125
232083
782018
320961
331273
782019
614906
242218
637683
232087
232043
285557
232084
285023
421046
285022
173087
242099
231923
231923
284260
283972
28402503
285528 (RETURN)
285528 (PRESSURE)
421046
460143
231910
146848
241367
410281
284804
285024
261988
146848
241367
284648
451056
471173
231955
173491
460261
231955
730963 (SEE PAGE C0440)
480728
146023
615880
430438
615879
241367
146848
241367
146849
421127
28010200 (540 RPM)
285649 (1000 RPM)
SEE PAGE A0500
147438
637874
471127
430721
285540
97602003 (DECAL)
147366
241404
161248
232214
146851
241404
784019
FOR MACHINE WITHOUT MONITOR OR CONTROLLER

C0510

Agroparts: www.HARDI-INTERNATIONAL.com

HYD TWIN FORCE HYD PUMP CM HAZ
C0510-HIN, 30:03:16

Date 12.08.2020 11:36

parts-n°	order qty	description
146023	1	PIN FOR COGWHEEL
146848	1	HEX. NIPPLE 3/4"BSP X 3/4"BSP
146849	1	HEX. NIPPLE 3/4"BSP X 1/2"BSP
146851	1	HEX NIPPLE 1/4"x1/4" 0.7MM
147366	1	CONNECTOR HIGH PRESS.1/4"
147438	1	RETAINING RING F.GEAR
161248	1	MOUNT BRACKET F.GAUGE
173087	1	MOUNT BRACKET F. FILTER
173491	1	FLAT STEEL 25X6 - 161MM
231910	1	PLUG 1/2" BSP
231923	1	HEX NIPPLE 1 1/4"X3/4" BSP
231955	1	NIPPLE F. PRESS GAUGE 1/4" BSP
232043	1	HYD. PIPE JOINT D10-D12
232083	1	HY HOSE CONN. D22 90 DEG.
232084	1	HY HOSE CONN. D18 90 DEG.
232087	1	HYD. PIPE JOINT 90' D10-D10
232214	1	NIPPLE 1/4" W.U. NUT DEL
241367	1	DOWTYSEAL 28.5x22
241404	1	DOWTY SEAL 1/4"
242099	1	DOWTYSEAL 1-1/4"
242218	1	GASKET F. HYDRAULIC TANK TWIN
261988	1	SPARE PARTS KIT/PUMP ACTUATOR
283972	1	FILTER COMPLETE F. TWIN
284260	1	GAUGE F. HYD. TANK TWIN
284648	1	PUMP, HYD, HAC 462, M4PV58
284804	1	GASKET SET F.HY PUMP M4PV45
285022	1	HOSE HY X 1/2 X 67.0"
285023	1	HOSE HY X 3/4 X 19.75"
285024	1	HOSE HY X 3/4 X 63.0"ELB+ELB
285528	1	HOSE HY X 3/4 X 279.5"STR+ELB
285540	1	GAUGE 250 BAR
285557	1	HOSE HY X 3/8 X 338.5"
285649	1	GEAR BOX F.1000RPM TWIN FORCE
320961	1	FITT.DK CAPNUT 1-1/2" BSP
331273	1	O-RING D44/D38X2 F.1-1/2"
410281	1	BOLT HEX 8.8 DEL M6X25 DIN933 A2
421046	1	BOLT HEX M8X25/25 A2 SS DIN933
421127	1	SCREW M10X100 8.8 CHJ
430438	1	BOLT HEX 8.8 DEL M12X65
430721	1	BOLT HEX 8.8 DEL M12X40 FT
440182	1	SCREW NO.14 3/4" STAINLESS
451056	1	BOLT ALLEN HEAD M14 X 35
460143	1	LOCK NUT M8 SST A2 DIN985
460261	1	NUT HEX M6X1.00 LOCK DIN985 A2 SS
471125	1	WASHER M6U 6.4X14X1.2,A2 SS
471127	1	WASHER, M12, Ø24/13X24X2.5 SS
471173	1	WASHER D28.0/15.0 X 2.5
480728	1	PIN D3.2X20 SPLIT
614906	1	COVER F. HY-TANK
615879	1	BRACKET F.ACTUATOR TWIN/STD
615880	1	BRACKET F/ ACTUATOR TWIN/MT/ZU
637683	1	HYD.RESERVOIR F. TWIN FORCE
637874	1	PUMP BRACKET 463/HAZ
730916	1	HYDRAULIC BLOCK HAZ
730963	1	ACTUATOR F.PUMP TWIN FORCE
782018	1	BREATHER ASSY. F. HYD TANK
782019	1	OIL LEVEL GLASS 76 MM
784019	1	HOSE HY X 1/4 X 078.75"STR+ELB
28010200	1	GEAR M7 28010100 540
28402503	1	FILTER ELEMENT TWIN
97602003	1	DECAL F.MAN.TWIN FORCE 80'-90'

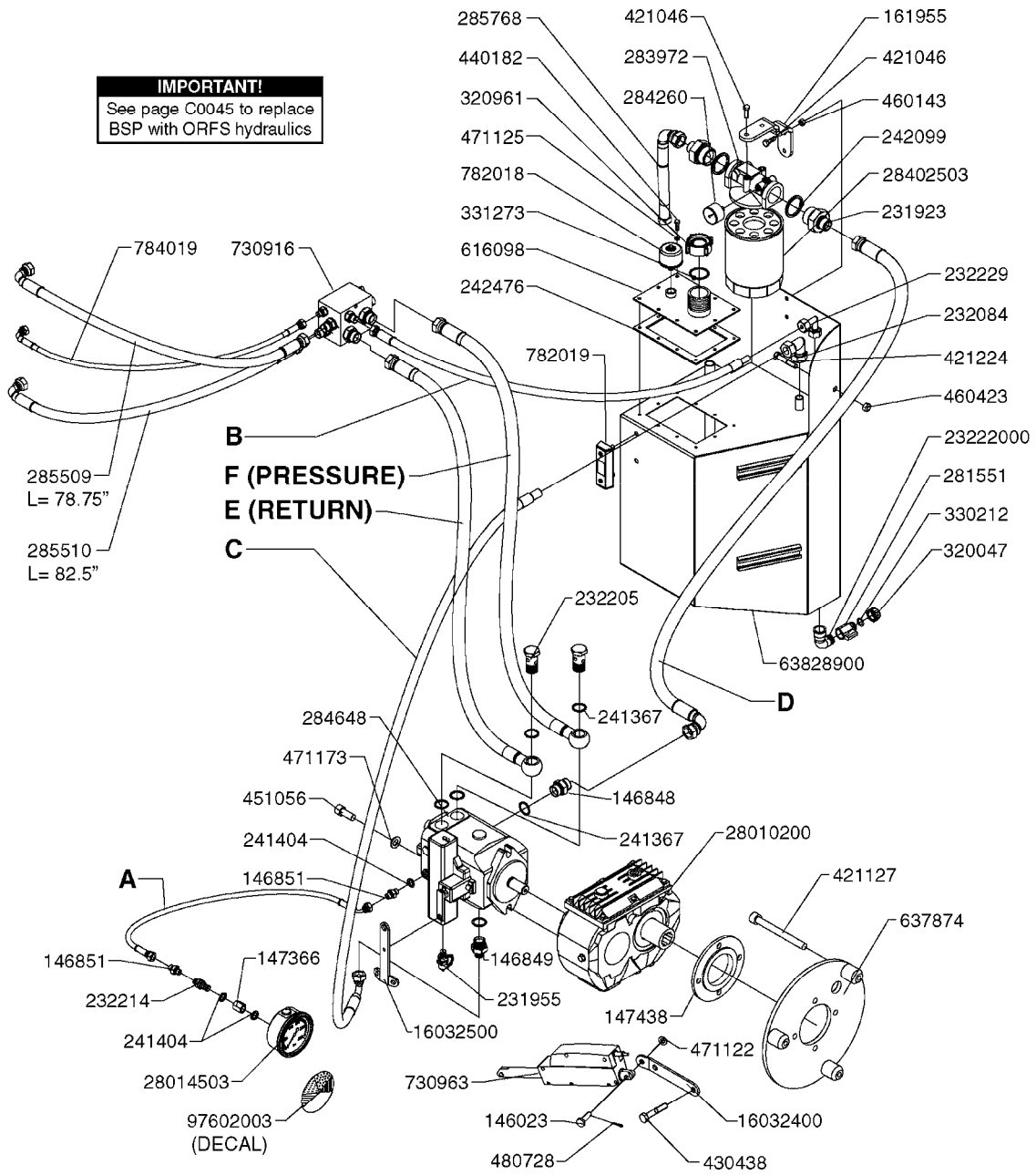

MODEL:	A: 1/4"	B: 3/8"	C: 1/2"	D: 3/4"	E: 3/4"	F: 3/4"
CM+ 750:	784080	285585 (03) 28031700	285600	28010900	28011000 (03) 28031500	28011000 (03) 28031500
CM+ 875/1200:	784080	285557 (03) 28031800	285600	28010900	28011100 (03) 28031600	28011100 (03) 28031600

Agroparts: www.HARDI-INTERNATIONAL.com

HYD TWIN FORCE HYD PUMP CM+HAZ
C0520-HIN, 30:03:16

Date 12.08.2020 11:36

parts-n°	order qty	description
146023	1	PIN FOR COGWHEEL
146848	1	HEX. NIPPLE 3/4"BSP X 3/4"BSP
146849	1	HEX. NIPPLE 3/4"BSP X 1/2"BSP
146851	1	HEX NIPPLE 1/4"x1/4" 0.7MM
147366	1	CONNECTOR HIGH PRESS.1/4"
147438	1	RETAINING RING F.GEAR
161955	1	MOUNT BRACKET F. FILTER
231923	1	HEX NIPPLE 1 1/4"X3/4" BSP
231955	1	NIPPLE F. PRESS GAUGE 1/4" BSP
232084	1	HY HOSE CONN. D18 90 DEG.
232205	1	BANJO BOLT 3/4" DELTA
232214	1	NIPPLE 1/4" W.U. NUT DEL
232229	1	HY HOSE CONN. D12 90 DEG.
241367	1	DOWTYSEAL 28.5x22
241404	1	DOWTY SEAL 1/4"
242099	1	DOWTYSEAL 1-1/4"
242476	1	SEAL HYD. TANK CM+ TWIN
281551	1	BALL VALVE 1/2"
283972	1	FILTER COMPLETE F. TWIN
284260	1	GAUGE F. HYD. TANK TWIN
284648	1	PUMP, HYD, HAC 462, M4PV58
285509	1	HOSE HY X 1/2 X 78.75"STR+ELB
285510	1	HOSE HY X 1/2 X 82.5"STR+ELB
285557	1	HOSE HY X 3/8 X 338.5"
285585	1	HOSE HY X 3/8" L=303.25"
285600	1	HOSE HY X 1/2" L=126.00"
285768	1	HOSE HY X 3/4" L=8.75"
320047	1	FITT.DK CAPNUT 1/2" BSP
320961	1	FITT.DK CAPNUT 1-1/2" BSP
330212	1	O-RING D19/D14X2.4 F.1/2"NUT
331273	1	O-RING D44/D38X2 F.1-1/2"
421046	1	BOLT HEX M8X25/25 A2 SS DIN933
421127	1	SCREW M10X100 8.8 CHJ
421224	1	BOLT HEX 8.8 DEL M10X55
430438	1	BOLT HEX 8.8 DEL M12X65
440182	1	SCREW NO.14 3/4" STAINLESS
451056	1	BOLT ALLEN HEAD M14 X 35
460143	1	LOCK NUT M8 SST A2 DIN985
460423	1	NUT HEX M10X1.50 LOCK DIN985A2 SS
471122	1	WASHER, M10, Ø20/10.5X 2.0, SS
471125	1	WASHER M6U 6.4X14X1.2,A2 SS
471173	1	WASHER D28.0/15.0 X 2.5
480728	1	PIN D3.2X20 SPLIT
616098	1	COVER F. HY-TANK CM PLUS
637874	1	PUMP BRACKET 463/HAZ
730916	1	HYDRAULIC BLOCK HAZ
730963	1	ACTUATOR F.PUMP TWIN FORCE
782018	1	BREATHER ASSY. F. HYD TANK
782019	1	OIL LEVEL GLASS 76 MM
784019	1	HOSE HY X 1/4 X 078.75"STR+ELB
784080	1	HOSE HY X 1/4" L=130.00"
16032400	1	BRACKET F.ACTUATOR GEAR
16032500	1	ARM FOR TWINPUMP GEAR
23222000	1	90 DEGREE ELBOW 1/2" GALV.
28010200	1	GEAR M7 28010100 540
28010900	1	HOSE HY X 3/4" X 126"
28011000	1	HOSE HY X 3/4" X 295.25"
28011100	1	HOSE HY X 3/4" X 330.75"
28014503	1	GAUGE 4"BR REAR PSI4000
28031500	1	HOSE HY X 3/4" X 267.75"
28031600	1	HYD. HOSE 3/4" L=7700/BANJO

parts-n°	order qty	description
28031700	1	HOSE HY X 3/4" X 275.5"
28031800	1	HOSE HY X 3/8" L=311.0"
28402503	1	FILTER ELEMENT TWIN
63828900	1	HY TANK CM+ 13 GAL.
97602003	1	DECAL F.MAN.TWIN FORCE 80'-90'

HYD TWIN FORCE PUMP/TANK - NCM
C0530-HIN, 30:03:16

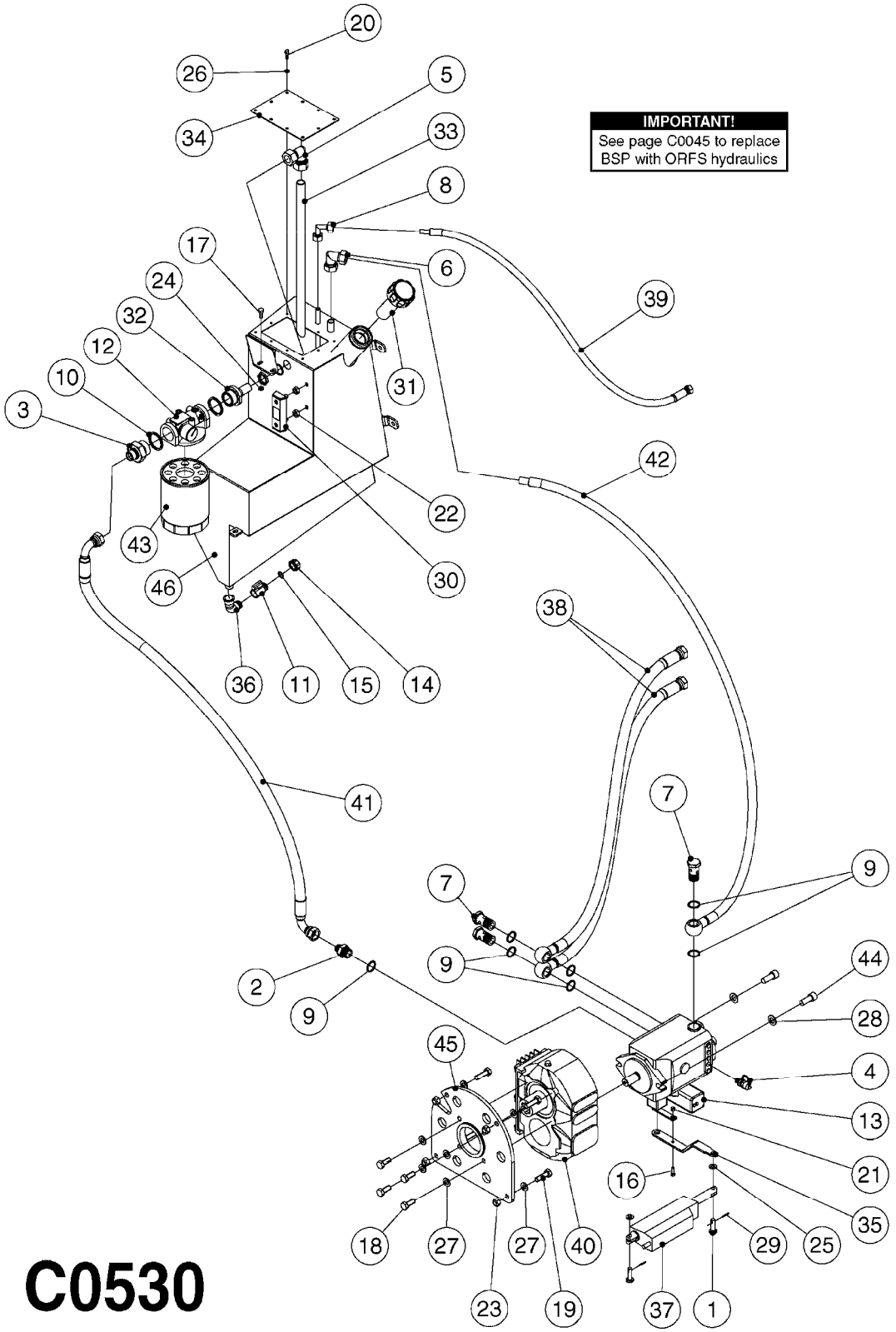

C0530

Agroparts: www.HARDI-INTERNATIONAL.com

HYD TWIN FORCE PUMP/TANK - NCM
C0530-HIN, 30:03:16

Date 12.08.2020 11:36

Pos.	parts-n°	order qty	description
1	146023	1	PIN FOR COGWHEEL
2	146849	1	HEX. NIPPLE 3/4"BSP X 1/2"BSP
3	231923	1	HEX NIPPLE 1 1/4"X3/4" BSP
4	231955	1	NIPPLE F. PRESS GAUGE 1/4" BSP
5	232083	1	HY HOSE CONN. D22 90 DEG.
6	232084	1	HY HOSE CONN. D18 90 DEG.
7	232205	1	BANJO BOLT 3/4" DELTA
8	232229	1	HY HOSE CONN. D12 90 DEG.
9	241367	1	DOWTYSEAL 28.5x22
10	242099	1	DOWTYSEAL 1-1/4"
11	281551	1	BALL VALVE 1/2"
12	283972	1	FILTER COMPLETE F. TWIN
13	284648	1	PUMP, HYD, HAC 462, M4PV58
14	320047	1	FITT.DK CAPNUT 1/2" BSP
15	330212	1	O-RING D19/D14X2.4 F.1/2"NUT
16	410362	1	BOLT HEX 8.8 SS M6X20
17	420582	1	BOLT HEX 8.8 DEL M8X20 FT A2
18	430286	1	BOLT HEX 8.8 DEL M12X30 FT
19	430721	1	BOLT HEX 8.8 DEL M12X40 FT
20	440182	1	SCREW NO.14 3/4" STAINLESS
21	460261	1	NUT HEX M6X1.00 LOCK DIN985 A2 SS
22	460423	1	NUT HEX M10X1.50 LOCK DIN985A2 SS
23	460703	1	NUT HEX M12X1.75 LOCK DIN985A2 SS
24	470407	1	WASHER D14.8D8.1X2 LOCK SS
25	471122	1	WASHER, M10, Ø20/10.5X 2.0, SS
26	471125	1	WASHER M6U 6.4X14X1.2,A2 SS
27	471127	1	WASHER, M12, Ø24/13X24X2.5 SS
28	471173	1	WASHER D28.0/15.0 X 2.5
29	480728	1	PIN D3.2X20 SPLIT
30	782019	1	OIL LEVEL GLASS 76 MM
31	786016	1	CAP FOR HYDRAULIC TANK, TWIN
32	14037800	1	NIPPLE 1-1/4"-3/4"-D22 BSP HY
33	15051200	1	PIPE D22.0 X 2.0 L=19.9"
34	16115500	1	COVER F.HYDRAULIC TANK NCM
35	16140900	1	TWIN PUMP ACTUATOR ARM NCM
36	23222000	1	90 DEGREE ELBOW 1/2" GALV.
37	26047400	1	ACTUATOR 0-130MM L=0,5M/4WIREAMP
38	28031600	1	HYD. HOSE 3/4" L=7700/BANJO 6600
38	28060700	1	HYD. HOSE 3/4" L=281.5"/BANJO 4400
39	28031800	1	HOSE HY X 3/8" L=311.0" 6600
39	28060800	1	HOSE HY X 3/8" L=299.2"OML-D12 4400
40	28046300	1	GEAR M7 28102300 PAINT.RED 540 4400
41	28063400	1	HOSE HYX1/2" L=39"OML90° BANJO
42	28063500	1	HOSE HYX1/2" L=58.3"OML90°-D18
43	28402503	1	FILTER ELEMENT TWIN
44	45002000	1	BOLT M14X60 DIN 916 DELTA
45	61033400	1	BRACKET FOR TWIN GEARBOX NCM
46	63035900	1	HYDRAULIC OIL TANK NCM

HYD - 2 ROW GRAPE B20 HY
C0540-HIN, 30:03:16

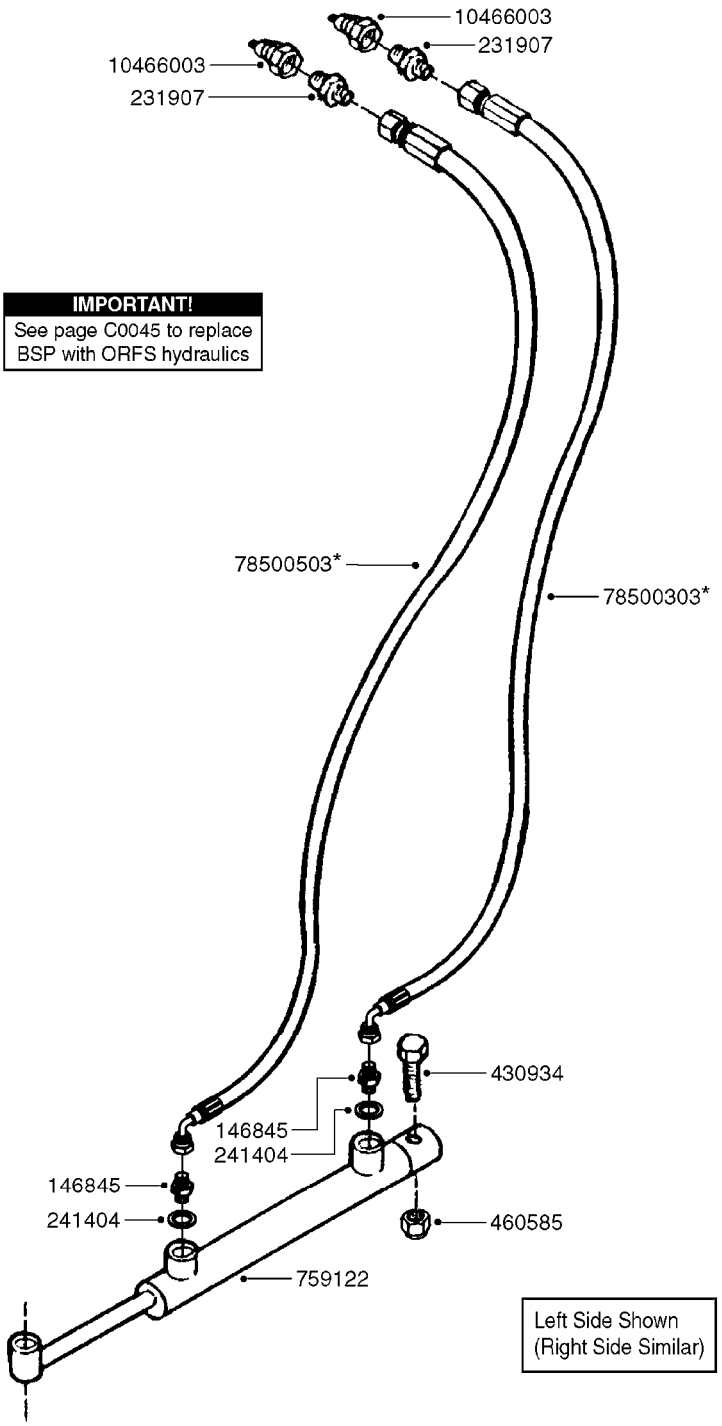

*** REPLACEMENT HOSE REQUIRES ADAPTER (146845) & SEAL (241404) ON CYLINDER**

C0540

Agroparts: www.HARDI-INTERNATIONAL.com

HYD - 2 ROW GRAPE B20 HY
C0540-HIN, 30:03:16

Date 12.08.2020 11:36

parts-n°	order qty	description
146845	1	HEX NIPPLE 1/4"X1/4"
231907	1	HEX NIPPLE 1/4"BSP X 1/2"NPT
241404	1	DOWTY SEAL 1/4"
430934	1	BOLT HEX 8.8 DEL M16X80
460585	1	LOCKING NUT M16 DIN985 A2 SS
759122	1	CYLINDER D40/20 R150 ADJUSTABLE
10466003	1	COUPLER PIONEER 8010-04 1/2NPT
78500303	1	HOSE HY X 1/4 X 236.2" STR+ELB
78500503	1	HOSE HY X 1/4 X 254.7" STR+ELB

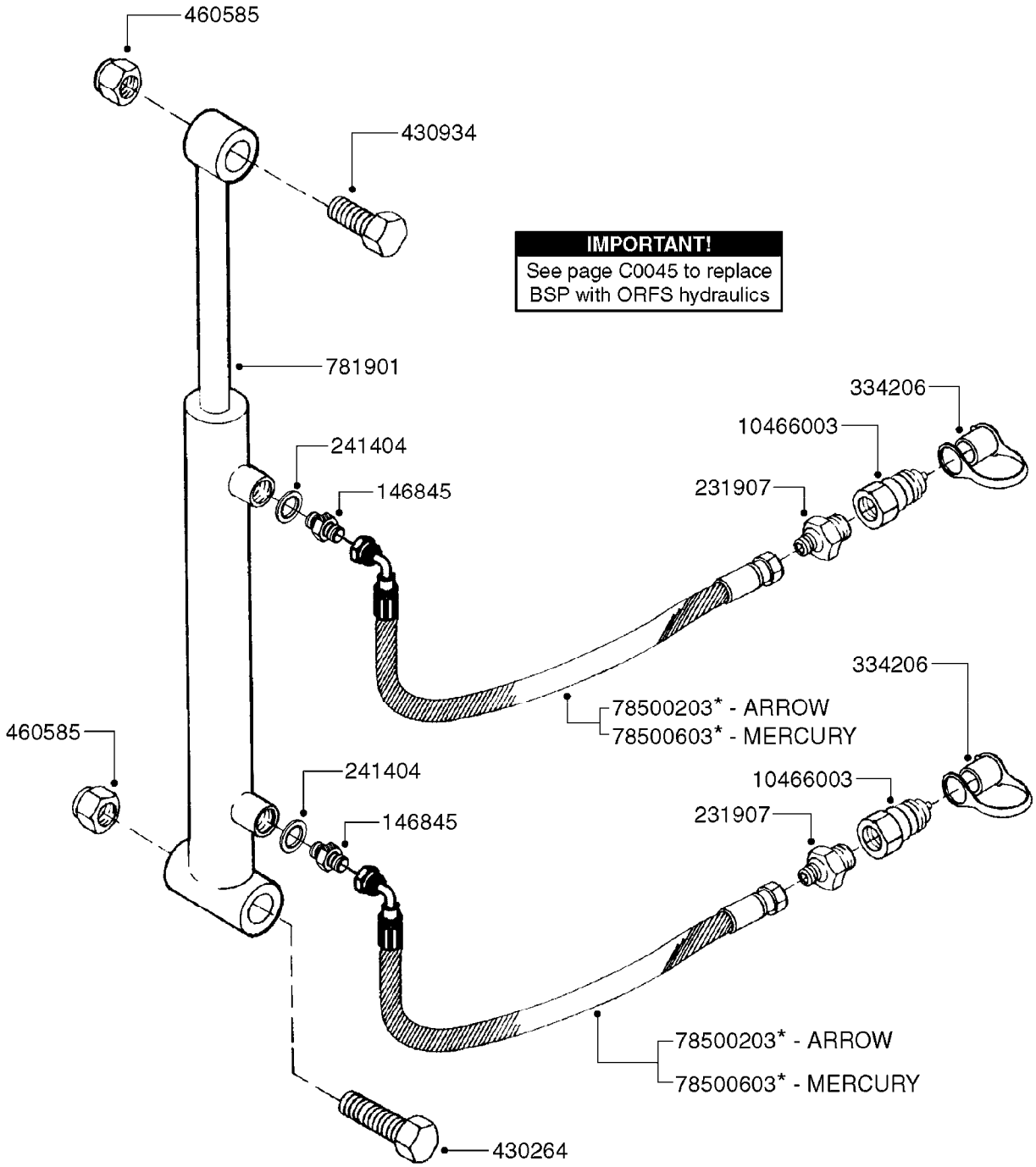

*** REPLACEMENT HOSE REQUIRES ADAPTER (146845) & SEAL (241404) ON CYLINDER**

C0550

Agroparts: www.HARDI-INTERNATIONAL.com

HYD - LIFT B20/B40 H
C0550-HIN, 30:03:16

Date 12.08.2020 11:36

parts-n°	order qty	description
146845	1	HEX NIPPLE 1/4"X1/4"
231907	1	HEX NIPPLE 1/4"BSP X 1/2"NPT
241404	1	DOWTY SEAL 1/4"
334206	1	DUST HOOD FOR HY-COUPLING
430264	1	BOLT HEX 8.8 DEL M16X100
430934	1	BOLT HEX 8.8 DEL M16X80
460585	1	LOCKING NUT M16 DIN985 A2 SS
781901	1	CYLINDER BOOM HEIGHT
10466003	1	COUPLER PIONEER 8010-04 1/2NPT
78500203	1	HOSE HY X 1/4 X 224.4" STR+ELB
78500603	1	HOSE HY X 1/4 X 271.7" STR+ELB

HYD - 2 ROW GRAPE B40 HZ
C0560-HIN, 30:03:16

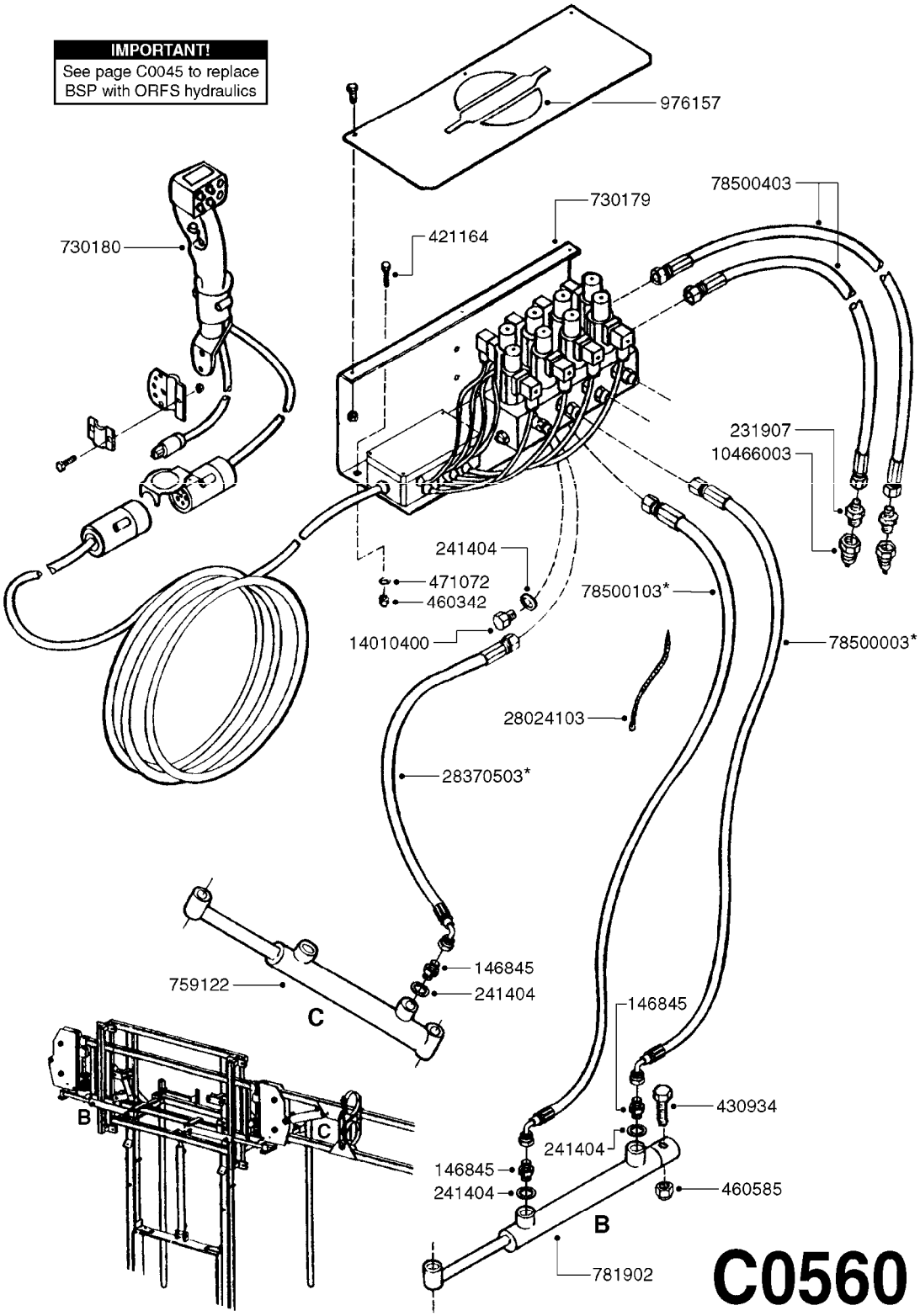

* REPLACEMENT HOSE REQUIRES ADAPTER (146845) & SEAL (241404) ON CYLINDER

Agroparts: www.HARDI-INTERNATIONAL.com

HYD - 2 ROW GRAPE B40 HZ
C0560-HIN, 30:03:16

Date 12.08.2020 11:36

parts-n°	order qty	description
146845	1	HEX NIPPLE 1/4"X1/4"
231907	1	HEX NIPPLE 1/4"BSP X 1/2"NPT
241404	1	DOWTY SEAL 1/4"
421164	1	BOLT HEX 8.8 DEL M10X70
430934	1	BOLT HEX 8.8 DEL M16X80
460342	1	NUT HEX M10 DEL DIN934
460585	1	LOCKING NUT M16 DIN985 A2 SS
471072	1	WASHER M10 EL2
730179	1	HYD.KIT SOLENOID BLOCK ASSY.
730180	1	HYD.KIT JOYSTICK CTRL HANDLE
759122	1	CYLINDER D40/20 R150 ADJUSTABLE
781902	1	FOLD CYLINDER
976157	1	DECAL COMPANY (4.4" X 4.6")
10466003	1	COUPLER PIONEER 8010-04 1/2NPT
14010400	1	PLUG 1/4" BSP
28024103	1	TIE STRAP L=8" x W=3/16"
28370503	1	HOSE HY X1/4X314.93'STR+ELB
78500003	1	HOSE HY X 1/4 X 23.6" STR+ELB
78500103	1	HOSE HY X 1/4 X 31.7" STR+ELB
78500403	1	HOSE HY X 1/4 X 252" STR+STR

HYD.BLOCK EAGLE/FORCE PRE 2012
C0570-HIN, 13:05:19

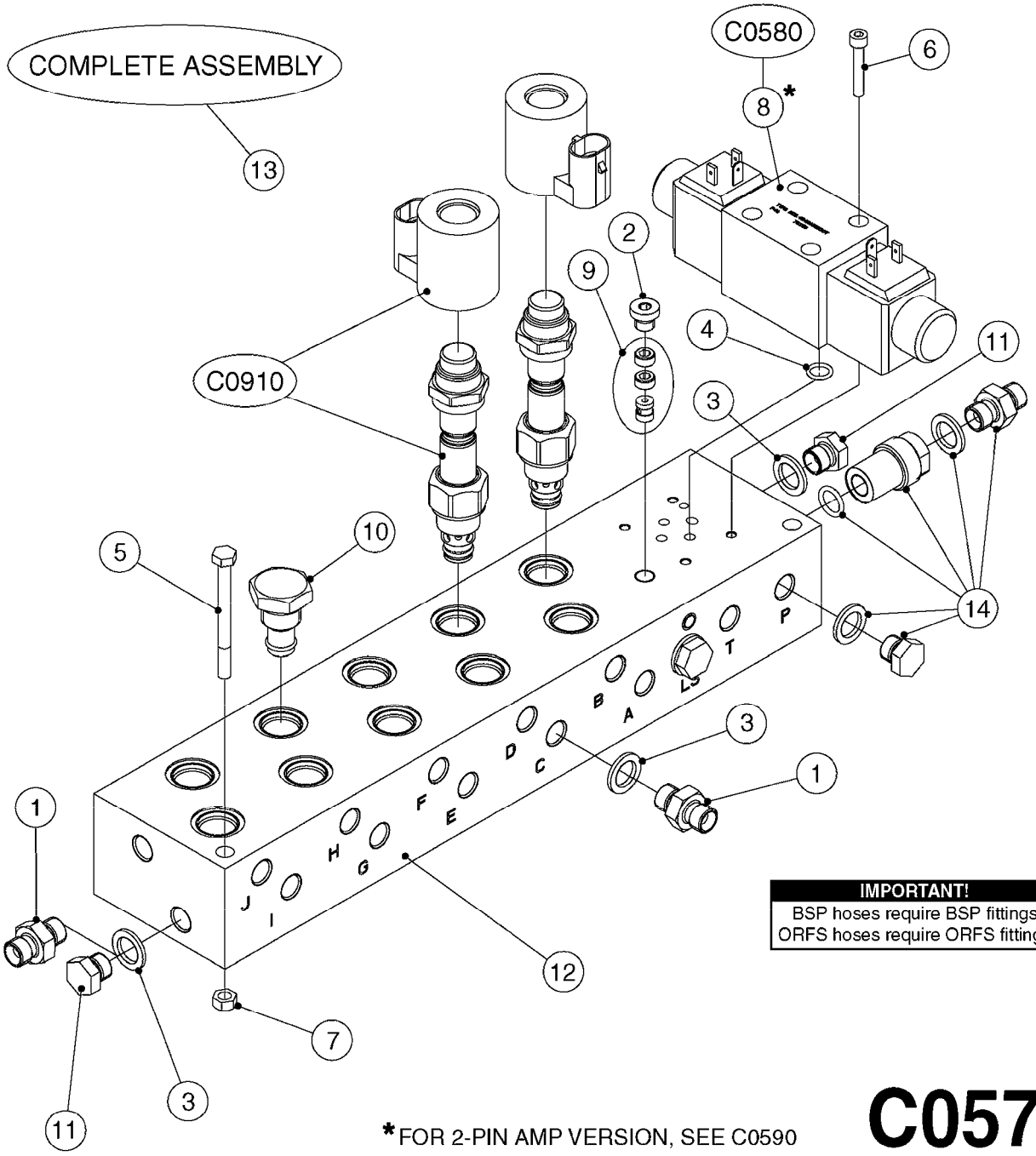

IMPORTANT!
BSP hoses require BSP fittings
ORFS hoses require ORFS fittings

*FOR 2-PIN AMP VERSION, SEE C0590

C0570

Agroparts: www.HARDI-INTERNATIONAL.com

HYD.BLOCK EAGLE/FORCE PRE 2012
C0570-HIN, 13:05:19

Date 12.08.2020 11:36

Pos.	parts-nº	order qty	description
1	146845	1	HEX NIPPLE 1/4"X1/4" BSP
1	23234500	1	HEX NIPPLE 1/4" - 9/16" ORFS
1	146851	1	HEX NIPPLE 1/4"x1/4" 0.7MM BSP
1	23234700	1	HEX NIPPLE 1/4"-9/16" - 0.7mm ORFS
1	147498	1	HEX NIPPLE 1/4"-1/4" 1.2mm BSP
1	23234100	1	HEX NIPPLE 1/4"-9/16" - 1.2mm ORFS
2	231987	1	PLUG 1/8' BSP W/GASKET
3	241404	1	DOWTY SEAL 1/4"
4	242102	1	O-RING Ø9.25X1.78 NITRIL 90SH
5	420847	1	BOLT HEX 8.8 DEL M8X85
6	450964	1	SCREW M5X30 F.CYLINDER
7	460143	1	LOCK NUT M8 SST A2 DIN985
8	782116	1	HY SOLENOID VALVE MD1L-S3/10N-D12K1/P
9	782124	1	SWITCH VALVE OUTS.1/8" 5000PSI
10	782131	1	BLIND PLUG F.3/4" CARTR.VALVE
11	14010400	1	PLUG 1/4" BSP
12	14098600	1	HYD. BLOCK SPC/FTZ 3/4" 2010
13	72679100	1	HY.BLOCK BOOM HYDR. FTZ 2010
14	74191700	1	ADJ. FLOW VALVE REPAIR KIT DHP

CETOP VALVES
C0580-HIN, 01:01:16

Date 12.08.2020 11:36

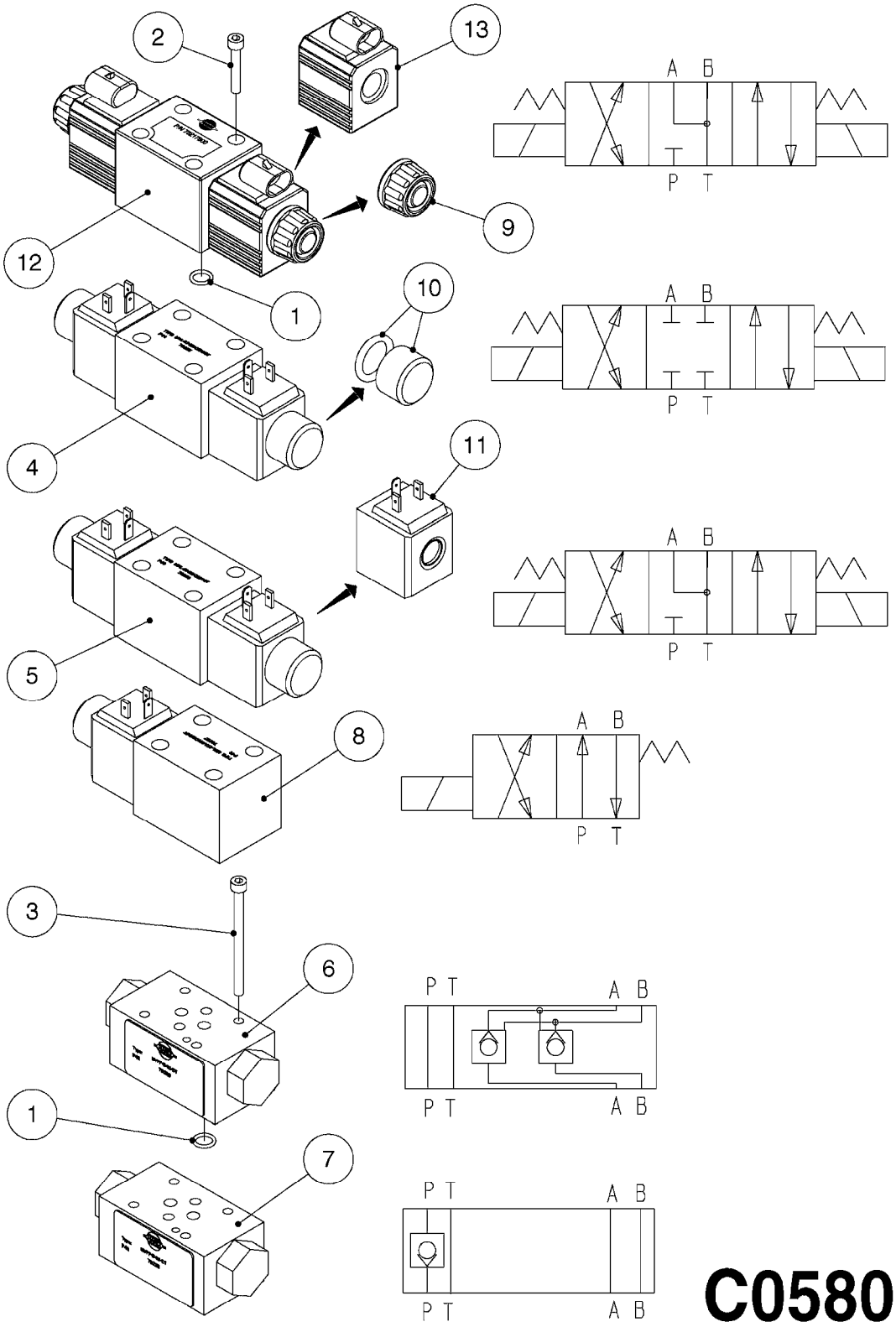

C0580

Agroparts: www.HARDI-INTERNATIONAL.com

CETOP VALVES
C0580-HIN, 01:01:16

Date 12.08.2020 11:36

Pos.	parts-nº	order qty	description
1	242102	1	O-RING Ø9.25X1.78 NITRIL 90SH
2	450964	1	SCREW M5X30 F.CYLINDER
3	450965	1	SCREW ROUND M5X70
4	782115	1	HY SOLENOID VALVE DH HYD
5	782116	1	HY SOLENOID VALVE MD1L-S3/10N-D12K1/P
6	782118	1	LOCK VALVE MVPP-D
7	782146	1	HYD. CHECK VALVE 1 WAY
8	782829	1	SOLENOID MD1L-TA/10N-D12K1/DT
9	28123700	1	CAP F.SOLENOID - MD1L
10	74187700	1	CAP + O-RING F.CETOP - MD1L
11	78216000	1	SOLENOID F.CETOP VALVE - MD1L
12	78217800	1	MAGNET VLV.MD1L-S3/10N-D12K8DT
13	78218200	1	SOLENOID W/AMP F.MD1L

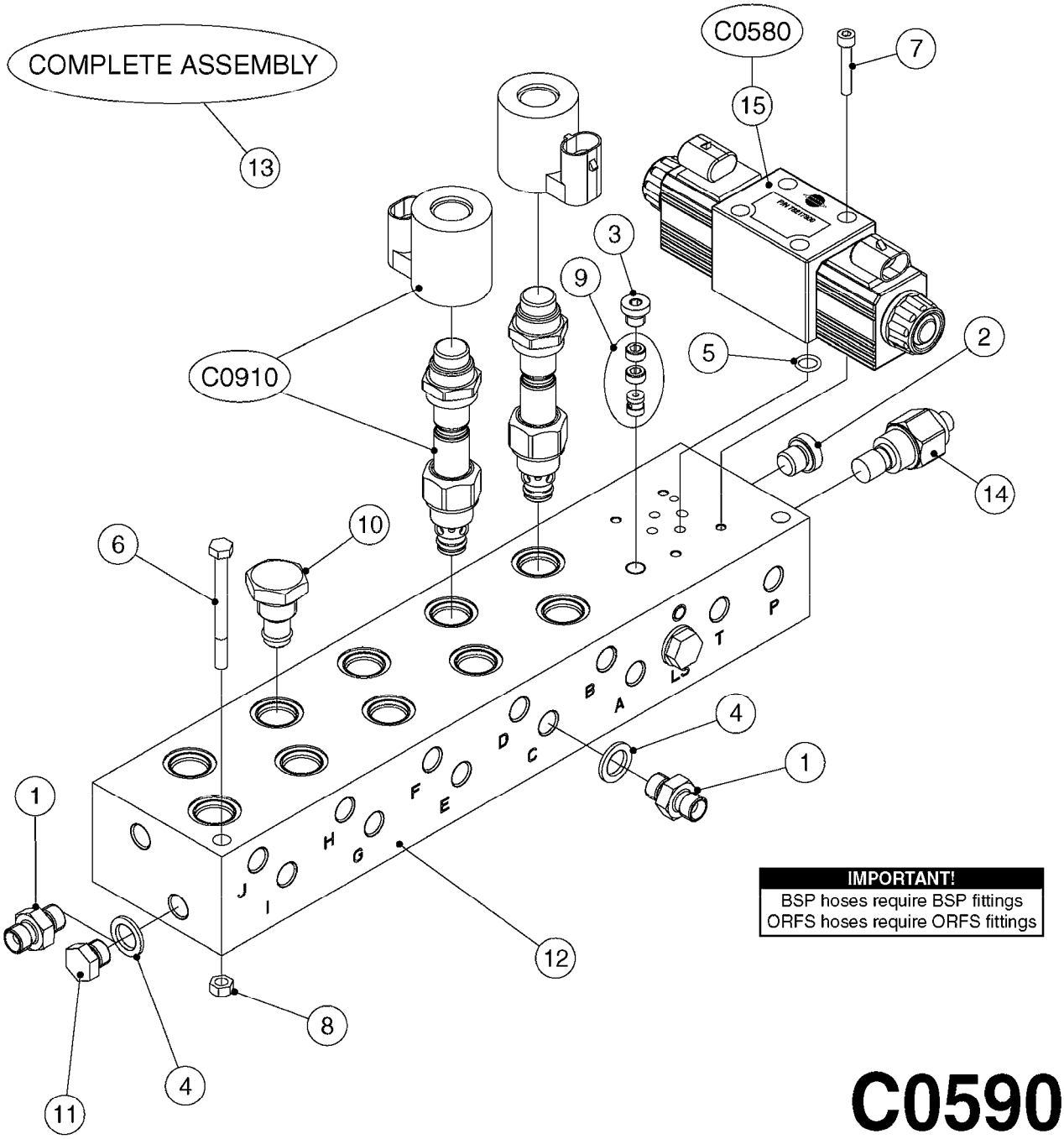

IMPORTANT!
BSP hoses require BSP fittings
ORFS hoses require ORFS fittings

C0590

Agroparts: www.HARDI-INTERNATIONAL.com

HYD.BLOCK EAGLE/FORCE 2012
C0590-HIN, 13:05:19

Date 12.08.2020 11:36

Pos.	parts-nº	order qty	description
1	146845	1	HEX NIPPLE 1/4"X1/4" BSP
1	23234500	1	HEX NIPPLE 1/4" - 9/16" ORFS
1	146851	1	HEX NIPPLE 1/4"x1/4" 0.7MM BSP
1	23234700	1	HEX NIPPLE 1/4"-9/16" - 0.7mm ORFS
1	147498	1	HEX NIPPLE 1/4"-1/4" 1.2mm BSP
1	23234100	1	HEX NIPPLE 1/4"-9/16" - 1.2mm ORFS
2	231103	1	PLUG 1/4" BSP, O-RING 08BPUP04
3	231987	1	PLUG 1/8' BSP W/GASKET
4	241404	1	DOWTY SEAL 1/4"
5	242102	1	O-RING Ø9.25X1.78 NITRIL 90SH
6	420847	1	BOLT HEX 8.8 DEL M8X85
7	450964	1	SCREW M5X30 F.CYLINDER
8	460143	1	LOCK NUT M8 SST A2 DIN985
9	782124	1	SWITCH VALVE OUTS.1/8" 5000PSI
10	782131	1	BLIND PLUG F.3/4" CARTR.VALVE
11	14010400	1	PLUG 1/4" BSP
12	14098600	1	HYD. BLOCK SPC/FTZ 3/4" 2010
13	70084403	1	HYD. BLOCK, 5P, FOLD/FLOW
14	78216800	1	FLOW REGULATING VALVE, 3/4"
15	78217800	1	MAGNET VLV.MD1L-S3/10N-D12K8DT

HYD. BLOCK TERRA FORCE
C0600-HIN, 13:05:19

Date 12.08.2020 11:36

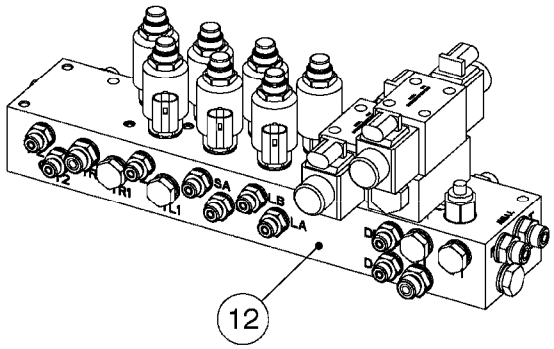

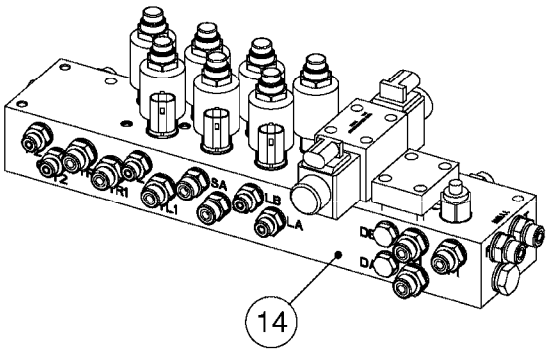

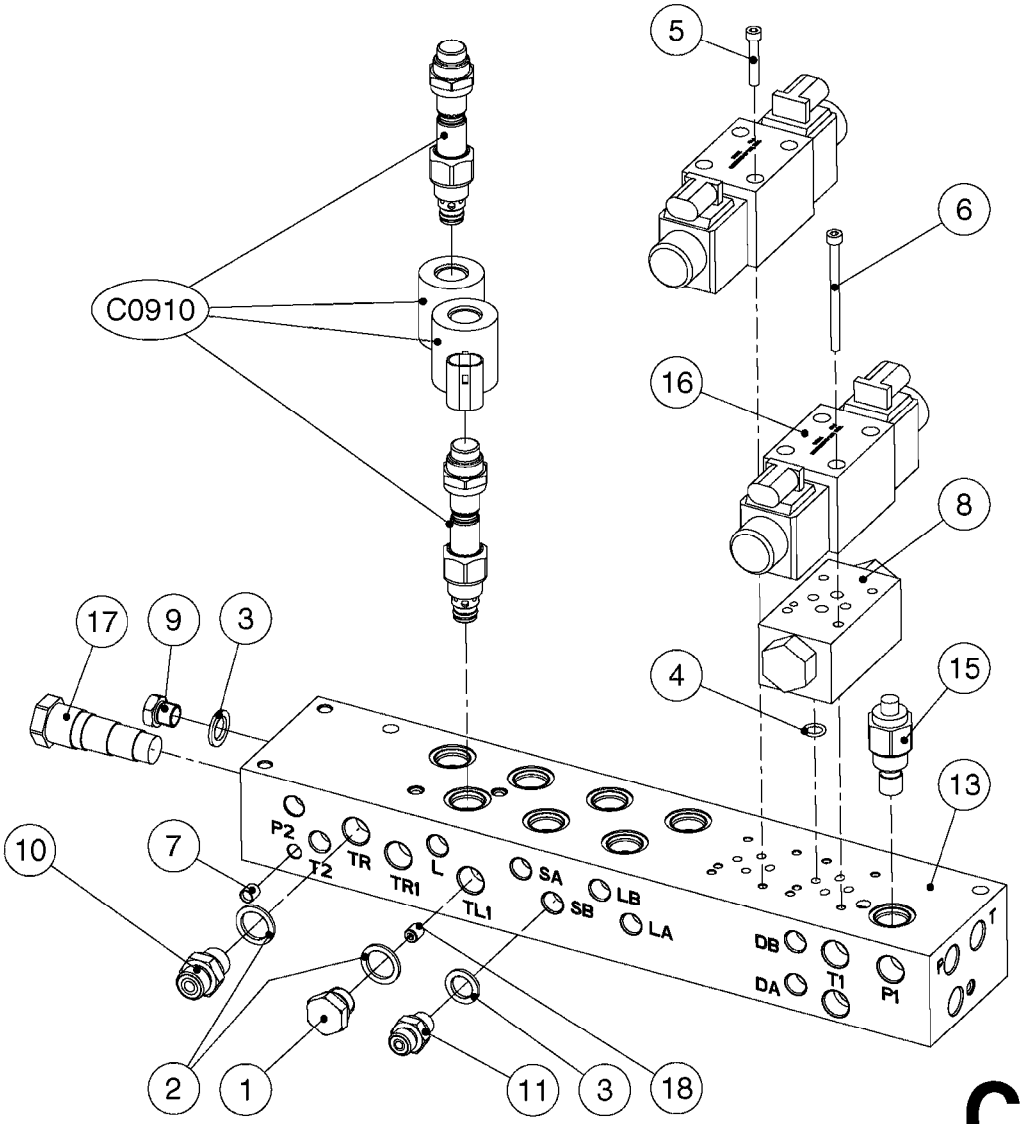

C0600

Agroparts: www.HARDI-INTERNATIONAL.com

HYD. BLOCK TERRA FORCE
C0600-HIN, 13:05:19

Date 12.08.2020 11:36

Pos.	parts-n°	order qty	description
1	146790	1	PLUG 3/8" RG L=20 SS
2	240866	1	DOWTYSEAL 3/8"
3	241404	1	DOWTY SEAL 1/4"
4	242102	1	O-RING Ø9.25X1.78 NITRIL 90SH
5	450964	1	SCREW M5X30 F.CYLINDER
6	450965	1	SCREW ROUND M5X70
7	480813	1	BALL LOCK HY D8.0 SS BALL/BUSH
8	782118	1	LOCK VALVE MVPP-D
9	14010400	1	PLUG 1/4" BSP
10	23234300	1	HEX NIPPLE 3/8"-11/16"
11	23234500	1	HEX NIPPLE 1/4" - 9/16"
12	72761900	1	HYD. BLOCK ASM TDZ D.C.
13	72769700	1	HYD. BLOCK TDZ, SPARE PARTS
14	72773000	1	HYD. BLOCK ASM TDZ AUTOTERRAIN
15	78216800	1	FLOW REGULATING VALVE, 3/4"
16	78217800	1	MAGNET VLV.MD1L-S3/10N-D12K8DT
17	78219700	1	FLOWDIV FD50-4401-0-N PATRON
18	78603200	1	ONE WAY RESTRICTOR M6X1.7

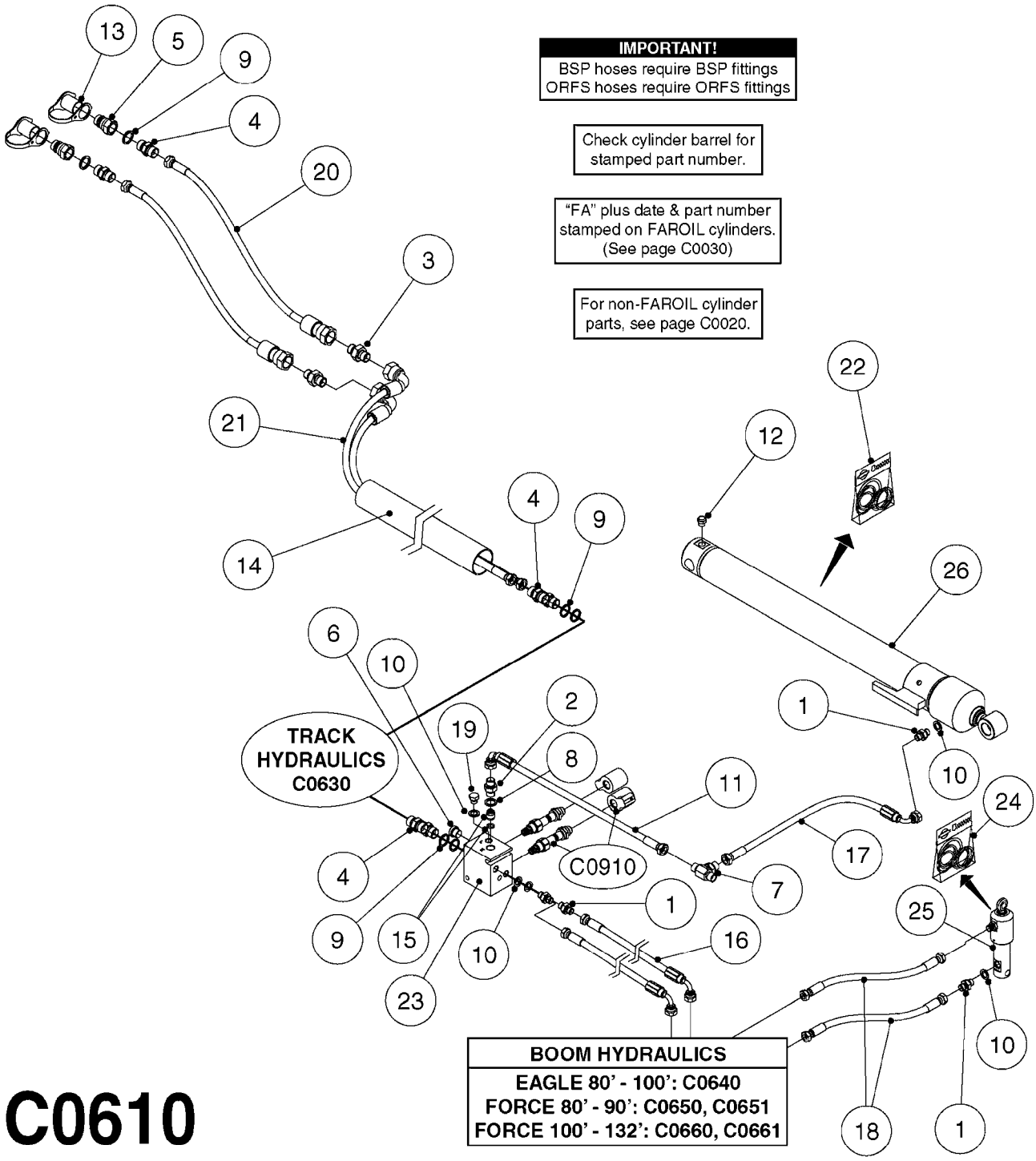
IMPORTANT!
BSP hoses require BSP fittings
ORFS hoses require ORFS fittings
Check cylinder barrel for stamped part number.
"FA" plus date & part number stamped on FAROIL cylinders. (See page C0030)
For non-FAROIL cylinder parts, see page C0020.
TRACK HYDRAULICS C0630
C0910
BOOM HYDRAULICS
EAGLE 80' - 100': C0640
FORCE 80' - 90': C0650, C0651
FORCE 100' - 132': C0660, C0661
13
5
9
4
20
3
21
14
4
9
22
12
26
6
10
2
19
8
1
10
11
24
17
4
9
15
23
10
1
7
16
25
10
18
1

C0610

BASIC HYDRAULICS NCM 4400/6600
C0610-HIN, 13:05:19

Date 12.08.2020 11:36

Pos.	parts-n°	order qty	description
1	146845	1	HEX NIPPLE 1/4"X1/4" BSP
1	23234500	1	HEX NIPPLE 1/4" - 9/16" ORFS
2	146850	1	HEX NIPPLE 3/8"x3/8" - 1.8mm BSP
2	23234600	1	HEX NIPPLE 3/8"-11/16" - 1.8mm ORFS
3	147132	1	HEX NIPPLE 1/2"X1/2" BSP DEL BSP
3	23232400	1	HEX NIPPLE 13/16"-13/16" ORFS
4	147132	1	HEX NIPPLE 1/2"X1/2" BSP DEL BSP
4	23235300	1	HEX NIPPLE 1/2"-13/16" ORFS
5	230311	1	QUICK COUPLING 1/2"
6	231924	1	PLUG 3/8'
7	232057	1	T-PIECE 3/8" BSP HY. BSP
7	23240800	1	TEE 11/16"-11/16"-11/16" ORFS ORFS
8	240866	1	DOWTYSEAL 3/8"
9	241356	1	DOWTYSEAL 1/2"
10	241404	1	DOWTY SEAL 1/4"
11	284020	1	HOSE HY X 3/8" X 35.4" STR+ELB BSP
11	78560100	1	HY.HO.3/8"L= 900 STR-90° ORFS
12	284265	1	PLUG BREATHER 1/4" F/CYLINDER
13	334206	1	DUST HOOD FOR HY-COUPLING
14	341333	1	TUBE Ø57/Ø52 L=1500 BLACK PE
15	782062	1	NON-RETURN VALVE UTV 3/8"
16	784039	1	HOSE HY X 1/4 X 183.00"STR+ELB BSP
16	78503100	1	HY.HO.1/4"L= 4650 STR-90° ORFS
17	784151	1	HOSE HY 1/4 3/8 OML X 79" S+E HOSE FOR LEFT SIDE (BSP)
17	78508900	1	HY.HO.1/4"L= 2000 3/8STR-90° HOSE FOR LEFT SIDE (ORFS)
17	784152	1	HOSE HY 1/4 3/8 OML X 106" S+E HOSE FOR RIGHT SIDE (BSP)
17	78509000	1	HY.HO.1/4"L= 2700 3/8STR-90° HOSE FOR RIGHT SIDE (ORFS)
18	784161	1	HOSE HY X 1/4 X 59" STR+STR BSP
18	78509900	1	HY.HO.1/4"L= 1500 STR-STR ORFS
19	14010400	1	PLUG 1/4" BSP
20	28052100	1	HOSE HY X 1/2" X 122.0"STR+STR BSP

Pos.	parts-n°	order qty	description
20	78570500	1	HY.HO.1/2"L= 3100 STR-STR ORFS
21	28046000	1	HOSE HY X 1/2" X 114.2" STR+ELB 4400 W/O STEERING (BSP)
21	78570100	1	HY.HO.1/2"L= 2900 STR-90° 4400 W/O STEERING (ORFS)
21	28053600	1	HOSE HY X 1/2" X 100.4"STR+ELB 4400 W/STEERING (BSP)
21	78570600	1	HY.HO.1/2"L= 2550 STR-90° 4400 W/STEERING (ORFS)
21	28060400	1	HOSE HY X 1/2" X 138.2" STR+ELB 6600 W/O STEERING (BSP)
21	78570800	1	HY.HO.1/2"L= 3350 STR-90° 6600 W/O STEERING (ORFS)
21	28060500	1	HOSE HY X 1/2" X 122" STR+ELB 6600 W/STEERING (BSP)
21	78570900	1	HY.HO.1/2"L= 3100 STR-90° 6600 W/STEERING (ORFS)
22	28117300	1	SEAL KIT 78120600/07/43
23	70078103	1	HYD. BLOCK COMP. PARA-LIFT 1.8
24	75074800	1	SEAL KIT 78123400/42 SEAL KIT FOR 78100203 CYLINDER
25	78100203	1	CYL. D25/12-50/72531000 W/BSP ADAPT
26	78120600	1	CYLINDER 60/25 X 662 NAV PAR L
26	78125500	1	CYLINDER 60/25 X 662 NAV PAR R
26	78124500	1	CYLINDER 70/30 X 662 LG PAR L 4400/6600 WITH 118' TWIN FORCE
26	78125800	1	CYLINDER 70/30 X 662 LG PAR R 4400/6600 WITH 118' TWIN FORCE

BASIC HYDRAULICS CM
4500/5500/7000/8500/10000
C0615-HIN, 03:07:19

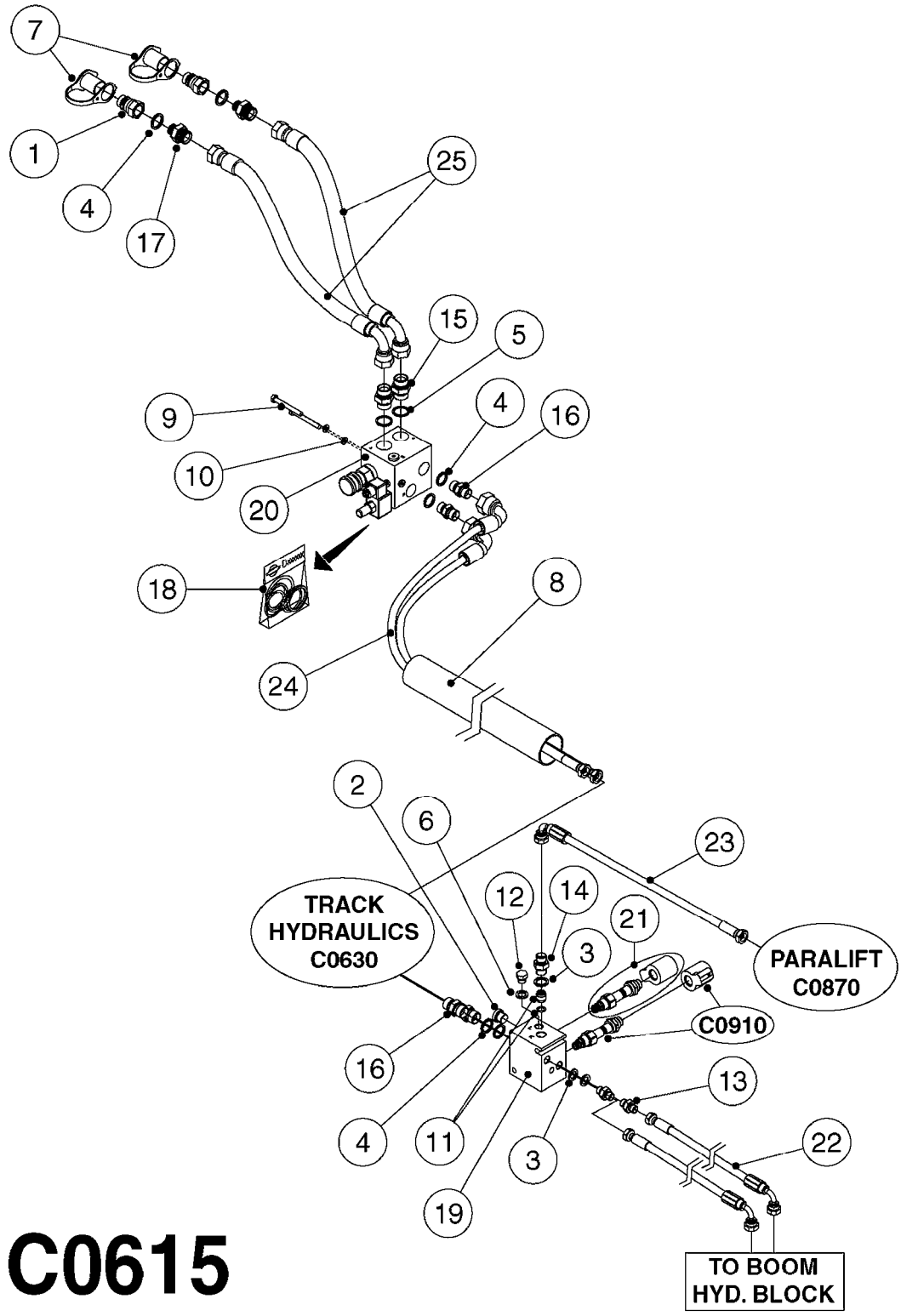

C0615

BASIC HYDRAULICS CM
4500/5500/7000/8500/10000
C0615-HIN, 03:07:19

Date 12.08.2020 11:36

Pos.	parts-n°	order qty	description
1	230311	1	QUICK COUPLING 1/2"
2	231924	1	PLUG 3/8'
3	240866	1	DOWTYSEAL 3/8"
4	241356	1	DOWTYSEAL 1/2"
5	241367	1	DOWTYSEAL 28.5x22
6	241404	1	DOWTY SEAL 1/4"
7	334206	1	DUST HOOD FOR HY-COUPLING
8	341333	1	TUBE Ø57/Ø52 L=1500 BLACK PE
9	421201	1	BOLT HEX 8.8 DEL M8X70
10	470407	1	WASHER D14.8D8.1X2 LOCK SS
11	782062	1	NON-RETURN VALVE UTV 3/8"
12	14010400	1	PLUG 1/4" BSP
13	23234300	1	HEX NIPPLE 3/8"-11/16"
14	23234600	1	HEX NIPPLE 3/8"-11/16" - 1.8mm
15	23235000	1	HEX NIPPLE 3/4"-1-3/16"
16	23235300	1	HEX NIPPLE 1/2"-13/16"
17	23236100	1	HEX NIPPLE 1/2"-1-3/16"
18	28061400	1	SEAL KIT F. 782145
19	72286200	1	HYD. BLOCK COMP. PARA-LIFT NCM
			CM 8500/10000
19	72809300	1	PARALIFT HYD.BLOCK ASSY.CM'11
			CM 4500/5500/7000
20	72809100	1	BYPASS BLOCK 782145
21	75586600	1	SOLENOID VALVE NC, + COIL
22	78503603	1	HY.HO.3/8"L= 4700
			STR-90°
			CM 4500
22	78560000	1	HY.HO.3/8"L= 5600
			STR-90°
			CM 5500/7000
23	78560100	1	HY.HO.3/8"L= 900
			STR-90°
24	78570100	1	HY.HO.1/2"L= 2900
			STR-90°
			CM 4500 NO STEER
24	78570600	1	HY.HO.1/2"L= 2550
			STR-90°
			CM 4500 STEER
24	78570800	1	HY.HO.1/2"L= 3350
			STR-90°
			CM 8500/10000
24	78573200	1	HY.HO.1/2" L= 3600
			STR-90°
			CM 5500/7000 NO STEER
24	78573300	1	HY.HO.1/2" L= 3200
			STR-90°
			CM 5500/7000 STEER
25	78580600	1	HY.HO.3/4"L= 3100
			STR-90°
			CM 4500/8500/10000
25	78583700	1	HY.HO.3/4" L= 3400
			STR-90°
			CM 5500/7000

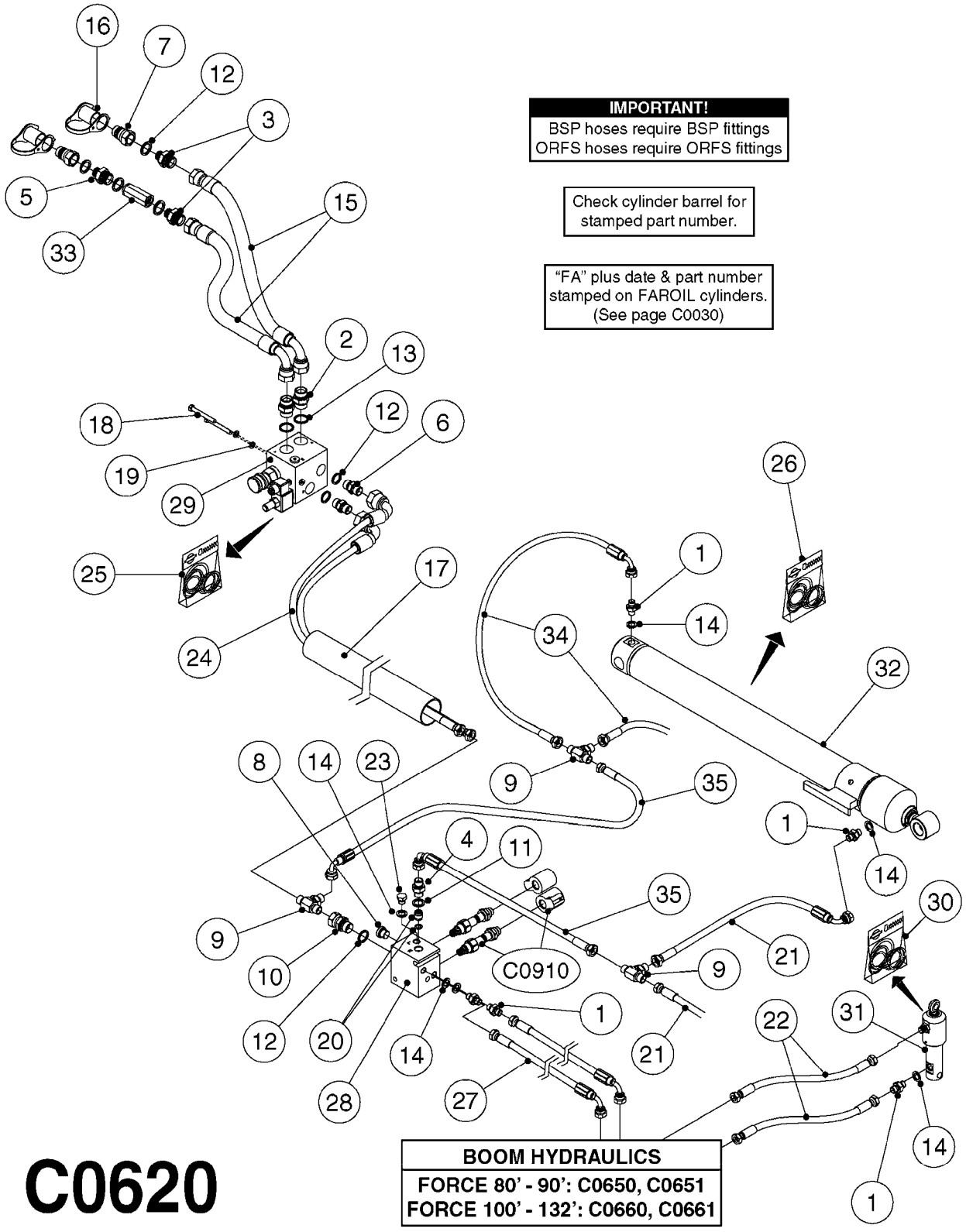

IMPORTANT!
BSP hoses require BSP fittings
ORFS hoses require ORFS fittings

Check cylinder barrel for stamped part number.

"FA" plus date & part number stamped on FAROIL cylinders. (See page C0030)

C0620

BOOM HYDRAULICS

FORCE 80' - 90': C0650, C0651
FORCE 100' - 132': C0660, C0661

Agroparts: www.HARDI-INTERNATIONAL.com

BASIC HYDRAULICS NCM 9000
C0620-HIN, 14:05:19

Date 12.08.2020 11:36

Pos.	parts-n°	order qty	description
1	146845	1	HEX NIPPLE 1/4"X1/4" BSP
1	23234500	1	HEX NIPPLE 1/4" - 9/16" ORFS
2	146848	1	HEX. NIPPLE 3/4"BSP X 3/4"BSP BSP
2	23235000	1	HEX NIPPLE 3/4"-1-3/16" ORFS
3	146849	1	HEX. NIPPLE 3/4"BSP X 1/2"BSP BSP
3	23236100	1	HEX NIPPLE 1/2"-1-3/16" ORFS
4	146850	1	HEX NIPPLE 3/8"x3/8" - 1.8mm BSP
4	23234600	1	HEX NIPPLE 3/8"-11/16" - 1.8mm ORFS
5	147132	1	HEX NIPPLE 1/2"X1/2" BSP DEL
6	147132	1	HEX NIPPLE 1/2"X1/2" BSP DEL BSP
6	23235300	1	HEX NIPPLE 1/2"-13/16" ORFS
7	230311	1	QUICK COUPLING 1/2"
8	231924	1	PLUG 3/8'
9	232057	1	T-PIECE 3/8" BSP HY. BSP
9	23240800	1	TEE 11/16"-11/16"-11/16" ORFS ORFS
10	232289	1	NIPPLE 1/2" W. 1/2" UNION DEL BSP
10	23242000	1	HYD NIPPLE 1/2 X 13/16 SWIVEL ORFS
11	240866	1	DOWTYSEAL 3/8"
12	241356	1	DOWTYSEAL 1/2"
13	241367	1	DOWTYSEAL 28.5x22
14	241404	1	DOWTY SEAL 1/4"
15	285185	1	HOSE,HYD,3/4" L=3100MM BSP
15	78580600	1	HY.HO.3/4"L= 3100 STR-90° ORFS
16	334206	1	DUST HOOD FOR HY-COUPLING
17	341333	1	TUBE Ø57/Ø52 L=1500 BLACK PE
18	421201	1	BOLT HEX 8.8 DEL M8X70
19	470407	1	WASHER D14.8D8.1X2 LOCK SS
20	782062	1	NON-RETURN VALVE UTV 3/8"
21	784152	1	HOSE HY 1/4 3/8 OML X 106" S+E BSP
21	78509000	1	HY.HO.1/4"L= 2700 3/8STR-90° ORFS
22	784161	1	HOSE HY X 1/4 X 59" STR+STR BSP
22	78509900	1	HY.HO.1/4"L= 1500 STR-STR ORFS
23	14010400	1	PLUG 1/4" BSP
24	28053600	1	HOSE HY X 1/2" X 100.4"STR+ELB BSP

Pos.	parts-n°	order qty	description
24	78570600	1	HY.HO.1/2"L= 2550 STR-90° ORFS
25	28061400	1	SEAL KIT F. 782145
26	28117300	1	SEAL KIT 78120600/07/43
27	28435003	1	HOSE HY X1/4X216.00'STR+ELB BSP
27	78526600	1	HY.SL.1/4' L= 5500 L-V ORFS
28	70078103	1	HYD. BLOCK COMP. PARA-LIFT 1.8
29	72809100	1	BYPASS BLOCK 782145
30	75074800	1	SEAL KIT 78123400/42 SEAL KIT FOR 78100203 CYLINDER
31	78100203	1	CYL. D25/12-50/72531000 W/BSP ADAPT
32	78120700	1	SIN.CYL.Ø60/25-725 2XØ25 LEFT CYLINDER FOR LEFT SIDE
32	78125600	1	SIN.CYL.Ø60/25_725_2XØ25 RIGHT CYLINDER FOR RIGHT SIDE
33	78200204	1	CHECK VALVE HY 1/2" BSP-1/2BAR
34	78401504	1	HOSE HY X1/4L=49"1/4ELB3/8STR BSP
34	78508900	1	HY.HO.1/4"L= 2000 3/8STR-90° ORFS
35	78501304	1	HOSE HY X3/8L=55"3/8STR 1/2ELB BSP
35	78565000	1	HY.HO.3/8"L= 1400 STR-BANJO ORFS

TRACK HYDRAULICS NCM 4400/6600
C0630-HIN, 14:05:19

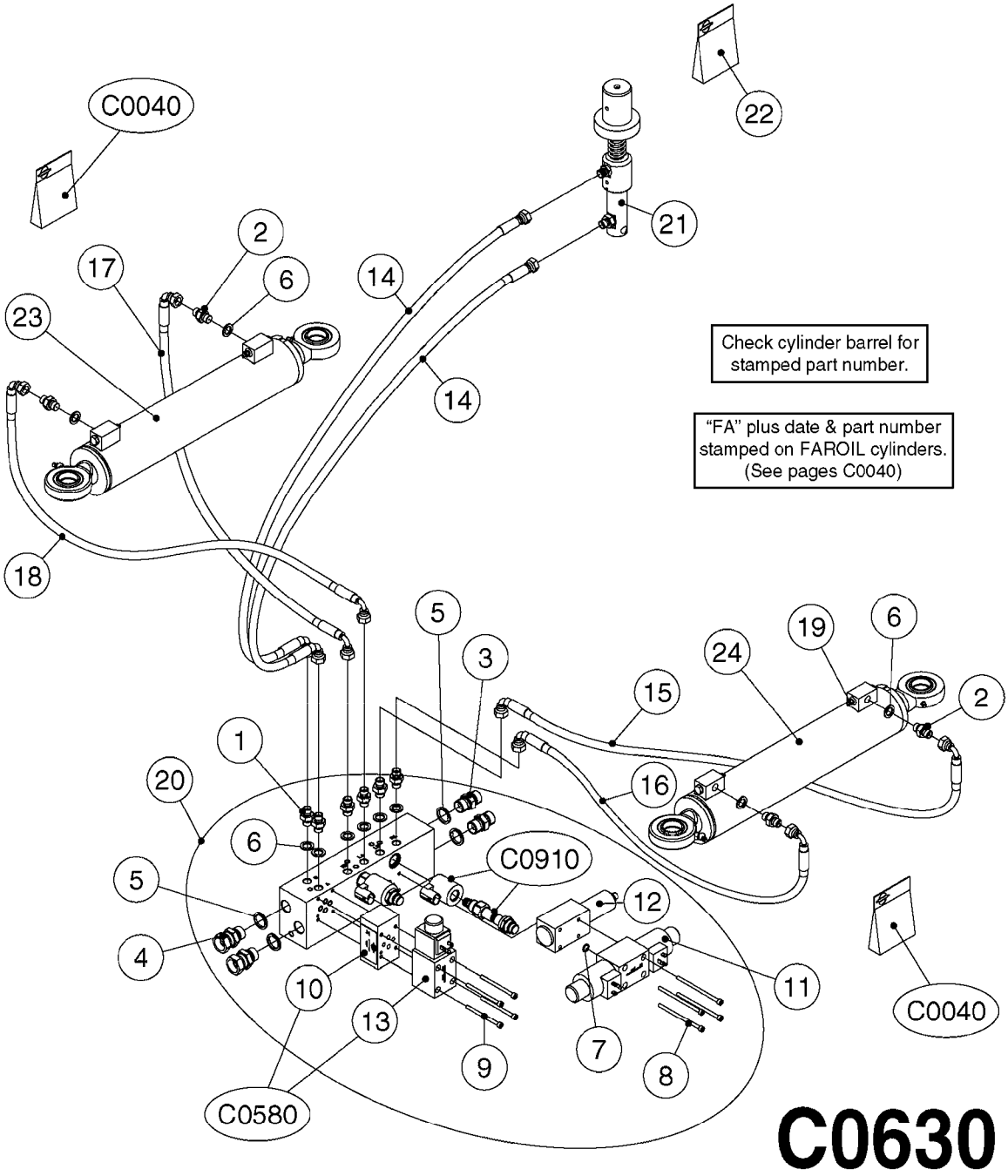

TRACK HYDRAULICS NCM 4400/6600
C0630-HIN, 14:05:19

Date 12.08.2020 11:36

Pos.	parts-n°	order qty	description
		1	
			BSP
1	146845	1	HEX NIPPLE 1/4"X1/4"
1	23234500	1	HEX NIPPLE 1/4" - 9/16"
			ORFS
2	146851	1	HEX NIPPLE 1/4"x1/4" 0.7MM
			BSP
2	23234700	1	HEX NIPPLE 1/4"-9/16" - 0.7mm
			ORFS
3	147132	1	HEX NIPPLE 1/2"X1/2" BSP DEL
			BSP
3	23235300	1	HEX NIPPLE 1/2"-13/16"
			ORFS
4	232289	1	NIPPLE 1/2" W. 1/2" UNION DEL
			BSP
4	23242000	1	HYD NIPPLE 1/2 X 13/16 SWIVEL
			ORFS
5	241356	1	DOWTYSEAL 1/2"
6	241404	1	DOWTY SEAL 1/4"
7	242102	1	O-RING Ø9.25X1.78 NITRIL 90SH
8	450952	1	SCREW M5 X 90 10.9
9	450965	1	SCREW ROUND M5X70
10	782146	1	HYD. CHECK VALVE 1 WAY
11	782151	1	MAGNET V PLUG DSE3-C26/10N-D12
12	782152	1	2 WAY MODULAR COMPENSATOR
13	782829	1	SOLENOID MD1L-TA/10N-D12K1/DT
14	784005	1	HOSE HY X 1/4 X 037.38"STR+ELB
			BSP
14	78515500	1	HY.HO.1/4"L= 950
			90°-45° A=180
			ORFS
15	784155	1	HOSE HY 1/4 X 17" ELB+ELB 90°
			BSP
15	78509300	1	HYD HOSE ORFS 4E-4-4E L=425 90 DEG
			ORFS
16	784156	1	HOSE HY 1/4 X 17" ELB+ELB 270°
			BSP
16	78509400	1	HYD HOSE ORFS 4E-4-4E L=455 270 DEG
			ORFS
17	784157	1	HOSE HY 1/4 X 32" ELB+ELB 90°
			BSP
17	78509500	1	HYD HOSE ORFS 4E-4-4E L=825 90 DEG
			ORFS
18	784158	1	HOSE HY 1/4 X 32" ELB+ELB 270°
			BSP
18	78509600	1	HY.HO.1/4"L= 825
			90°-90°A=270
			ORFS
19	28076000	1	BLEED SCREW M8
20	72290400	1	HYD. BLK COMP STEERING CM "05
21	72320300	1	HYD. CYL. STEERING LOCK CM "05
22	75074800	1	SEAL KIT 78123400/42
			SEAL KIT FOR 72320300 CYLINDER
23	78133900	1	DOB.CYL.Ø70/40-322 TRACK RIGHT '15
			CM4400 (REPLACES 78125100)
23	78134100	1	DOB.CYL.D70/40-270 TRACK RIGHT CM
			CM66/55/7000 (REPLACES 78124100)
24	78134000	1	DOB.CYL.Ø70/40-322 TRACK LEFT '15
			CM4400 (REPLACES 78123300)
24	78134200	1	DOB.CYL.D70/40-270 TRACK LEFT CM
			CM66/55/7000 (REPLACES 78125300)

HYD EAGLE HZ SPC 80'-100'
C0640-HIN, 22:08:17

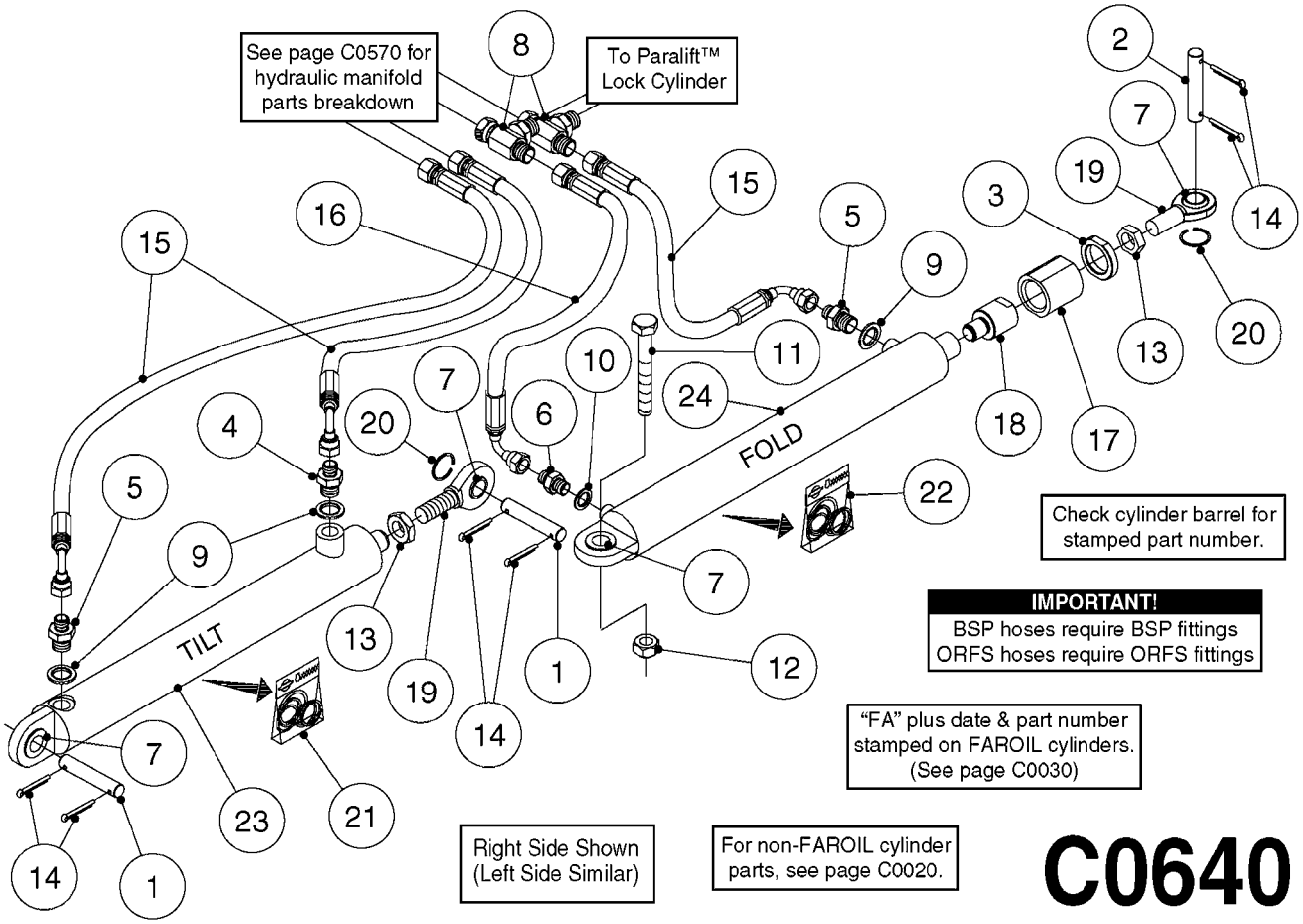

C0640

Agroparts: www.HARDI-INTERNATIONAL.com

HYD EAGLE HZ SPC 80'-100'
C0640-HIN, 22:08:17

Date 12.08.2020 11:36

Pos.	parts-n°	order qty	description
1	146450	1	PIN D19.8 X 75 WITH 2 X D5
2	146589	1	PIN D19.8 X 65
3	146672	1	NUT HEX LOCK F.ADJUSTER
4	146835	1	HEX NIPPLE 1/4" - 3/8" BSP BSP
4	23235700	1	HEX NIPPLE 3/8"-9/16" ORFS
5	146839	1	HEX NIPPLE 1/4"X3/8" BSP 0.7MM BSP
5	23235800	1	HEX NIPPLE 3/8"-9/16" - 0.7mm ORFS
6	146845	1	HEX NIPPLE 1/4"X1/4" BSP
6	23234500	1	HEX NIPPLE 1/4" - 9/16" ORFS
7	210730	1	BEARING F.LINK HEAD M20
8	232109	1	FITT.HY TEE 1/4"BSP UNION BSP
8	23241000	1	TEE 9/16"M-9/16"M-9/16"F ORFS ORFS
9	240866	1	DOWTYSEAL 3/8"
10	241404	1	DOWTY SEAL 1/4"
11	430910	1	BOLT HEX 8.8 DEL M20X110
12	460806	1	NUT HEX M20X2.50 LOCK DIN985A2 SS
13	461200	1	NUT HEX M20X1.5 JAMB.
14	480384	1	PIN COTTER 3/16 x 1-1/2"
15	784008	1	HOSE HY X 1/4" X 98.4"STR+ELB BSP
15	78500800	1	HY.HO.1/4"L= 2500 STR-90° ORFS
16	784025	1	HOSE HY X 1/4" x 86.6"STR+ELB BSP
16	78502100	1	HY.HO.1/4"L= 2200 STR-90° ORFS
17	14023000	1	BUSHING Ø50.0/36.0 L=52 DEL
18	14031800	1	ADAPTOR F.HY CYLINDER L=40
19	21092000	1	LINK HEAD M20 x D20 L=78 DELTA
20	48000603	1	SNAP RING, Ø36X1.5 F.210730
21	75074400	1	SEAL KIT 78121800/21/44
22	75074600	1	SEAL KIT 78120500/49
23	78122100	1	CYLINDER DOUBLE D50/25-298
24	78128000	1	CYLINDER DOUB. D60/30 L=300 09

HYDRAULICS FORCE 80'-100'
(PRE '06)
C0650-HIN, 17:11:17

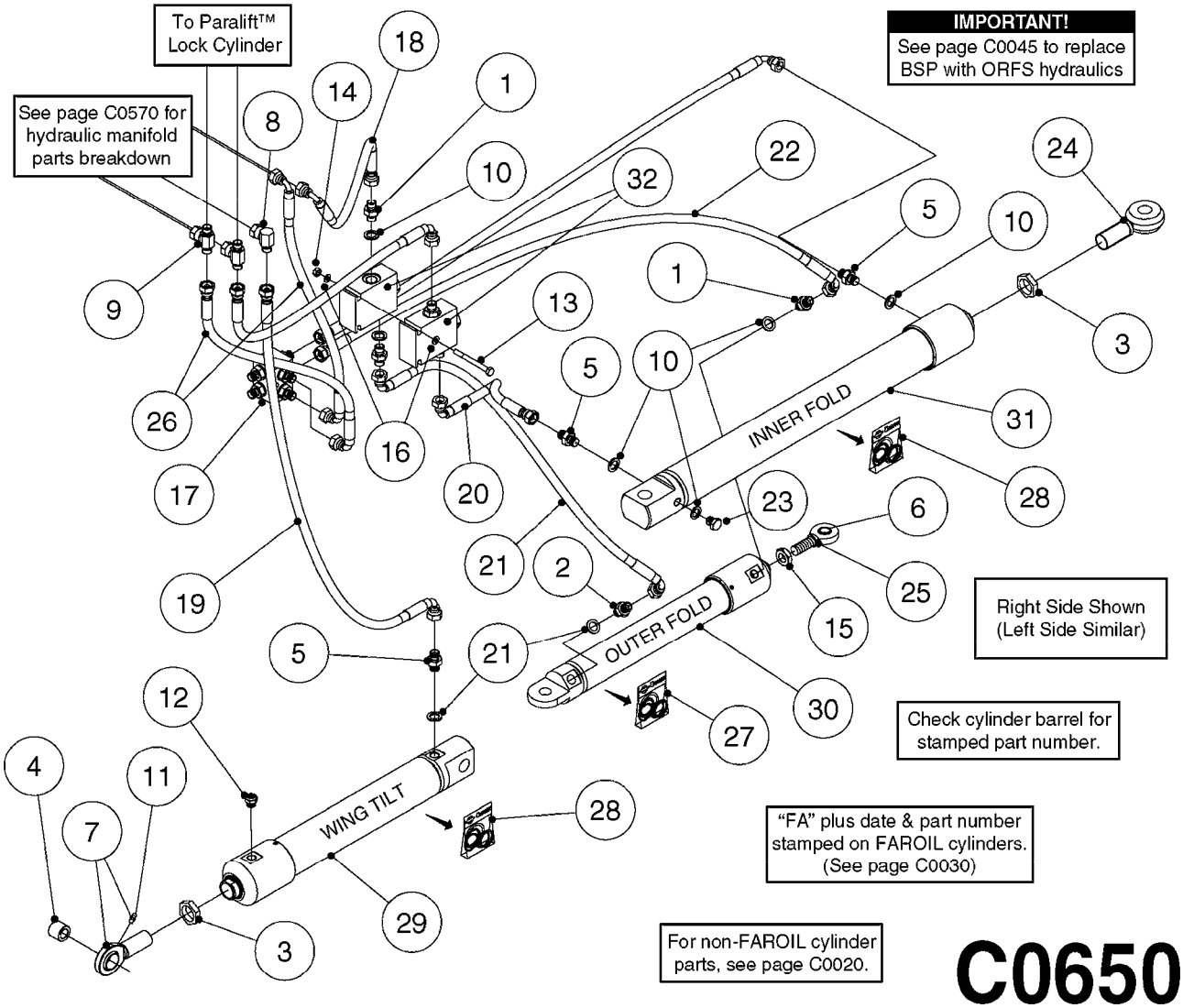

C0650

Agroparts: www.HARDI-INTERNATIONAL.com

HYDRAULICS FORCE 80'-100'
(PRE '06)
C0650-HIN, 17:11:17

Date 12.08.2020 11:36

Pos.	parts-nº	order qty	description
1	146845	1	HEX NIPPLE 1/4"X1/4"
2	146851	1	HEX NIPPLE 1/4"x1/4" 0.7MM
3	147128	1	NUT M24X2 NV-32
4	147130	1	BUSHING D25/20 20MM
5	147498	1	HEX NIPPLE 1/4"-1/4" 1.2mm
6	210728	1	BEARING F.LINK HEAD M17
7	210878	1	LINK HEAD M24 x 55 W/ GREASE NIP. DELTA
8	232060	1	HY.ELBOW 1/4" BSP SWIVEL
9	232175	1	TEE 1/4"M X 1/4"F X 1/4"M BSP
10	241404	1	DOWTY SEAL 1/4"
11	283699	1	GREASE NIPPLE M6X1
12	284265	1	PLUG BREATHER 1/4" F/CYLINDER
13	410605	1	BOLT HEX 8.8 DEL M6X80
14	460261	1	NUT HEX M6X1.00 LOCK DIN985 A2 SS
15	461198	1	NUT HEX M16X2 JAMB
16	471125	1	WASHER M6U 6.4X14X1.2,A2 SS
17	731941	1	HYD. BLOCK MANIFOLD
18	784005	1	HOSE HY X 1/4 X 037.38"STR+ELB
19	784010	1	HOSE HY X 1/4 X 149.5"STR+ELB
20	784031	1	HYD.HOSE CM TF 1/4"x550MM
21	784094	1	HOSE HY X 1/4 X 248.0" ELB+ELB 80' BOOM
21	784127	1	HOSE HY X 1/4 X 285.5" ELB+ELB
22	784128	1	HOSE HY X 1/4 X 259.85"STR+ELB 80' BOOM
22	784129	1	HOSE HY X 1/4 X 299.21"STR+ELB 90' BOOM
23	14010400	1	PLUG 1/4" BSP
24	14082300	1	LINK EYE Ø20/M24X2 L=87.5
25	21091900	1	LINK HEAD M16 x D17 DELTA
26	28376503	1	HOSE HY X1/4X047.25"STR+ELB
27	75074300	1	SEALKIT78122000/23-25/30-32/46
28	75075200	1	SEAL KIT 78120900/14/50
29	78121400	1	DOUBLE CYLINDER D 50/30-300
30	78122400	1	DOUBLE CYLINDER D 40/20-300
31	78128800	1	CYLINDER, D50/30-500
32	78219600	1	FLOW DIVIDER FTZ '13

HYDRAULICS FORCE 80'-100'
(POST '06)
C0651-HIN, 09:01:18

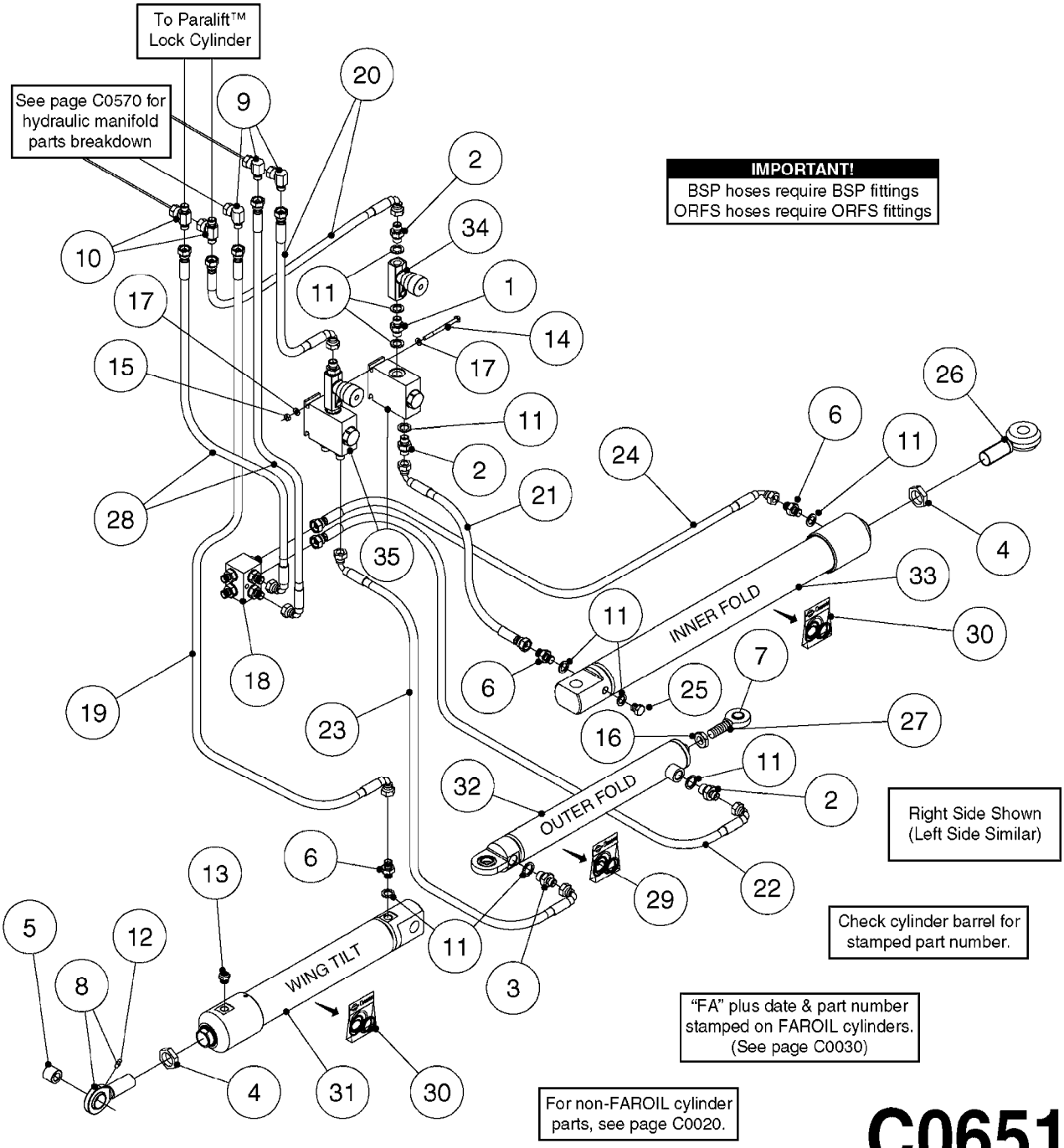

HYDRAULICS FORCE 80'-100'
(POST '06)
C0651-HIN, 09:01:18

Date 12.08.2020 11:36

Pos.	parts-n°	order qty	description
1	146845	1	HEX NIPPLE 1/4"X1/4"
2	146845	1	HEX NIPPLE 1/4"X1/4" BSP
2	23234500	1	HEX NIPPLE 1/4" - 9/16" ORFS
3	146851	1	HEX NIPPLE 1/4"x1/4" 0.7MM BSP
3	23234700	1	HEX NIPPLE 1/4"-9/16" - 0.7mm ORFS
4	147128	1	NUT M24X2 NV-32
5	147130	1	BUSHING D25/20 20MM
6	147498	1	HEX NIPPLE 1/4"-1/4" 1.2mm BSP
6	23234100	1	HEX NIPPLE 1/4"-9/16" - 1.2mm ORFS
7	210728	1	BEARING F.LINK HEAD M17
8	210878	1	LINK HEAD M24 x 55 W/ GREASE NIP. DELTA
9	232060	1	HY.ELBOW 1/4" BSP SWIVEL BSP
9	23240900	1	HYD.FIT. M-F 90° 9/16"-9/16" ORFS
10	232175	1	TEE 1/4"M X 1/4"F X 1/4"M BSP BSP
10	23241300	1	TEE 9/16"M-9/16"F-9/16"M ORFS ORFS
11	241404	1	DOWTY SEAL 1/4"
12	283699	1	GREASE NIPPLE M6X1
13	284265	1	PLUG BREATHER 1/4" F/CYLINDER
14	410605	1	BOLT HEX 8.8 DEL M6X80
15	460261	1	NUT HEX M6X1.00 LOCK DIN985 A2 SS
16	461198	1	NUT HEX M16X2 JAMB
17	471125	1	WASHER M6U 6.4X14X1.2,A2 SS
18	731941	1	HYD. BLOCK MANIFOLD
19	784010	1	HOSE HY X 1/4 X 149.5"STR+ELB BSP
19	78500900	1	HY.HO.1/4"L= 3800 STR-90° ORFS
20	784023	1	HOSE HY 1/4 X 43.25" STR.+ELB. BSP
20	78501900	1	HY.HO.1/4"L= 1100 STR-90° ORFS
21	784031	1	HYD.HOSE CM TF 1/4"x550MM BSP
21	78502500	1	HY.HO.1/4"L= 550 STR-90° ORFS
22	784128	1	HOSE HY X 1/4 X 259.85"STR+ELB 80' BOOM (BSP)
22	78507800	1	HY.HO.1/4"L= 6860 STR-90° 80' BOOM (ORFS)
22	784129	1	HOSE HY X 1/4 X 299.21"STR+ELB 90' BOOM (BSP)
22	78507900	1	HY.HO.1/4"L= 7900 STR-90° 90' BOOM (ORFS)
22	784048	1	HOSE HY X 1/4 X 315.0" STR+ELB 100' BOOM (BSP)

Pos.	parts-n°	order qty	description
22	78503600	1	HY.HO.1/4"L= 8320 STR-90° 100' BOOM (ORFS)
23	784094	1	HOSE HY X 1/4 X 248.0" ELB+ELB 80' BOOM (BSP)
23	78506000	1	HY.HO.1/4"L= 6550 90°-90° A=0 80' BOOM (ORFS)
23	784127	1	HOSE HY X 1/4 X 285.5" ELB+ELB 90' BOOM (BSP)
23	78507700	1	HY.HO.1/4"L= 7540 90°-90° A=0 90' BOOM (ORFS)
23	784120	1	HY.HO.1/4"L= 7550 100' BOOM (BSP)
23	78507200	1	HY.HO.1/4"L= 7850 90°-90° A=0 100' BOOM (ORFS)
24	784122	1	HY.HO.1/4"L= 900 STR-90° BSP
24	78507400	1	HY.HO.1/4"L= 900 STR-90° ORFS
25	14010400	1	PLUG 1/4" BSP
26	14082300	1	LINK EYE Ø20/M24X2 L=87.5
27	21091900	1	LINK HEAD M16 x D17 DELTA
28	28376503	1	HOSE HY X1/4X047.25"STR+ELB BSP
28	78500300	1	HY.HO.1/4"L= 1200 STR-90° ORFS
29	75074300	1	SEALKIT78122000/23-25/30-32/46
30	75075200	1	SEAL KIT 78120900/14/50
31	78121400	1	DOUBLE CYLINDER D 50/30-300
32	78122400	1	DOUBLE CYLINDER D 40/20-300
33	78128800	1	CYLINDER, D50/30-500
34	78215700	1	HYD. NEEDLE VALVE W/LOCK RD-7
35	78219600	1	FLOW DIVIDER FTZ '13

HYDRAULICS FORCE 120'-132'
(PRE '06)
C0660-HIN, 17:11:17

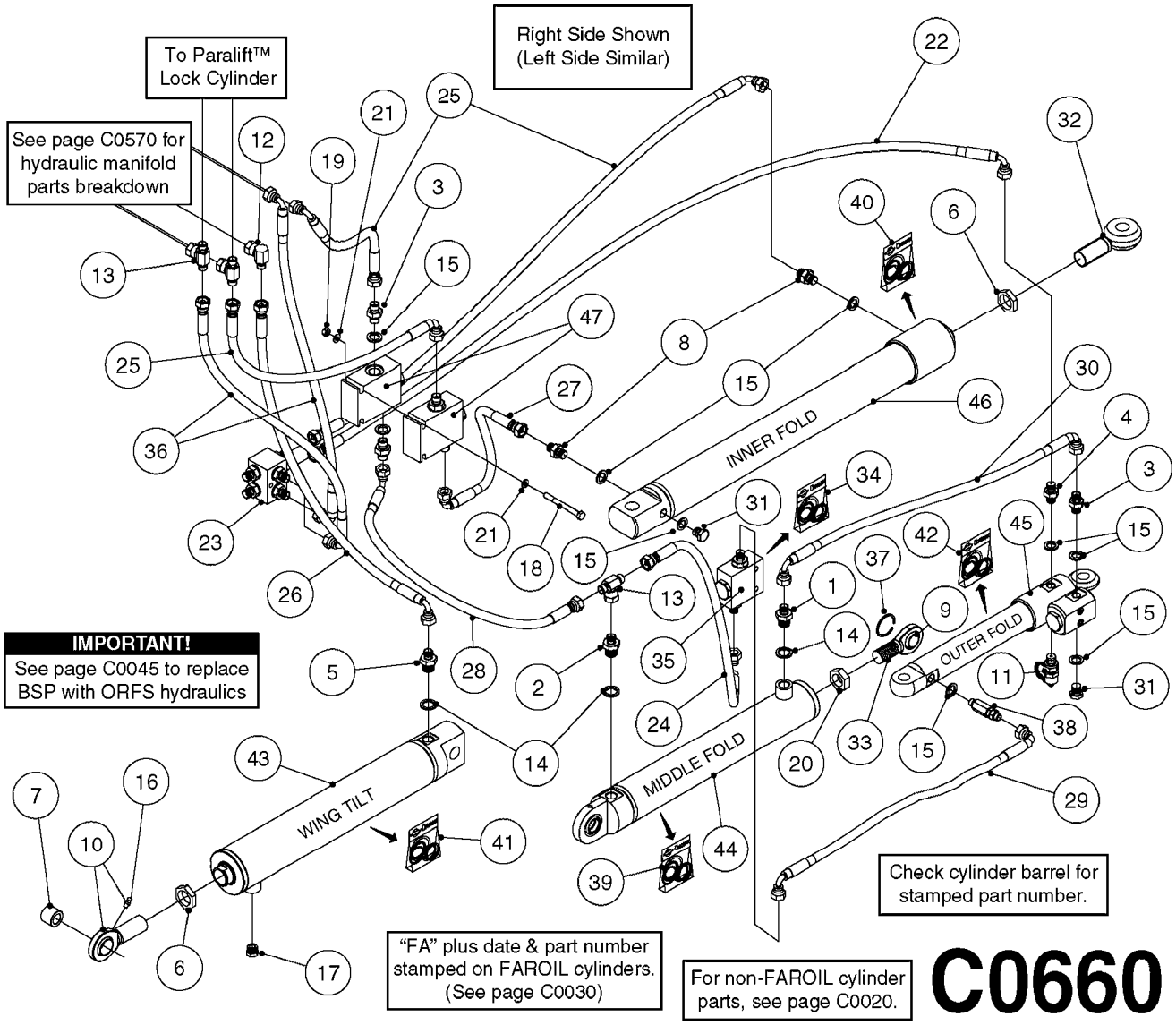

C0660

Agroparts: www.HARDI-INTERNATIONAL.com

HYDRAULICS FORCE 120'-132'
(PRE '06)
C0660-HIN, 17:11:17

Date 12.08.2020 11:36

Pos.	parts-nº	order qty	description
1	146835	1	HEX NIPPLE 1/4" - 3/8" BSP
2	146839	1	HEX NIPPLE 1/4"X3/8" BSP 0.7MM
3	146845	1	HEX NIPPLE 1/4"X1/4"
4	146851	1	HEX NIPPLE 1/4"x1/4" 0.7MM
5	147061	1	HEX NIPPLE 1/4"X3/8"/1.8
6	147128	1	NUT M24X2 NV-32
7	147130	1	BUSHING D25/20 20MM
8	147498	1	HEX NIPPLE 1/4"-1/4" 1.2mm
9	210730	1	BEARING F.LINK HEAD M20
10	210878	1	LINK HEAD M24 x 55 W/ GREASE NIP. DELTA
11	231955	1	NIPPLE F. PRESS GAUGE 1/4" BSP
12	232060	1	HY.ELBOW 1/4" BSP SWIVEL
13	232175	1	TEE 1/4"M X 1/4"F X 1/4"M BSP
14	240866	1	DOWTYSEAL 3/8"
15	241404	1	DOWTY SEAL 1/4"
16	283699	1	GREASE NIPPLE M6X1
17	284266	1	PLUG BREATHER 3/8" F/CYLINDER
18	410605	1	BOLT HEX 8.8 DEL M6X80
19	460261	1	NUT HEX M6X1.00 LOCK DIN985 A2 SS
20	461200	1	NUT HEX M20X1.5 JAMB.
21	471125	1	WASHER M6U 6.4X14X1.2,A2 SS
22	724132	1	HOSE HY X 1/4 STR+ELB 100' BOOM
22	724133	1	HOSE HY X 1/4 STR+ELB 110' BOOM
22	784119	1	HOSE HY X 1/4 X 557.0"STR+ELB 120'/132' BOOM
23	731941	1	HYD. BLOCK MANIFOLD
24	784004	1	HOSE HY 1/4" x 33.5" STR & ELB
25	784005	1	HOSE HY X 1/4 X 037.38"STR+ELB
26	784010	1	HOSE HY X 1/4 X 149.5"STR+ELB
27	784031	1	HYD.HOSE CM TF 1/4"x550MM
28	784094	1	HOSE HY X 1/4 X 248.0" ELB+ELB 100' BOOM
28	784118	1	HOSE HY X 1/4 X 285.4" ELB+STR 110'-132' BOOM
29	784121	1	HOSE HY X 1/4 X 252.0" ELB+ELB 120'/132' BOOM
29	784131	1	HOSE HY X 1/4 X 202.75"ELB+ELB 100'/110' BOOM
30	784127	1	HOSE HY X 1/4 X 285.5" ELB+ELB 120'/132' BOOM
30	784130	1	HOSE HY X 1/4 X 236.25"ELB+ELB 100'/110' BOOM
31	14010400	1	PLUG 1/4" BSP
32	14082300	1	LINK EYE Ø20/M24X2 L=87.5
33	21092000	1	LINK HEAD M20 x D20 L=78 DELTA
34	28001800	1	REPAIR KIT F.ENDSTOP 1/4"
35	28028600	1	END STOP 1/4"
36	28376503	1	HOSE HY X1/4X047.25"STR+ELB
37	48000603	1	SNAP RING, Ø36X1.5 F.210730
38	72264600	1	HYDRUALIC RESTICTOR, ADJUSTABL
39	75074400	1	SEAL KIT 78121800/21/44
40	75075200	1	SEAL KIT 78120900/14/50
41	75075400	1	SEAL KIT 78120800
42	75076500	1	SEAL KIT 78126400
43	78120800	1	CYLINDER DOUBLE 60/30-300
44	78122100	1	CYLINDER DOUBLE D50/25-298
45	78126400	1	CYLINDER DBLE D32/16-200 W.STP
46	78128800	1	CYLINDER, D50/30-500
47	78219600	1	FLOW DIVIDER FTZ '13

HYDRAULICS FORCE 120'-132'
(POST '06)
C0661-HIN, 18:08:17

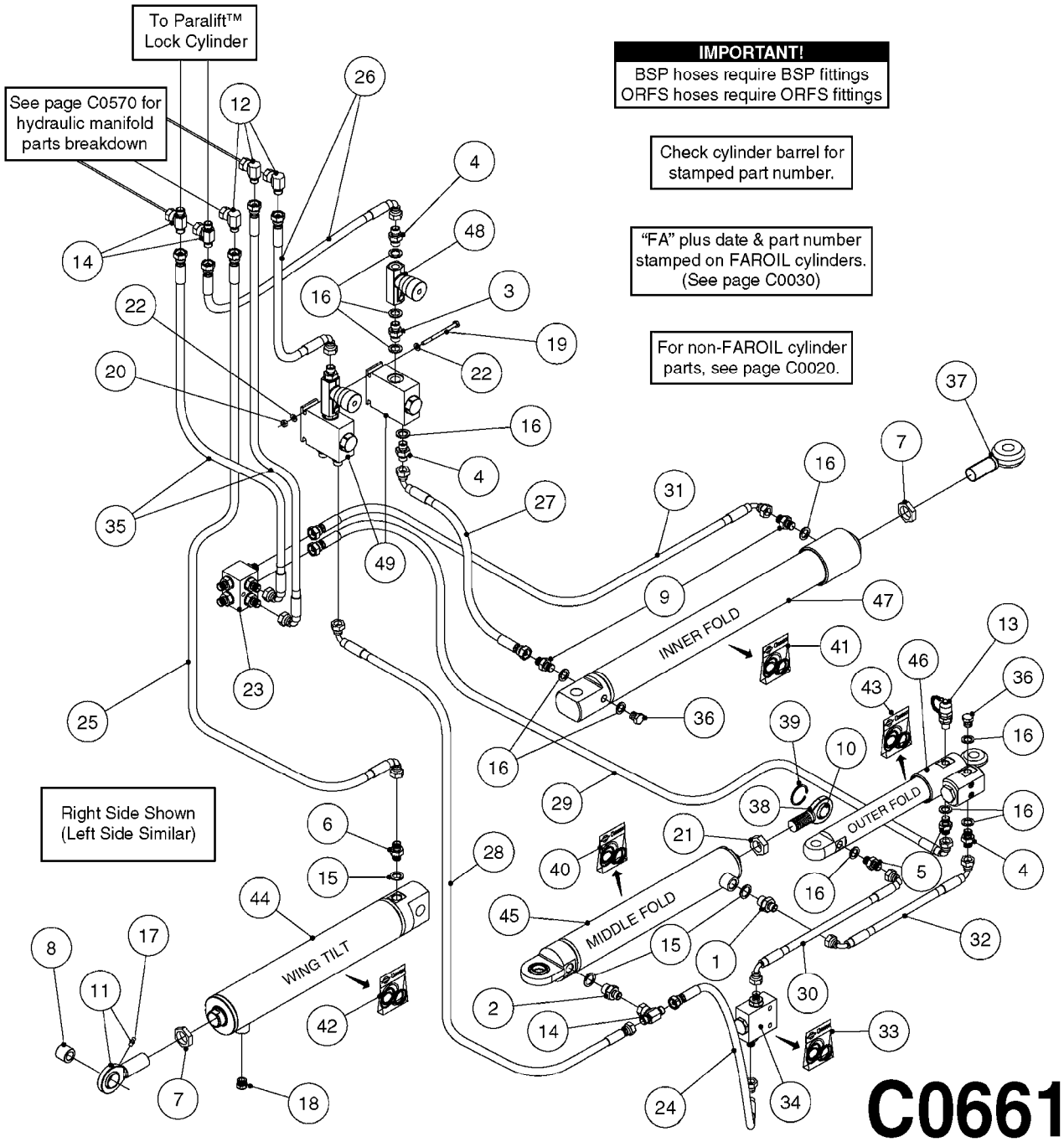

Agroparts: www.HARDI-INTERNATIONAL.com

HYDRAULICS FORCE 120'-132'
(POST '06)
C0661-HIN, 18:08:17

Date 12.08.2020 11:36

Pos.	parts-n°	order qty	description
1	146835	1	HEX NIPPLE 1/4" - 3/8" BSP BSP
1	23235700	1	HEX NIPPLE 3/8"-9/16" ORFS
2	146839	1	HEX NIPPLE 1/4"X3/8" BSP 0.7MM BSP
2	23235800	1	HEX NIPPLE 3/8"-9/16" - 0.7mm ORFS
3	146845	1	HEX NIPPLE 1/4"X1/4"
4	146845	1	HEX NIPPLE 1/4"X1/4" BSP
4	23234500	1	HEX NIPPLE 1/4" - 9/16" ORFS
5	146851	1	HEX NIPPLE 1/4"x1/4" 0.7MM BSP
5	23234700	1	HEX NIPPLE 1/4"-9/16" - 0.7mm ORFS
6	147061	1	HEX NIPPLE 1/4"X3/8"/1.8 BSP
6	23236200	1	HEX NIPPLE 3/8"-9/16" - 1.8mm ORFS
7	147128	1	NUT M24X2 NV-32
8	147130	1	BUSHING D25/20 20MM
9	147498	1	HEX NIPPLE 1/4"-1/4" 1.2mm BSP
9	23234100	1	HEX NIPPLE 1/4"-9/16" - 1.2mm ORFS
10	210730	1	BEARING F.LINK HEAD M20
11	210878	1	LINK HEAD M24 x 55 W/ GREASE NIP. DELTA
12	232060	1	HY.ELBOW 1/4" BSP SWIVEL BSP
12	23240900	1	HYD.FIT. M-F 90° 9/16"-9/16" ORFS
13	231955	1	NIPPLE F. PRESS GAUGE 1/4" BSP
14	232175	1	TEE 1/4"M X 1/4"F X 1/4"M BSP BSP
14	23241300	1	TEE 9/16"M-9/16"F-9/16"M ORFS ORFS
15	240866	1	DOWTYSEAL 3/8"
16	241404	1	DOWTY SEAL 1/4"
17	283699	1	GREASE NIPPLE M6X1
18	284266	1	PLUG BREATHER 3/8" F/CYLINDER
19	410605	1	BOLT HEX 8.8 DEL M6X80
20	460261	1	NUT HEX M6X1.00 LOCK DIN985 A2 SS
21	461200	1	NUT HEX M20X1.5 JAMB.
22	471125	1	WASHER M6U 6.4X14X1.2,A2 SS
23	731941	1	HYD. BLOCK MANIFOLD
24	784004	1	HOSE HY 1/4" x 33.5" STR & ELB BSP
24	78500500	1	HY. HO.1/4"L=850 STR-90° ORFS
25	784010	1	HOSE HY X 1/4 X 149.5"STR+ELB BSP
25	78500900	1	HY.HO.1/4"L= 3800 STR-90° ORFS
26	784023	1	HOSE HY 1/4 X 43.25" STR.+ELB. BSP

Pos.	parts-n°	order qty	description
26	78501900	1	HY.HO.1/4"L= 1100 STR-90° ORFS
27	784031	1	HYD.HOSE CM TF 1/4"x550MM BSP
27	78502500	1	HY.HO.1/4"L= 550 STR-90° ORFS
28	784118	1	HOSE HY X 1/4 X 285.4" ELB+STR BSP
28	78507000	1	HY.HO.1/4"L= 7540 STR-90° ORFS
29	784119	1	HOSE HY X 1/4 X 557.0"STR+ELB BSP
29	78507100	1	HY.HO.1/4"L=14580 STR-90° ORFS
30	784121	1	HOSE HY X 1/4 X 252.0" ELB+ELB BSP
30	78507300	1	HY.HO.1/4"L= 6660 90°-90° A=0 ORFS
31	784122	1	HY.HO.1/4"L= 900 STR-90° BSP
31	78507400	1	HY.HO.1/4"L= 900 STR-90° ORFS
32	784127	1	HOSE HY X 1/4 X 285.5" ELB+ELB BSP
32	78507700	1	HY.HO.1/4"L= 7540 90°-90° A=0 ORFS
33	28001800	1	REPAIR KIT F.ENDSTOP 1/4"
34	28028600	1	END STOP 1/4"
35	28376503	1	HOSE HY X1/4X047.25"STR+ELB BSP
35	78500300	1	HY.HO.1/4"L= 1200 STR-90° ORFS
36	14010400	1	PLUG 1/4" BSP
37	14082300	1	LINK EYE Ø20/M24X2 L=87.5
38	21092000	1	LINK HEAD M20 x D20 L=78 DELTA
39	48000603	1	SNAP RING, Ø36X1.5 F.210730
40	75074400	1	SEAL KIT 78121800/21/44
41	75075200	1	SEAL KIT 78120900/14/50
42	75075400	1	SEAL KIT 78120800
43	75076500	1	SEAL KIT 78126400
44	78120800	1	CYLINDER DOUBLE 60/30-300
45	78122100	1	CYLINDER DOUBLE D50/25-298
46	78126400	1	CYLINDER DBLE D32/16-200 W.STP
47	78128800	1	CYLINDER, D50/30-500
48	78215700	1	HYD. NEEDLE VALVE W/LOCK RD-7
49	78219600	1	FLOW DIVIDER FTZ '13

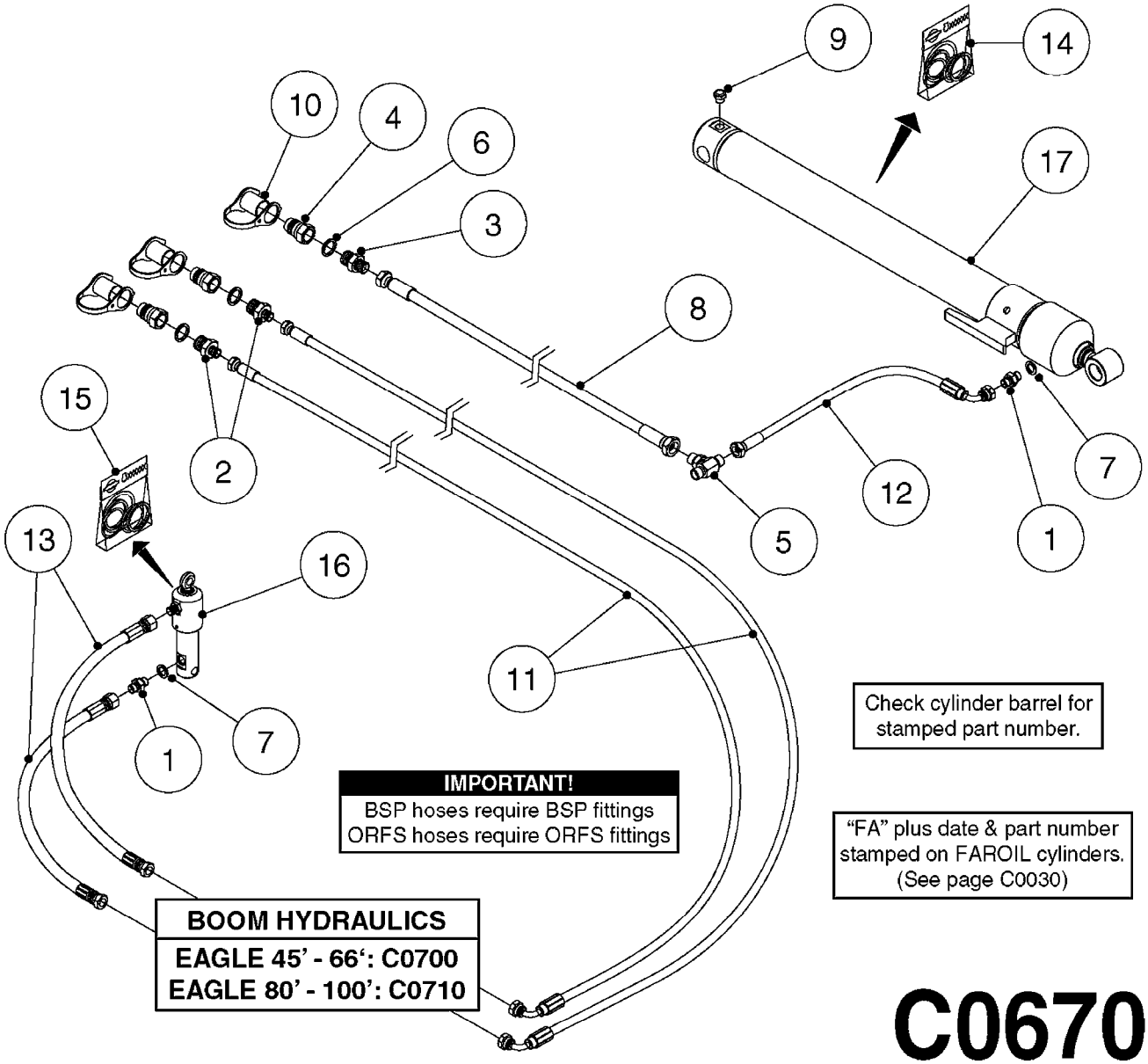

Check cylinder barrel for stamped part number.

IMPORTANT!
BSP hoses require BSP fittings
ORFS hoses require ORFS fittings

"FA" plus date & part number stamped on FAROIL cylinders. (See page C0030)

BOOM HYDRAULICS

EAGLE 45' - 66': C0700
EAGLE 80' - 100': C0710

C0670

Agroparts: www.HARDI-INTERNATIONAL.com

HYDRAULICS HY - NAV 3000/4000
C0670-HIN, 26:02:16

Date 12.08.2020 11:36

Pos.	parts-n°	order qty	description
1	146845	1	HEX NIPPLE 1/4"X1/4" BSP
1	23234500	1	HEX NIPPLE 1/4" - 9/16" ORFS
2	146846	1	HEX NIPPLE 1/2" X 1/4" BSP
2	23234800	1	HEX NIPPLE 1/2"-9/16" ORFS
3	146847	1	HEX NIPPLE 1/2"X3/8" BSP
3	23234900	1	HEX NIPPLE 1/2"-11/16" ORFS
4	230311	1	QUICK COUPLING 1/2"
5	232057	1	T-PIECE 3/8" BSP HY. BSP
5	23240800	1	TEE 11/16"-11/16"-11/16" ORFS ORFS
6	241356	1	DOWTYSEAL 1/2"
7	241404	1	DOWTY SEAL 1/4"
8	284141	1	HYD HOSE 3/8" L=6000 STR.+STR BSP
8	78563000	1	HY.HO.3/8"L= 6150 STR-STR ORFS
9	284265	1	PLUG BREATHER 1/4" F/CYLINDER
10	334206	1	DUST HOOD FOR HY-COUPLING
11	784056	1	HOSE HY X 1/4 X 394.00'STR+ELB BSP
11	78504000	1	HY.HO.1/4"L=10000 STR-90° ORFS
12	784151	1	HOSE HY 1/4 3/8 OML X 79" S+E HOSE FOR RIGHT SIDE (BSP)
12	78508900	1	HY.HO.1/4"L= 2000 3/8STR-90° HOSE FOR RIGHT SIDE (ORFS)
12	784152	1	HOSE HY 1/4 3/8 OML X 106" S+E HOSE FOR LEFT SIDE (BSP)
12	78509000	1	HY.HO.1/4"L= 2700 3/8STR-90° HOSE FOR LEFT SIDE (ORFS)
13	784161	1	HOSE HY X 1/4 X 59" STR+STR BSP
13	78509900	1	HY.HO.1/4"L= 1500 STR-STR ORFS
14	28117300	1	SEAL KIT 78120600/07/43
15	75074800	1	SEAL KIT 78123400/42 SEAL KIT FOR 78100203 CYLINDER
16	78100203	1	CYL. D25/12-50/72531000 W/BSP ADAPT
17	78120600	1	CYLINDER 60/25 X 662 NAV PAR L CYLINDER FOR LEFT SIDE
17	78125500	1	CYLINDER 60/25 X 662 NAV PAR R CYLINDER FOR RIGHT SIDE

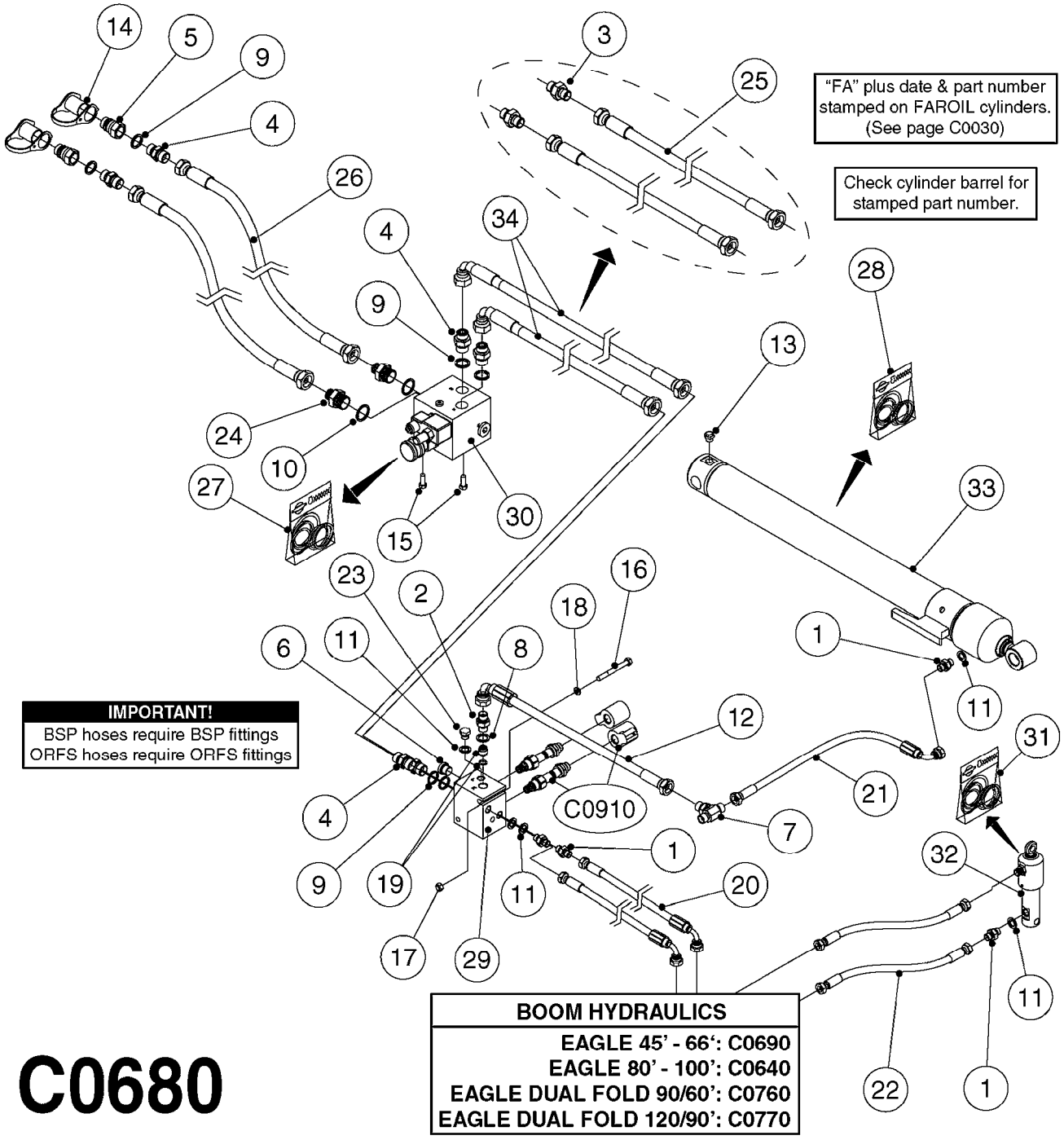
"FA" plus date & part number stamped on FAROIL cylinders. (See page C0030)
Check cylinder barrel for stamped part number.
IMPORTANT!
BSP hoses require BSP fittings
ORFS hoses require ORFS fittings
C0910
BOOM HYDRAULICS
EAGLE 45' - 66': C0690
EAGLE 80' - 100': C0640
EAGLE DUAL FOLD 90/60': C0760
EAGLE DUAL FOLD 120/90': C0770

C0680

Agroparts: www.HARDI-INTERNATIONAL.com

HYDRAULICS HZ - NAV 3000/4000
C0680-HIN, 15:07:19

Date 12.08.2020 11:36

Pos.	parts-n°	order qty	description
1	146845	1	HEX NIPPLE 1/4"X1/4" BSP
1	23234500	1	HEX NIPPLE 1/4" - 9/16" ORFS
2	146850	1	HEX NIPPLE 3/8"x3/8" - 1.8mm BSP
2	23234600	1	HEX NIPPLE 3/8"-11/16" - 1.8mm ORFS
3	147132	1	HEX NIPPLE 1/2"X1/2" BSP DEL BSP
3	23232400	1	HEX NIPPLE 13/16"-13/16" ORFS
4	147132	1	HEX NIPPLE 1/2"X1/2" BSP DEL BSP
4	23235300	1	HEX NIPPLE 1/2"-13/16" ORFS
5	230311	1	QUICK COUPLING 1/2"
6	231924	1	PLUG 3/8'
7	232057	1	T-PIECE 3/8" BSP HY. BSP
7	23240800	1	TEE 11/16"-11/16"-11/16" ORFS ORFS
8	240866	1	DOWTYSEAL 3/8"
9	241356	1	DOWTYSEAL 1/2"
10	241367	1	DOWTYSEAL 28.5x22
11	241404	1	DOWTY SEAL 1/4"
12	284020	1	HOSE HY X 3/8" X 35.4" STR+ELB BSP
12	78560100	1	HY.HO.3/8"L= 900 STR-90° ORFS
13	284265	1	PLUG BREATHER 1/4" F/CYLINDER
14	334206	1	DUST HOOD FOR HY-COUPLING
15	420582	1	BOLT HEX 8.8 DEL M8X20 FT A2
16	421255	1	BOLT HEX 8.8 SS M8X75
17	460143	1	LOCK NUT M8 SST A2 DIN985
18	471126	1	WASHER, M8, Ø16/ 8.4X 1.6, SS
19	782062	1	NON-RETURN VALVE UTV 3/8"
20	784068	1	HYD HOSE 1/4" L=4700 STR.+ELB BSP
20	78504900	1	HY.HO.1/4"L= 4700 STR-90° ORFS
21	784151	1	HOSE HY 1/4 3/8 OML X 79" S+E HOSE FOR RIGHT SIDE (BSP)
21	78508900	1	HY.HO.1/4"L= 2000 3/8STR-90° HOSE FOR RIGHT SIDE (ORFS)
21	784152	1	HOSE HY 1/4 3/8 OML X 106" S+E HOSE FOR LEFT SIDE (BSP)
21	78509000	1	HY.HO.1/4"L= 2700 3/8STR-90° HOSE FOR LEFT SIDE (ORFS)
22	784161	1	HOSE HY X 1/4 X 59" STR+STR BSP
22	78509900	1	HY.HO.1/4"L= 1500 STR-STR ORFS
23	14010400	1	PLUG 1/4" BSP

Pos.	parts-n°	order qty	description
24	23235100	1	HEX NIPPLE 3/4"-13/16"
25	28028300	1	HYD HOSE 1/2" L=1650 STR.+STR BSP (PRE-2015)
25	78570000	1	HYDR. HOSE 1/2"L= 1650 STR-STR ORFS (PRE-2015)
26	28052100	1	HOSE HY X 1/2" X 122.0"STR+STR BSP
26	78570500	1	HY.HO.1/2"L= 3100 STR-STR ORFS
27	28061400	1	SEAL KIT F. 782145
28	28117300	1	SEAL KIT 78120600/07/43
29	70078103	1	HYD. BLOCK COMP. PARA-LIFT 1.8
30	72809100	1	BYPASS BLOCK 782145
31	75074800	1	SEAL KIT 78123400/42 SEAL KIT FOR 78100203 CYLINDER
32	78100203	1	CYL. D25/12-50/72531000 W/BSP ADAPT
33	78120600	1	CYLINDER 60/25 X 662 NAV PAR L CYLINDER FOR LEFT SIDE
33	78125500	1	CYLINDER 60/25 X 662 NAV PAR R CYLINDER FOR RIGHT SIDE
34	78503303	1	HY.HO.1/2"L= 2000 STR-90

BASIC HYDRAULICS NAV 4500/6200
C0685-HIN, 11:07:19

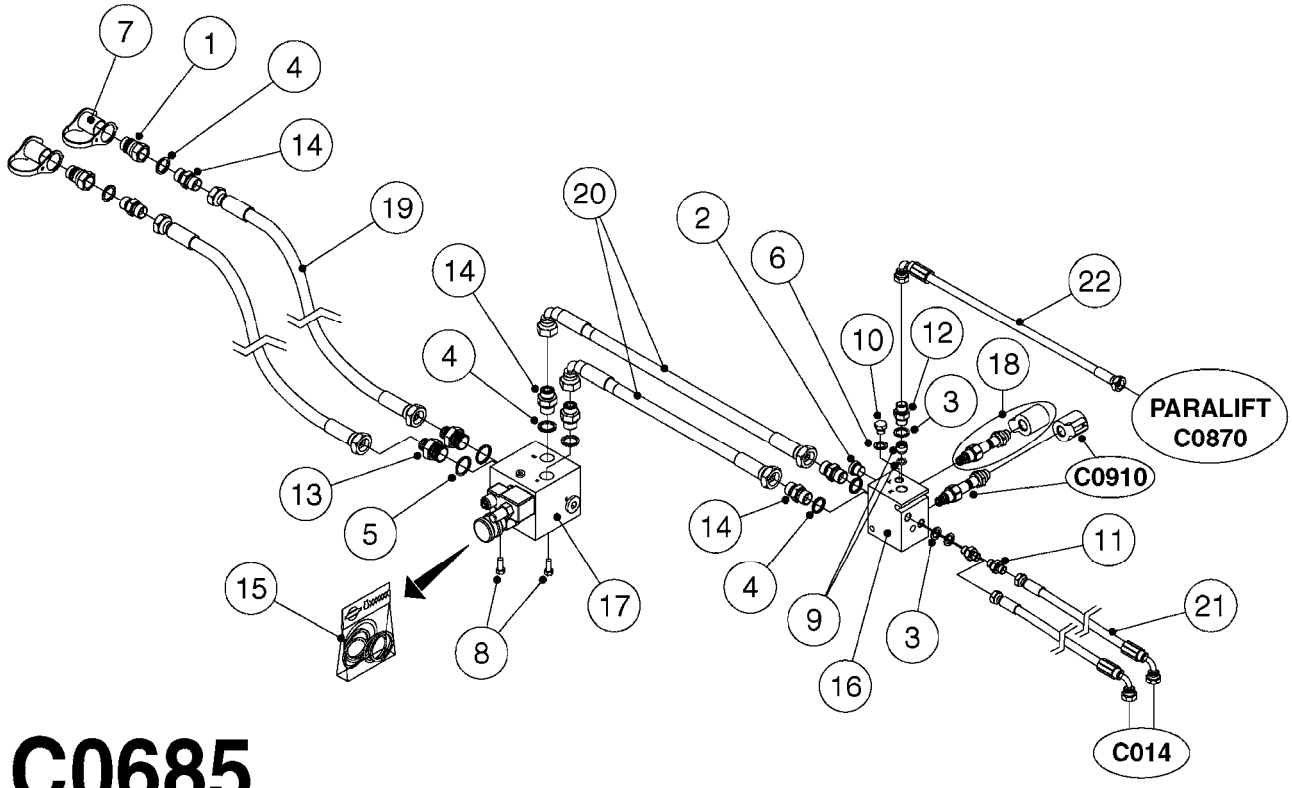

C0685

Agroparts: www.HARDI-INTERNATIONAL.com

BASIC HYDRAULICS NAV 4500/6200
C0685-HIN, 11:07:19

Date 12.08.2020 11:36

Pos.	parts-n°	order qty	description
1	230311	1	QUICK COUPLING 1/2"
2	231924	1	PLUG 3/8'
3	240866	1	DOWTYSEAL 3/8"
4	241356	1	DOWTYSEAL 1/2"
5	241367	1	DOWTYSEAL 28.5x22
6	241404	1	DOWTY SEAL 1/4"
7	334206	1	DUST HOOD FOR HY-COUPLING
8	420582	1	BOLT HEX 8.8 DEL M8X20 FT A2
9	782062	1	NON-RETURN VALVE UTV 3/8"
10	14010400	1	PLUG 1/4" BSP
11	23234300	1	HEX NIPPLE 3/8"-11/16"
12	23234600	1	HEX NIPPLE 3/8"-11/16" - 1.8mm
13	23235100	1	HEX NIPPLE 3/4"-13/16"
14	23235300	1	HEX NIPPLE 1/2"-13/16"
15	28061400	1	SEAL KIT F. 782145
16	70078103	1	HYD. BLOCK COMP. PARA-LIFT 1.8
17	72809100	1	BYPASS BLOCK 782145
18	75586600	1	SOLENOID VALVE NC, + COIL
19	78503103	1	HY.HO.1/2"L= 3350 STR-STR
20	78503303	1	HY.HO.1/2"L= 2000 STR-90
21	78503603	1	HY.HO.3/8"L= 4700 STR-90°
22	78560100	1	HY.HO.3/8"L= 900 STR-90°

HYD EAGLE HZ SPB 45'-66'
C0690-HIN, 09:01:18

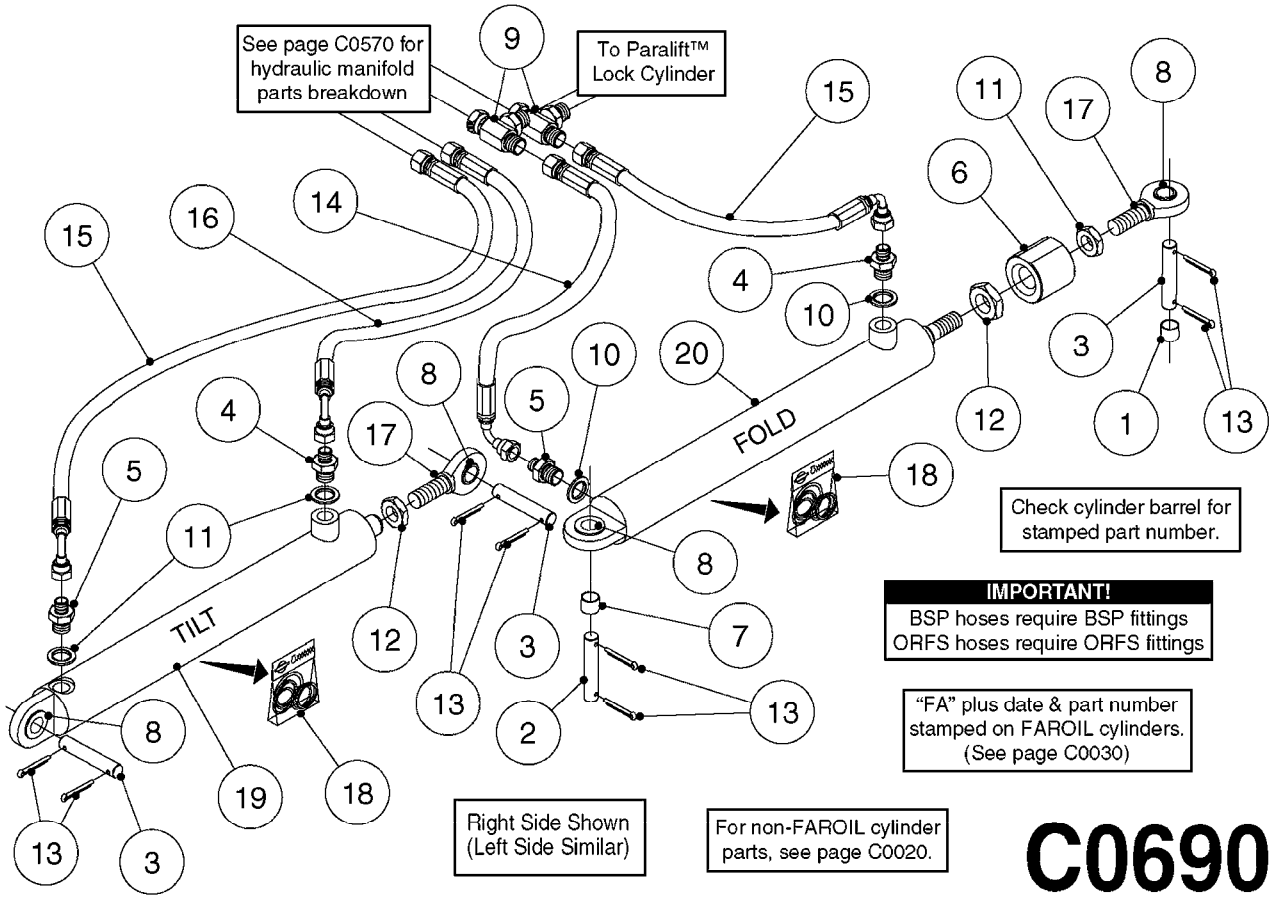

Agroparts: www.HARDI-INTERNATIONAL.com

HYD EAGLE HZ SPB 45'-66'
C0690-HIN, 09:01:18

Date 12.08.2020 11:36

Pos.	parts-n°	order qty	description
1	145912	1	BUSHING D19.8/D17.0X7MM
2	146324	1	SHAFT D16.8 L102/2 X 5
3	146587	1	PIN D16.8 X 65
4	146835	1	HEX NIPPLE 1/4" - 3/8" BSP BSP
4	23235700	1	HEX NIPPLE 3/8"-9/16" ORFS
5	146839	1	HEX NIPPLE 1/4"X3/8" BSP 0.7MM BSP
5	23235800	1	HEX NIPPLE 3/8"-9/16" - 0.7mm ORFS
6	146992	1	BUSHING F.CYLINDER
7	151872	1	BUSHING D22.0/18.0 10MM
8	210728	1	BEARING F.LINK HEAD M17
9	232109	1	FITT.HY TEE 1/4"BSP UNION BSP
9	23241000	1	TEE 9/16"M-9/16"M-9/16"F ORFS ORFS
10	240866	1	DOWTYSEAL 3/8"
11	461198	1	NUT HEX M16X2 JAMB
12	461249	1	NUT M22X1.5 DIN439B
13	480384	1	PIN COTTER 3/16 x 1-1/2"
14	784001	1	HOSE HY X 1/4 X 067.00"STR+ELB BSP
14	78500200	1	HY.HO.1/4"L= 1700 STR-90° ORFS
15	784019	1	HOSE HY X 1/4 X 078.75"STR+ELB BSP
15	78501500	1	HY.HO.1/4"L= 2000 STR-90° ORFS
16	784025	1	HOSE HY X 1/4" x 86.6"STR+ELB BSP
16	78502100	1	HY.HO.1/4"L= 2200 STR-90° ORFS
17	21091900	1	LINK HEAD M16 x D17 DELTA
18	75075000	1	SEAL KIT 78122600/27/28/29
19	78122700	1	CYLINDER D40/22X300MM RED
20	78122900	1	CYLINDER 40/22X300MM RED

HYD EAGLE HY SPB 45'-66'
C0700-HIN, 10:01:18

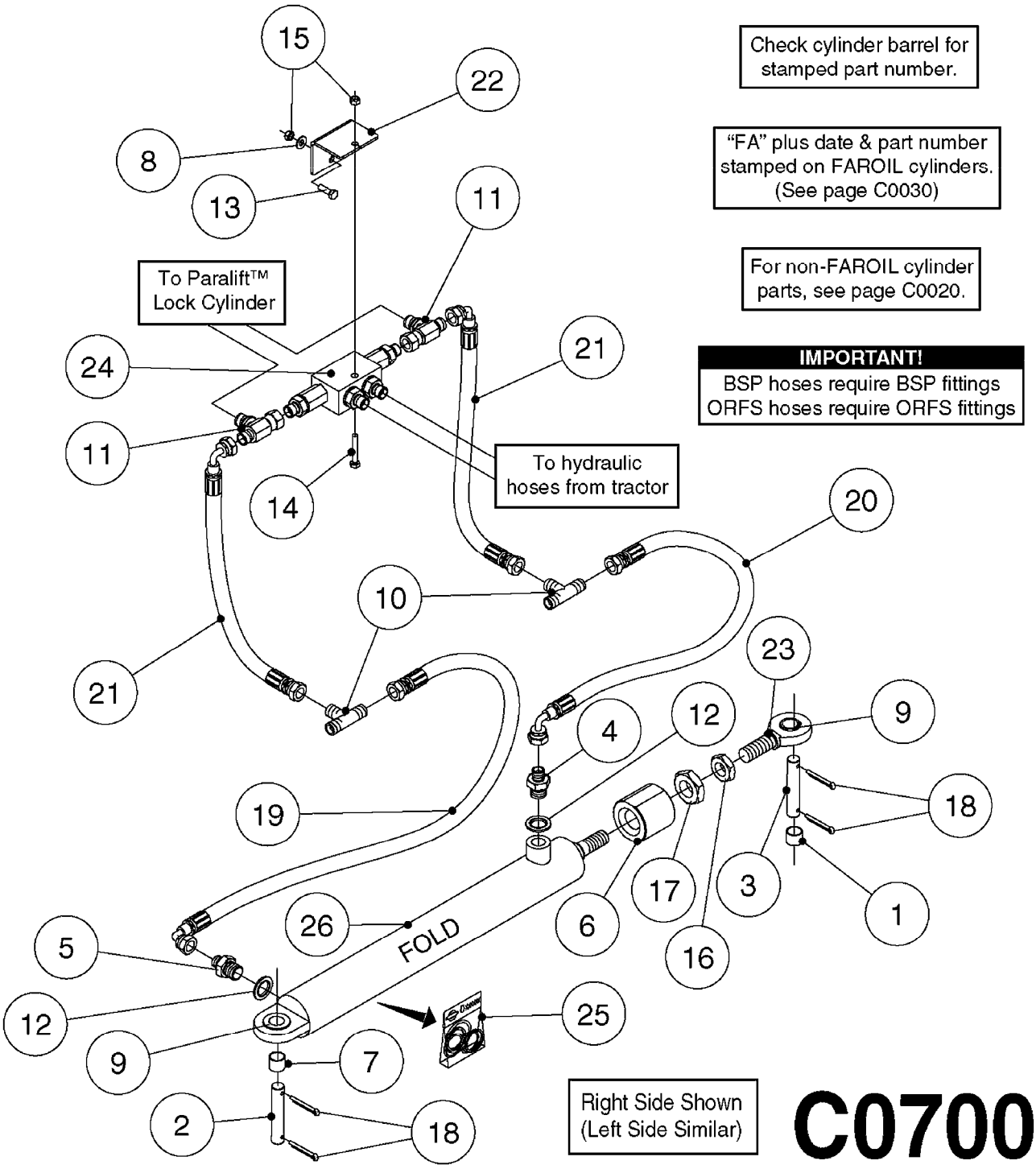

Check cylinder barrel for stamped part number.

"FA" plus date & part number stamped on FAROIL cylinders. (See page C0030)

For non-FAROIL cylinder parts, see page C0020.

IMPORTANT!
BSP hoses require BSP fittings
ORFS hoses require ORFS fittings

Agroparts: www.HARDI-INTERNATIONAL.com

HYD EAGLE HY SPB 45'-66'
C0700-HIN, 10:01:18

Date 12.08.2020 11:36

Pos.	parts-n°	order qty	description
1	145912	1	BUSHING D19.8/D17.0X7MM
2	146324	1	SHAFT D16.8 L102/2 X 5
3	146587	1	PIN D16.8 X 65
4	146835	1	HEX NIPPLE 1/4" - 3/8" BSP BSP
4	23235700	1	HEX NIPPLE 3/8"-9/16" ORFS
5	146839	1	HEX NIPPLE 1/4"X3/8" BSP 0.7MM BSP
5	23235800	1	HEX NIPPLE 3/8"-9/16" - 0.7mm ORFS
6	146992	1	BUSHING F.CYLINDER
7	151872	1	BUSHING D22.0/18.0 10MM
8	163936	1	WASHER D15/D6.2X1
9	210728	1	BEARING F.LINK HEAD M17
10	230963	1	TEE 1/4"M X 1/4"M X 1/4"M BSP BSP
10	23240400	1	TEE 9/16"-9/16"-9/16" ORFS ORFS
11	232109	1	FITT.HY TEE 1/4"BSP UNION BSP
11	23241000	1	TEE 9/16"M-9/16"M-9/16"F ORFS ORFS
12	240866	1	DOWTYSEAL 3/8"
13	410362	1	BOLT HEX 8.8 SS M6X20
14	410583	1	BOLT HEX 8.8 DEL M6X40
15	460261	1	NUT HEX M6X1.00 LOCK DIN985 A2 SS
16	461198	1	NUT HEX M16X2 JAMB
17	461249	1	NUT M22X1.5 DIN439B
18	480384	1	PIN COTTER 3/16 x 1-1/2"
19	784001	1	HOSE HY X 1/4 X 067.00"STR+ELB BSP
19	78500200	1	HY.HO.1/4"L= 1700 STR-90° ORFS
20	784019	1	HOSE HY X 1/4 X 078.75"STR+ELB BSP
20	78501500	1	HY.HO.1/4"L= 2000 STR-90° ORFS
21	784076	1	HOSE,HY,1/4" L=8.5" STR-ELB BSP
21	78505400	1	HY.HO.1/4"L= 215 STR-90° ORFS
22	16100400	1	PLATE 3 X 60 X 91 HY BLOCK MT
23	21091900	1	LINK HEAD M16 x D17 DELTA
24	72256500	1	DOUB.PILOT STEERED COUNT.VALVE
25	75075000	1	SEAL KIT 78122600/27/28/29
26	78122900	1	CYLINDER 40/22X300MM RED

HYD EAGLE HY SPC 80'-100'
C0710-HIN, 27:09:17

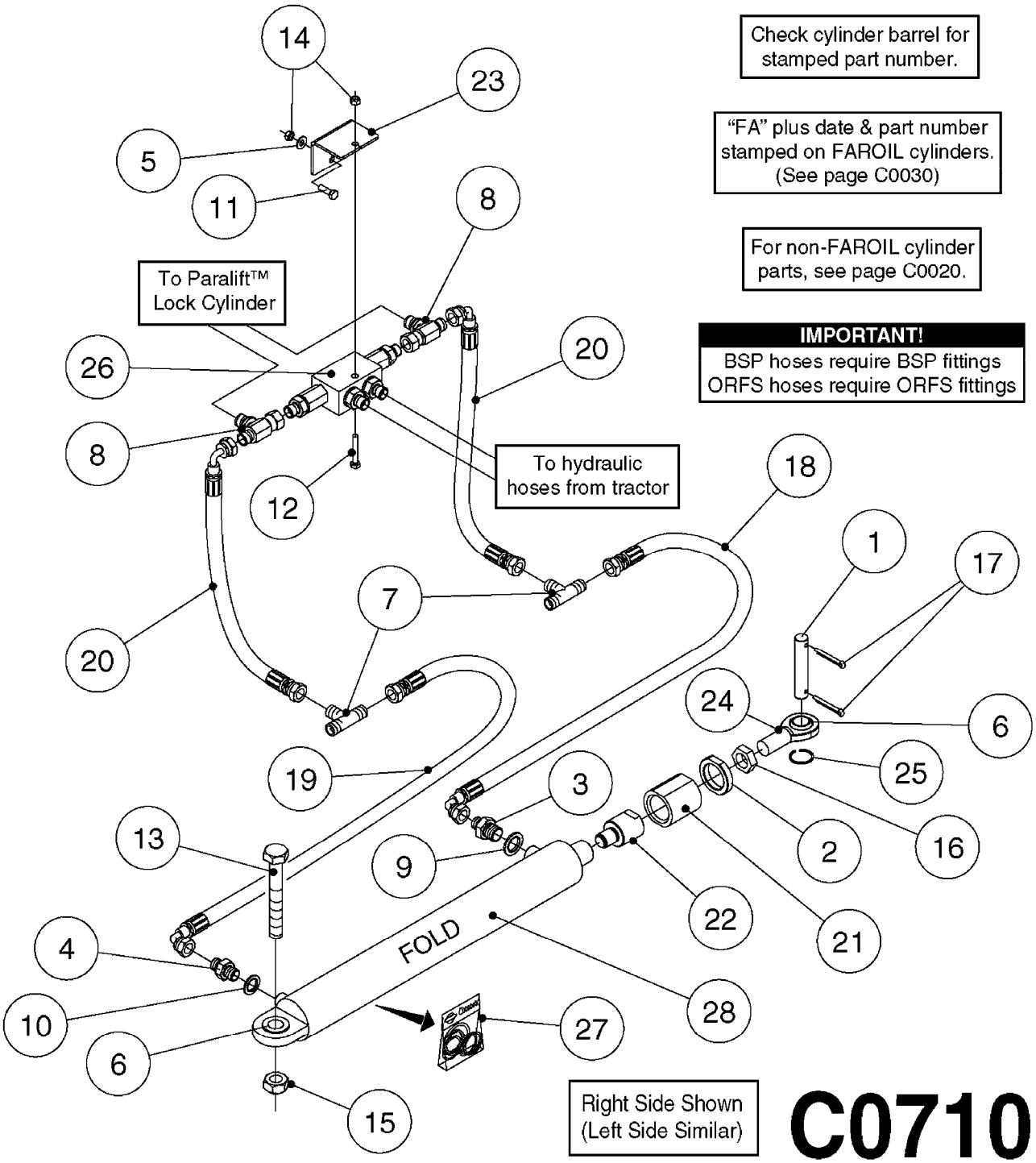

Agroparts: www.HARDI-INTERNATIONAL.com

HYD EAGLE HY SPC 80'-100'
C0710-HIN, 27:09:17

Date 12.08.2020 11:36

Pos.	parts-n°	order qty	description
1	146589	1	PIN D19.8 X 65
2	146672	1	NUT HEX LOCK F.ADJUSTER
3	146839	1	HEX NIPPLE 1/4"X3/8" BSP 0.7MM BSP
3	23235800	1	HEX NIPPLE 3/8"-9/16" - 0.7mm ORFS
4	146845	1	HEX NIPPLE 1/4"X1/4" BSP
4	23234500	1	HEX NIPPLE 1/4" - 9/16" ORFS
5	163936	1	WASHER D15/D6.2X1
6	210730	1	BEARING F.LINK HEAD M20
7	230963	1	TEE 1/4"M X 1/4"M X 1/4"M BSP BSP
7	23240400	1	TEE 9/16"-9/16"-9/16" ORFS ORFS
8	232109	1	FITT.HY TEE 1/4"BSP UNION BSP
8	23241000	1	TEE 9/16"M-9/16"M-9/16"F ORFS ORFS
9	240866	1	DOWTYSEAL 3/8"
10	241404	1	DOWTY SEAL 1/4"
11	410362	1	BOLT HEX 8.8 SS M6X20
12	410583	1	BOLT HEX 8.8 DEL M6X40
13	430910	1	BOLT HEX 8.8 DEL M20X110
14	460261	1	NUT HEX M6X1.00 LOCK DIN985 A2 SS
15	460806	1	NUT HEX M20X2.50 LOCK DIN985A2 SS
16	461200	1	NUT HEX M20X1.5 JAMB.
17	480384	1	PIN COTTER 3/16 x 1-1/2"
18	784008	1	HOSE HY X 1/4" X 98.4"STR+ELB BSP
18	78500800	1	HY.HO.1/4"L= 2500 STR-90° ORFS
19	784025	1	HOSE HY X 1/4" x 86.6"STR+ELB BSP
19	78502100	1	HY.HO.1/4"L= 2200 STR-90° ORFS
20	784076	1	HOSE,HY,1/4" L=8.5" STR-ELB BSP
20	78505400	1	HY.HO.1/4"L= 215 STR-90° ORFS
21	14023000	1	BUSHING Ø50.0/36.0 L=52 DEL
22	14031800	1	ADAPTOR F.HY CYLINDER L=40
23	16100400	1	PLATE 3 X 60 X 91 HY BLOCK MT
24	21092000	1	LINK HEAD M20 x D20 L=78 DELTA
25	48000603	1	SNAP RING, Ø36X1.5 F.210730
26	72256500	1	DOUB.PILOT STEERED COUNT.VALVE
27	75074600	1	SEAL KIT 78120500/49
28	78128000	1	CYLINDER DOUB. D60/30 L=300 09

	Agroparts: www.HARDI-INTERNATIONAL.com	
HARDI	ACCUMULATOR C0720-HIN, 07:02:18	Page 0 Date 12.08.2020 11:36

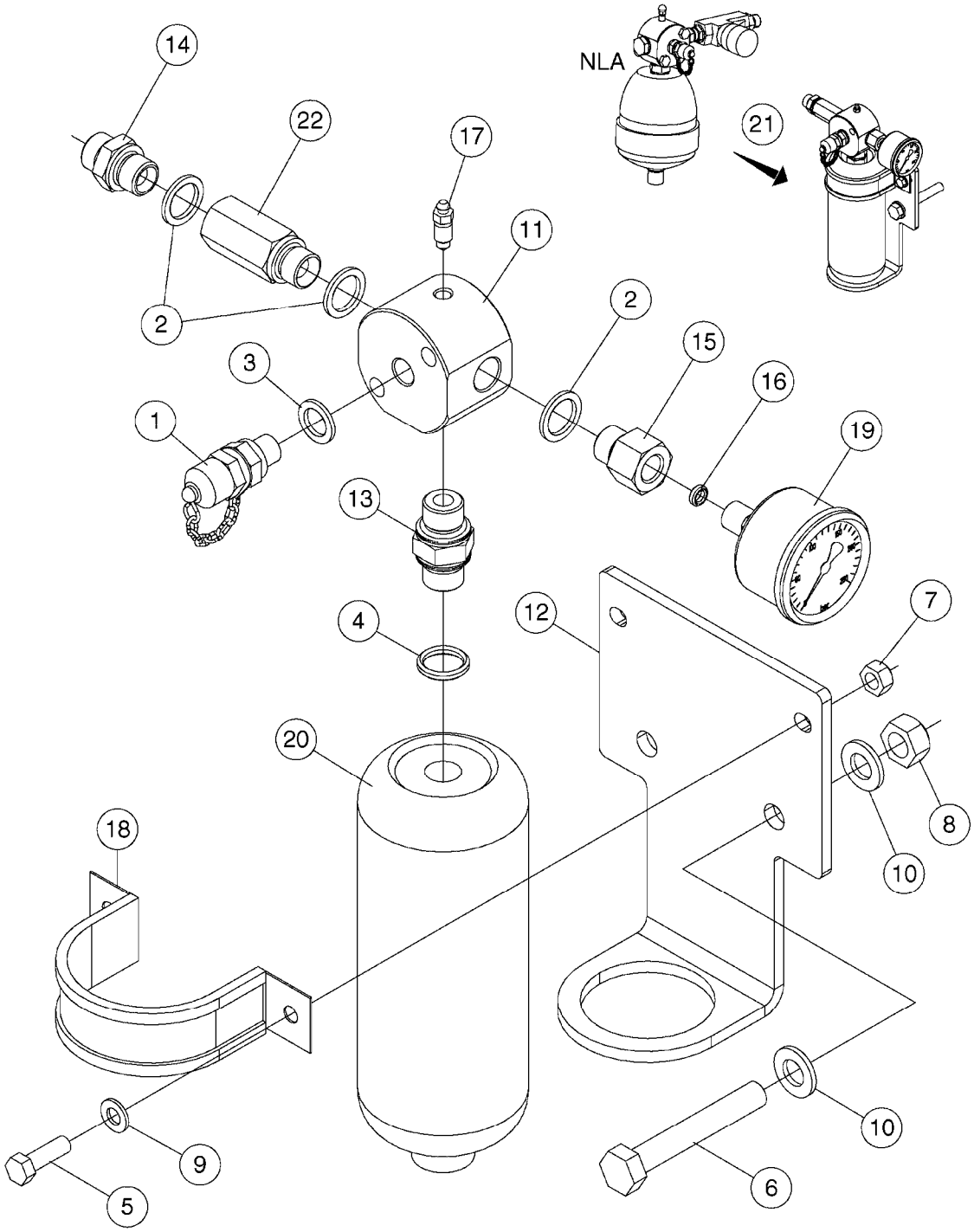

C0720

Agroparts: www.HARDI-INTERNATIONAL.com

ACCUMULATOR
C0720-HIN, 07:02:18

Date 12.08.2020 11:36

Pos.	parts-nº	order qty	description
1	231955	1	NIPPLE F. PRESS GAUGE 1/4" BSP
2	240866	1	DOWTYSEAL 3/8"
3	241404	1	DOWTY SEAL 1/4"
4	242288	1	SEAL F. HYD ACCUMULATOR TWIN
5	421046	1	BOLT HEX M8X25/25 A2 SS DIN933
6	430846	1	BOLT HEX 8.8 DEL M12X80
7	460143	1	LOCK NUT M8 SST A2 DIN985
8	460703	1	NUT HEX M12X1.75 LOCK DIN985A2 SS
9	471126	1	WASHER, M8, Ø16/ 8.4X 1.6, SS
10	471127	1	WASHER, M12, Ø24/13X24X2.5 SS
11	14054000	1	HYD.BLOCK F.SUSPENSION TDZ
12	16468100	1	BESLAG F. AKKUMULATOR TDZ, RØD
13	23233900	1	HEX NIPPLE M18X1.5 - M18X1.5
14	23234300	1	HEX NIPPLE 3/8"-11/16"
15	23243400	1	FITTING, 1/4" BSPFX3/8"BSPM
16	24266100	1	SEAL, 1/4" PRESSURE GAUGE
17	28076000	1	BLEED SCREW M8
18	28125900	1	HANGER F. ACCUMULATOR
19	28153300	1	PRESSURE GAUGE, YAW, TDZ, 0-250 BAR
20	28159300	1	ACCUMULATOR 0.35L PRECHARGE 50 BAR
21	73011700	1	ACCUMULATOR UPGRADE KIT TDZ YAW
22	78211900	1	NON RETURN 1.00 REST 3/8 M/F

HYDRAULICS TDZ BOOM (A)
C0730-HIN, 16:07:19

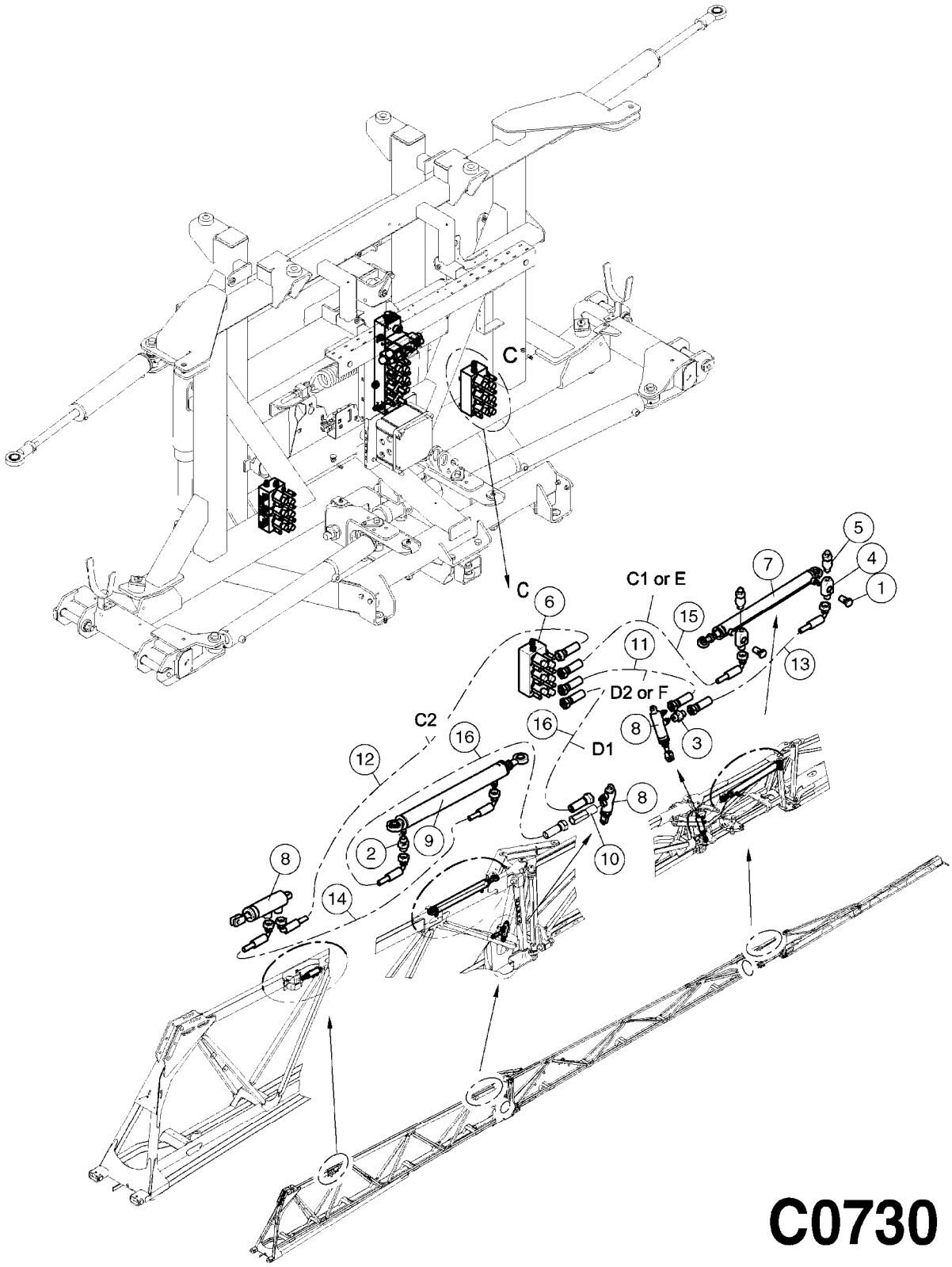

Agroparts: www.HARDI-INTERNATIONAL.com

HYDRAULICS TDZ BOOM (A)
C0730-HIN, 16:07:19

Date 12.08.2020 11:36

Pos.	parts-n°	order qty	description
1	232169	1	BANJO BOLT 1/4" BSP DELTA
2	23234100	1	HEX NIPPLE 1/4"-9/16" - 1.2mm
3	23234500	1	HEX NIPPLE 1/4" - 9/16"
4	23242500	1	BANJO FITT. 9/16" X 1/4" W/AIR
5	28076000	1	BLEED SCREW M8
6	72762200	1	HYD.BLOCK ASSY. 3 FUNC.RIGHT
6	72762300	1	HYD.BLOCK ASSY. 3 FUNC.LEFT
7	78127200	1	CYLINDER DOUB. D40/25 L=455
8	78127800	1	HYDRAULIC CYLINDER 25-40
9	78128700	1	CYLINDER DOUBLE D50/30 500
10	78216200	1	SEQUENCE VALVE 80 BAR
11	78500300	1	HY.HO.1/4"L= 1200 STR-90°
12	78501300	1	HY.HO.1/4"L= 4200 STR-90°
13	78507400	1	HY.HO.1/4"L= 900 STR-90°
14	78514200	1	HY.HO.1/4"L= 9400 STR-90°
15	78514700	1	HY.HO.1/4"L=15200 STR-90°
16	78515600	1	HY.HO.1/4"L= 8250 STR-STR

HYDRAULICS TDZ BOOM (B)
C0740-HIN, 01:01:16

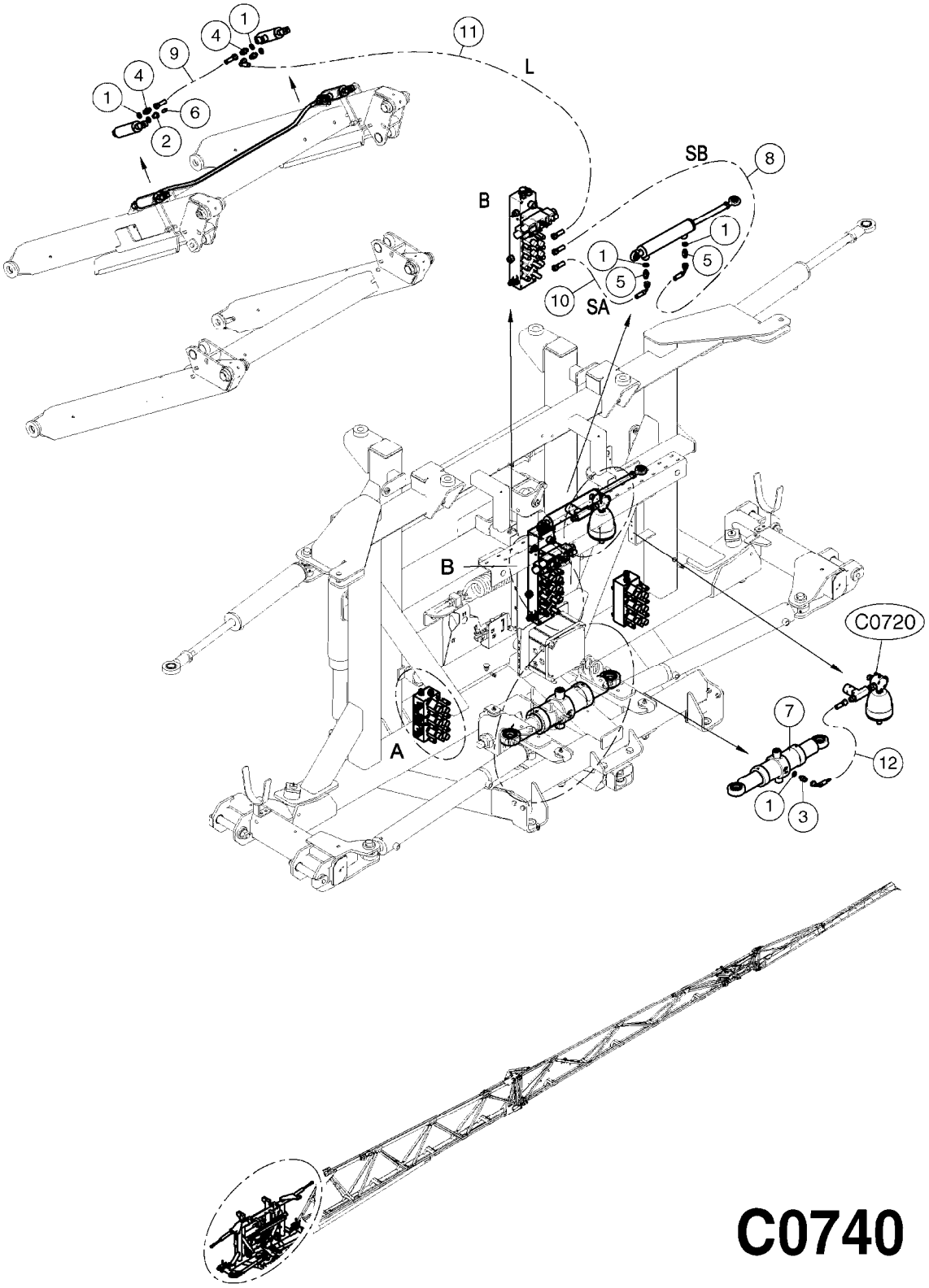

Agroparts: www.HARDI-INTERNATIONAL.com

HYDRAULICS TDZ BOOM (B)
C0740-HIN, 01:01:16

Date 12.08.2020 11:36

Pos.	parts-n°	order qty	description
1	241404	1	DOWTY SEAL 1/4"
2	14090800	1	PLUG, 1/4" W/M8 HOLE
3	23234200	1	HEX NIPPLE 1/4"-11/16"
4	23234500	1	HEX NIPPLE 1/4" - 9/16"
5	23234700	1	HEX NIPPLE 1/4"-9/16" - 0.7mm
6	28076000	1	BLEED SCREW M8
7	78128500	1	CYLINDER DOUBLE PLUNGER D60X75
8	78501800	1	HY.HO.1/4"L= 650 STR-90°
9	78504800	1	HY.HO.1/4"L= 900 STR-STR
10	78506600	1	HY.HO.1/4"L= 400 STR-90°
11	78516100	1	HY.HO.1/4"L= 2000 STR-STR
12	78560600	1	HY.HO.3/8"L= 1200 STR-90°

HYDRAULICS TDZ BOOM (C)
C0750-HIN, 01:01:16

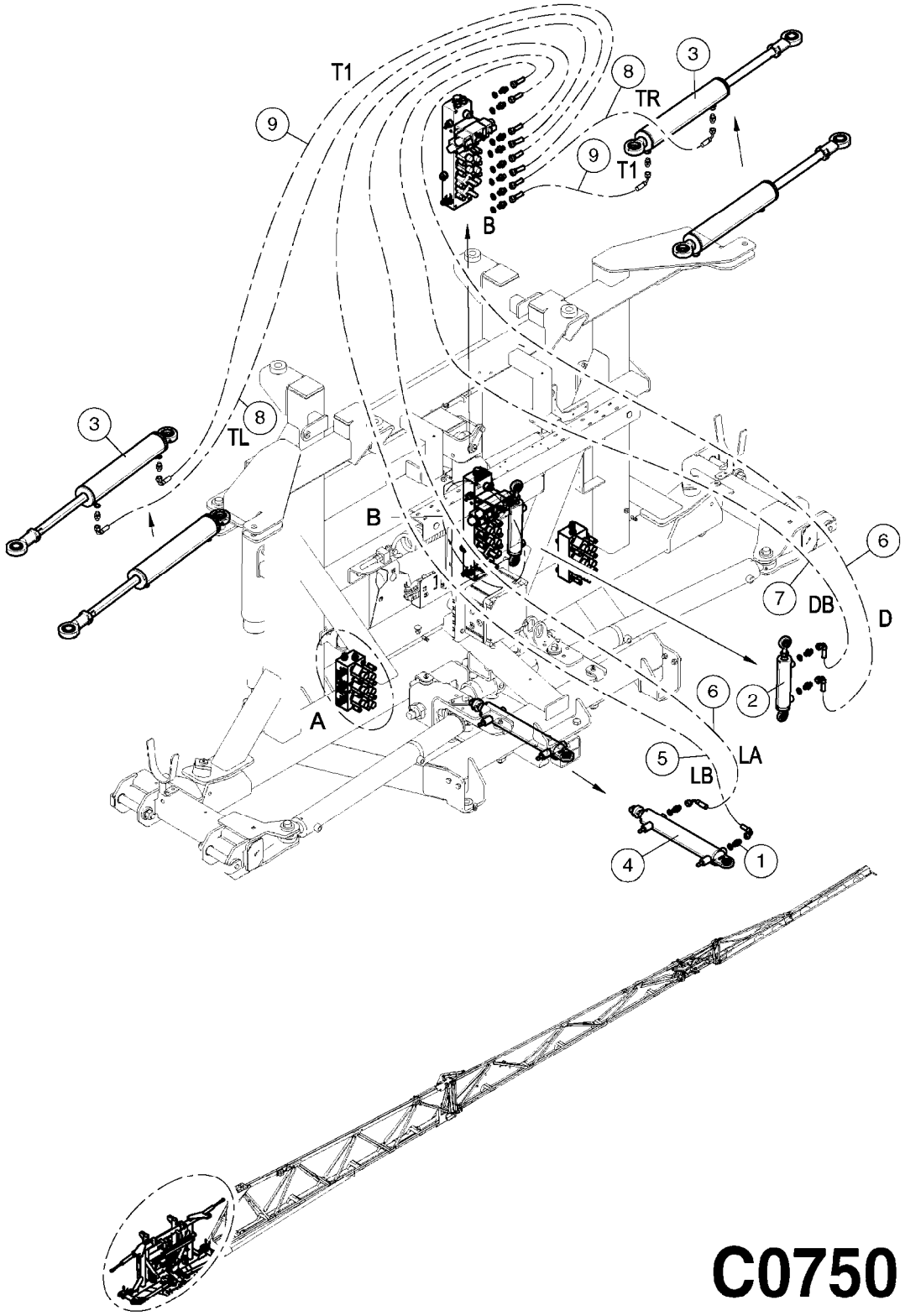

Agroparts: www.HARDI-INTERNATIONAL.com

HYDRAULICS TDZ BOOM (C)
C0750-HIN, 01:01:16

Date 12.08.2020 11:36

Pos.	parts-n°	order qty	description
1	23234700	1	HEX NIPPLE 1/4"-9/16" - 0.7mm
2	78123100	1	CYLINDER DOUBLE D40/20-120
3	78128100	1	CYLINDER 70/30-300/TILT TDZ
4	78130600	1	DOB.CYL.Ø50/25-240/M. SENSOR
5	78500300	1	HY.HO.1/4"L= 1200 STR-90°
6	78502300	1	HY.HO.1/4"L= 1350 STR-90°
7	78505300	1	HY.HO.1/4"L= 1450 STR-90°
8	78560400	1	HY.HO.3/8"L= 2500 STR-90°
9	78560500	1	HY.HO.3/8"L= 2150 STR-90°

HYD EAG. HZ SPC 90/60'DUALFOLD
C0760-HIN, 11:10:17

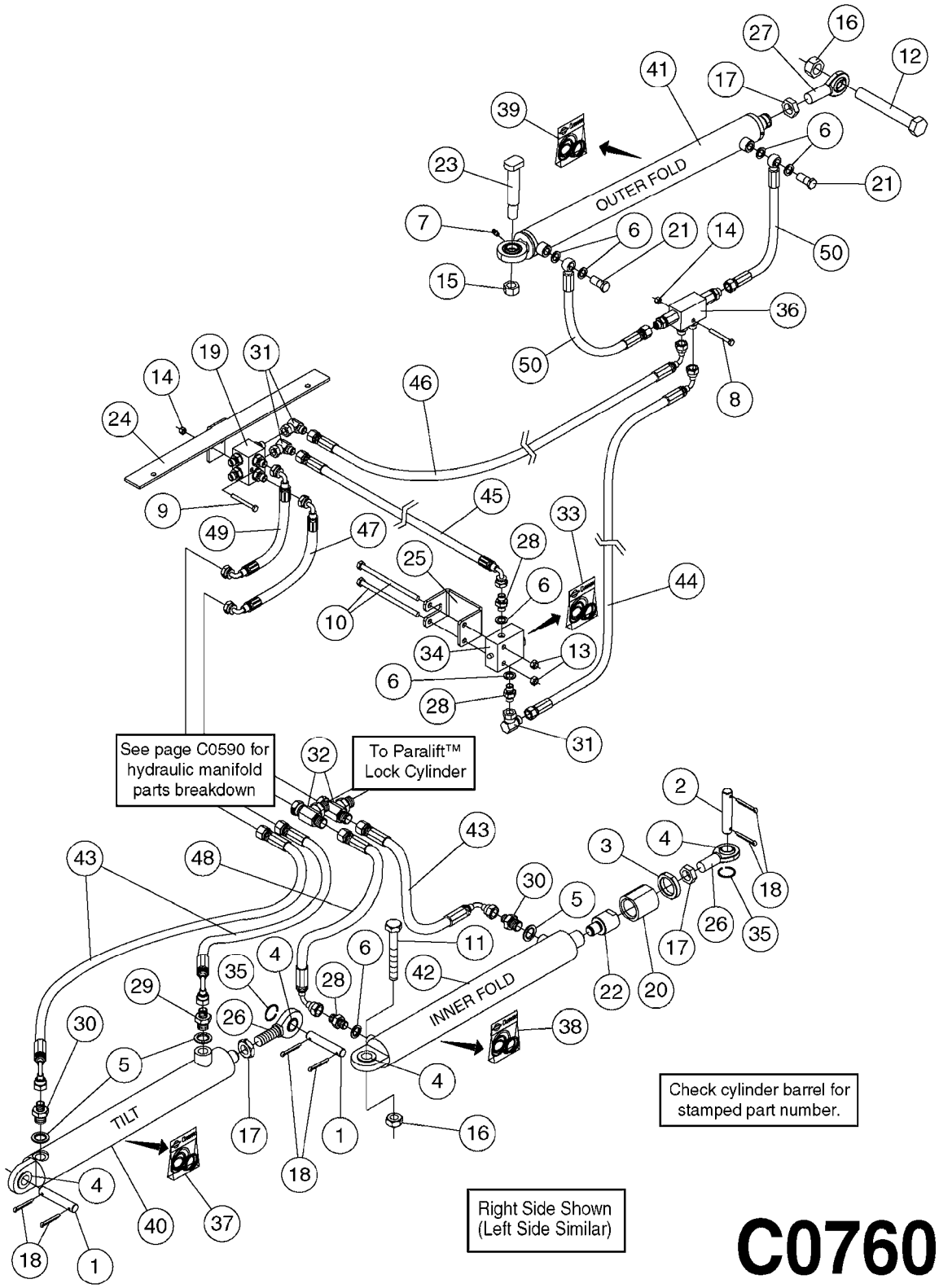

C0760

Agroparts: www.HARDI-INTERNATIONAL.com

HYD EAG. HZ SPC 90/60'DUALFOLD
C0760-HIN, 11:10:17

Date 12.08.2020 11:36

Pos.	parts-n°	order qty	description
1	146450	1	PIN D19.8 X 75 WITH 2 X D5
2	146589	1	PIN D19.8 X 65
3	146672	1	NUT HEX LOCK F.ADJUSTER
4	210730	1	BEARING F.LINK HEAD M20
5	240866	1	DOWTYSEAL 3/8"
6	241404	1	DOWTY SEAL 1/4"
7	283699	1	GREASE NIPPLE M6X1
8	410561	1	BOLT HEX 8.8 DEL M6X50 FT
9	411008	1	BOLT HEX 8.8 DEL M6X55
10	420987	1	BOLT HEX 8.8 SS M8X140
11	430910	1	BOLT HEX 8.8 DEL M20X110
12	430979	1	BOLT HEX M20x140 8.8 DELTA
13	460143	1	LOCK NUT M8 SST A2 DIN985
14	460261	1	NUT HEX M6X1.00 LOCK DIN985 A2 SS
15	460585	1	LOCKING NUT M16 DIN985 A2 SS
16	460806	1	NUT HEX M20X2.50 LOCK DIN985A2 SS
17	461200	1	NUT HEX M20X1.5 JAMB.
18	480384	1	PIN COTTER 3/16 x 1-1/2"
19	731941	1	HYD. BLOCK MANIFOLD
20	14023000	1	BUSHING Ø50.0/36.0 L=52 DEL
21	14027000	1	BANJO BOLT, 1/4" BSP, 0.7MM
22	14031800	1	ADAPTOR F.HY CYLINDER L=40
23	14107700	1	PIN, Ø19.8 F. 90/60 CYLINDER
24	16158003	1	PLATE,3/16",375 X 119,FOLDED
25	16349600	1	BRACKET, END-STOP VALVE, 90/60
26	21092000	1	LINK HEAD M20 x D20 L=78 DELTA
27	21092100	1	LINK HEAD M20 x D20 L=73, DELTA
28	23234500	1	HEX NIPPLE 1/4" - 9/16"
29	23235700	1	HEX NIPPLE 3/8"-9/16"
30	23235800	1	HEX NIPPLE 3/8"-9/16" - 0.7mm
31	23240900	1	HYD.FIT. M-F 90° 9/16"-9/16"
32	23241000	1	TEE 9/16"M-9/16"M-9/16"F ORFS
33	28001800	1	REPAIR KIT F.ENDSTOP 1/4"
34	28028600	1	END STOP 1/4"
35	48000603	1	SNAP RING, Ø36X1.5 F.210730
36	72256500	1	DOUB.PILOT STEERED COUNT.VALVE
37	75074400	1	SEAL KIT 78121800/21/44
38	75074600	1	SEAL KIT 78120500/49
39	75084400	1	SEAL KIT FOR 78127200/7500
40	78122100	1	CYLINDER DOUBLE D50/25-298
41	78127200	1	CYLINDER DOUB. D40/25 L=455
42	78128000	1	CYLINDER DOUB. D60/30 L=300 09
43	78500800	1	HY.HO.1/4"L= 2500 STR-90°
44	78501703	1	HY.HO.1/4"L= 2586 STR-90°
45	78501803	1	HY.HO.1/4"L= 7879 STR-90°
46	78501903	1	HY.HO.1/4"L= 9849 STR-90°
47	78502003	1	HY.HO.1/4"L= 250 90°-90°A=0
48	78502100	1	HY.HO.1/4"L= 2200 STR-90°
49	78502103	1	HY.HO.1/4"L= 206 90°-90°A=0
50	78502203	1	HY.HO.1/4"L= 250 STR-BAN

HYD EAG.HZ SPC 120/90'DUALFOLD
C0770-HIN, 08:05:19

Date 12.08.2020 11:36

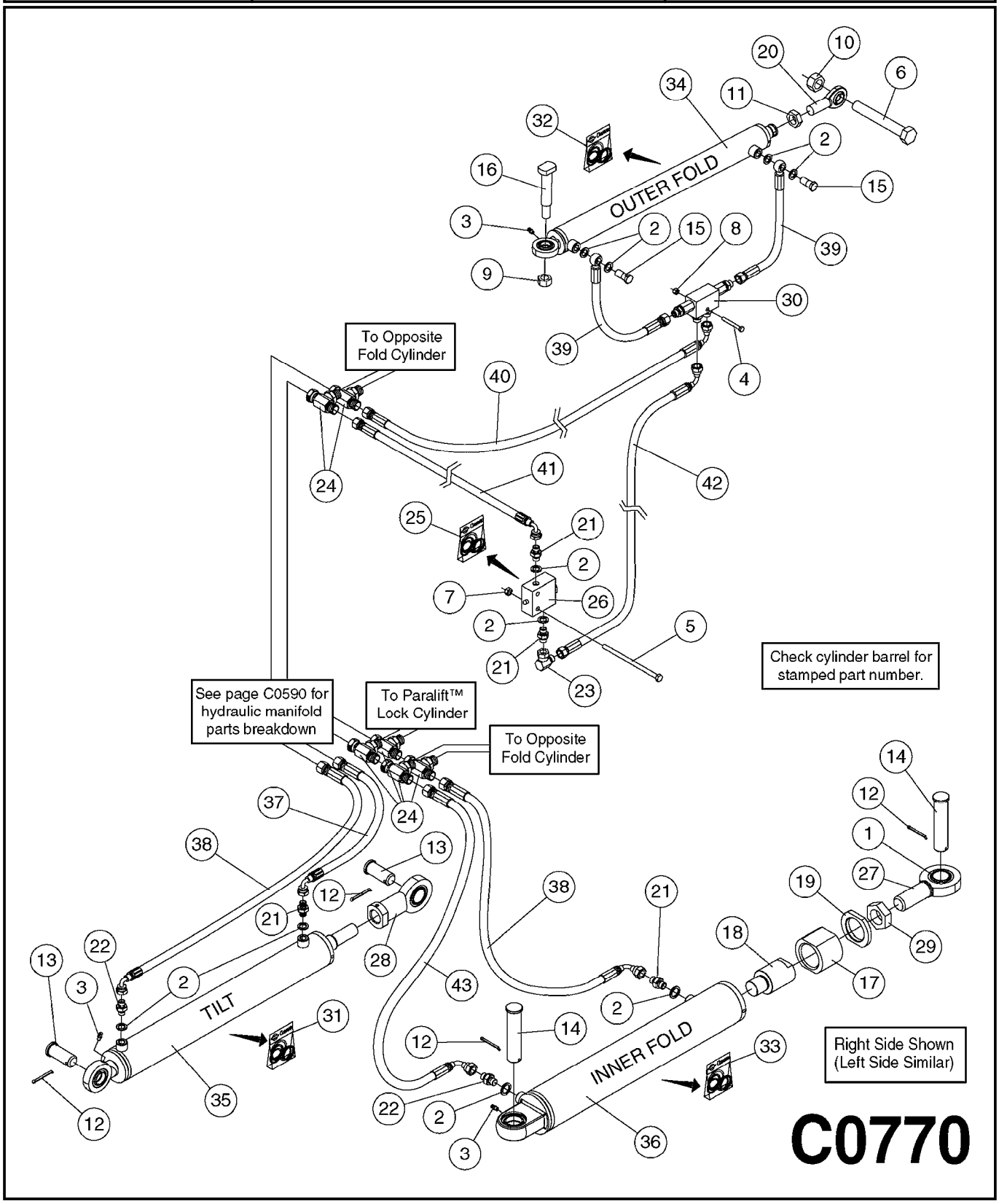

Agroparts: www.HARDI-INTERNATIONAL.com

HYD EAG.HZ SPC 120/90'DUALFOLD
C0770-HIN, 08:05:19

Date 12.08.2020 11:36

Pos.	parts-n°	order qty	description
1	210873	1	BEARING LINKHEAD D30
2	241404	1	DOWTY SEAL 1/4"
3	283699	1	GREASE NIPPLE M6X1
4	410561	1	BOLT HEX 8.8 DEL M6X50 FT
5	421262	1	BOLT HEX M8X150 DIN931-A2 SS
6	430979	1	BOLT HEX M20x140 8.8 DELTA
7	460143	1	LOCK NUT M8 SST A2 DIN985
8	460261	1	NUT HEX M6X1.00 LOCK DIN985 A2 SS
9	460585	1	LOCKING NUT M16 DIN985 A2 SS
10	460806	1	NUT HEX M20X2.50 LOCK DIN985A2 SS
11	461200	1	NUT HEX M20X1.5 JAMB.
12	480384	1	PIN COTTER 3/16 x 1-1/2"
13	14018903	1	PIN, Ø24.8, L=65
14	14019003	1	PIN, Ø29.8, L=117
15	14027000	1	BANJO BOLT, 1/4" BSP, 0.7MM
16	14107700	1	PIN, Ø19.8 F. 90/60 CYLINDER
17	14109600	1	BUSHING M48 X 2
18	14109700	1	ADAPTOR F. HYD. CYL.
19	14109800	1	NUT M48 X 2
20	21092100	1	LINK HEAD M20 x D20 L=73, DELTA
21	23234500	1	HEX NIPPLE 1/4" - 9/16"
22	23234700	1	HEX NIPPLE 1/4"-9/16" - 0.7mm
23	23240900	1	HYD.FIT. M-F 90° 9/16"-9/16"
24	23241000	1	TEE 9/16"M-9/16"M-9/16"F ORFS
25	28001800	1	REPAIR KIT F.ENDSTOP 1/4"
26	28028600	1	END STOP 1/4"
27	28113000	1	LINKEYE Ø30 M30 X 2
28	28115000	1	LINK HEAD M24 X 2 X Ø25
29	46133400	1	NUT HEX M30x2.0
30	72256500	1	DOUB.PILOT STEERED COUNT.VALVE
31	75075400	1	SEAL KIT 78120800
32	75084400	1	SEAL KIT FOR 78127200/7500
33	75085500	1	SEAL KIT FOR HYDRAULIC CYLINDER 78131100
34	78127200	1	CYLINDER DOUB. D40/25 L=455
35	78131000	1	CYLINDER, 60/30X462, 120' SPC
36	78131100	1	HY. CYLINDER, 70/40X400
37	78500400	1	HY.HO.1/4"L= 2700 STR-90°
38	78500800	1	HY.HO.1/4"L= 2500 STR-90°
39	78502203	1	HY.HO.1/4"L= 250 STR-BAN
40	78502303	1	HY.HO.1/4"L=14150 STR-90°
41	78502403	1	HY.HO.1/4"L= 8670 STR-90°
42	78502503	1	HY.HO.1/4"L= 6200 STR-90°
43	78502703	1	HY.HO.1/4"L= 3100 STR-90°

HYD PARALIFT SARITOR
C0780-HIN, 14:05:19

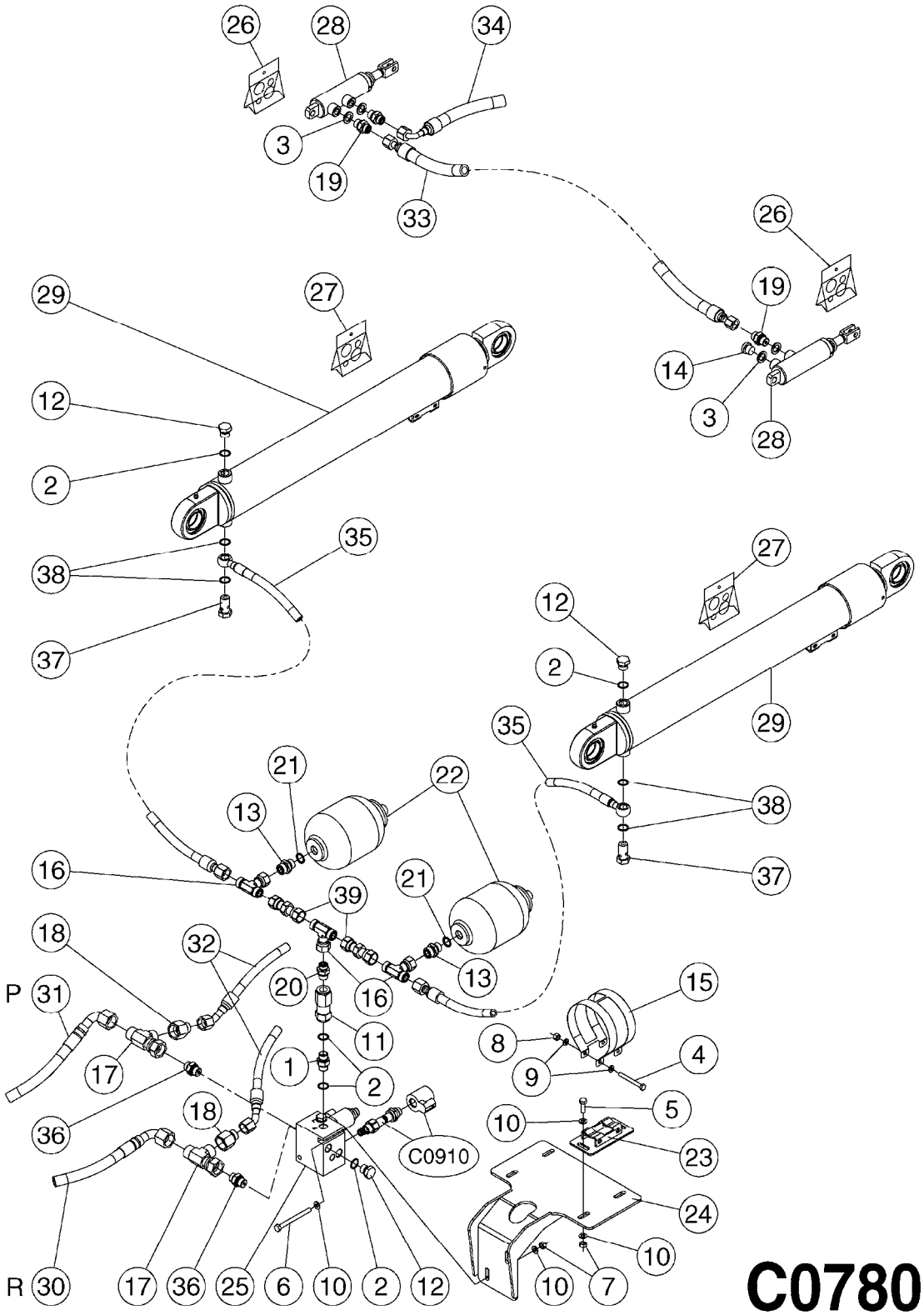

C0780

Agroparts: www.HARDI-INTERNATIONAL.com

HYD PARALIFT SARITOR
C0780-HIN, 14:05:19

Date 12.08.2020 11:36

Pos.	parts-n°	order qty	description
1	146836	1	HEX NIPPLE 3/8"X3/8" BSP
2	240866	1	DOWTYSEAL 3/8"
3	241404	1	DOWTY SEAL 1/4"
4	411008	1	BOLT HEX 8.8 DEL M6X55
5	420582	1	BOLT HEX 8.8 DEL M8X20 FT A2
6	420803	1	BOLT HEX 8.8 DEL M8X90
7	460143	1	LOCK NUT M8 SST A2 DIN985
8	460261	1	NUT HEX M6X1.00 LOCK DIN985 A2 SS
9	471125	1	WASHER M6U 6.4X14X1.2,A2 SS
10	471126	1	WASHER, M8, Ø16/ 8.4X 1.6, SS
11	782874	1	CHECK VALVE 80R 10/32
12	786888	1	PLUG 3/8" BSP
13	14005301	1	HEX NIPPLE 13/16" - M18X1.50M
13	242102	1	O-RING Ø9.25X1.78 NITRIL 90SH
14	14010400	1	PLUG 1/4" BSP
15	16277700	1	PLATE 1 X 100 X 291
16	23007103	1	13/16'' SWIVEL NUT BRANCH TEE
17	23007203	1	1'' SWIVEL NUT RUN TEE
18	23007303	1	FITT, HYD, REDUCER 1''F-13/16''M
18	24263300	1	O-RING Ø12.42X1.78 NITRIL 90SH
19	23234200	1	HEX NIPPLE 1/4"-11/16"
19	242102	1	O-RING Ø9.25X1.78 NITRIL 90SH
20	23236000	1	HEX NIPPLE 3/8"-13/16"
20	24263300	1	O-RING Ø12.42X1.78 NITRIL 90SH
21	24005301	1	O-RING D15.7 F. HYD. FIT. M18X1,5
22	28103700	1	ACCUMULATOR 170 BAR TDZ PARALI
23	61021403	1	ACCUMULATOR BRACKET, SARITOR
24	61021503	1	SUPPORT ACCU.BRKT, SARITOR
25	72286200	1	HYD. BLOCK COMP. PARA-LIFT NCM
26	75084500	1	SEAL KIT FOR 78127800
27	75084800	1	SEAL KIT FOR 78128200/78131200
28	78127800	1	HYDRAULIC CYLINDER 25-40
29	78131400	1	PLUNGE CYLINDER D70 L=838 2X35
30	78500901	1	HY.HO.ITA12 ORFS1'' F90+F90 L4160
31	78501001	1	HY.HO.ITA12 ORFS1'' F90+F90 L4230
32	78503903	1	HY.HO.3/8"L= 3750 #8/STR-#8/45°
33	78505001	1	HYDRAULIC HOSE 1TA8 ORFS 11/16FD L950
34	78522301	1	HYDRAULIC HOSE 1TA8 ORFS11/16 FD+F90 L1850
35	78546201	1	HYDRAULIC HOSE 1TA10 ORFS13/16F90+BA L1100
36	78617001	1	HEX NIPPLE 1/2" - 1"
37	78625301	1	HYD.BOLT 5691717
38	78625401	1	COPPER SEAL 6080017
39	78628601	1	ADAPTOR 13/16" 70.57.00.08

HYD. FLOW REG. BLOCK PRESIDIO
C0790-HIN, 27:07:16

Date 12.08.2020 11:36

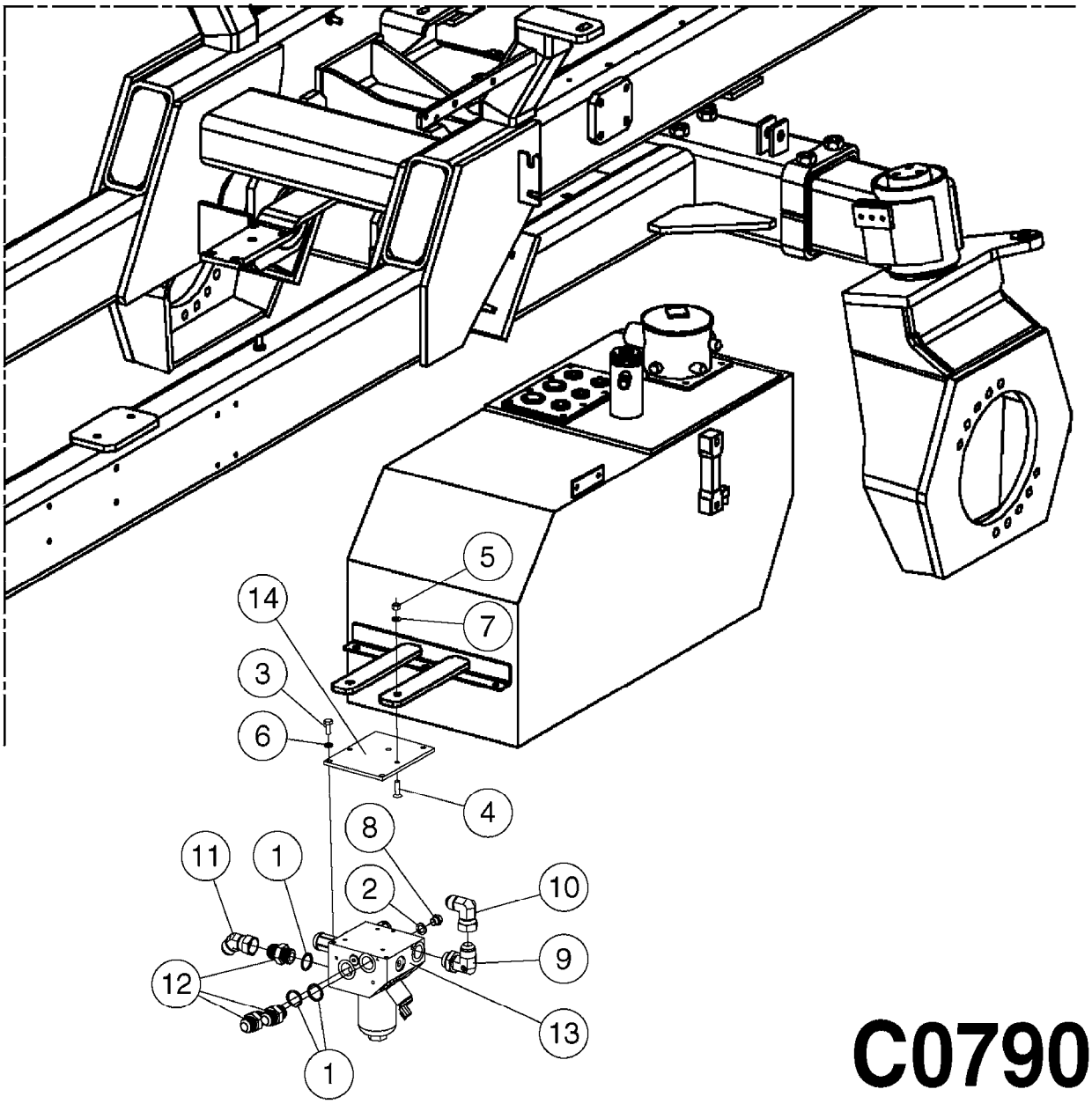

C0790

Agroparts: www.HARDI-INTERNATIONAL.com

HYD. FLOW REG. BLOCK PRESIDIO
C0790-HIN, 27:07:16

Date 12.08.2020 11:36

Pos.	parts-n°	order qty	description
1	241367	1	DOWTYSEAL 28.5x22
2	241404	1	DOWTY SEAL 1/4"
3	420582	1	BOLT HEX 8.8 DEL M8X20 FT A2
4	458032	1	BOLT M8X30 8.8 DIN7991D SS
5	460143	1	LOCK NUT M8 SST A2 DIN985
6	470407	1	WASHER D14.8D8.1X2 LOCK SS
7	471126	1	WASHER, M8, Ø16/ 8.4X 1.6, SS
8	14010400	1	PLUG 1/4" BSP
9	23006603	1	HEX NIPPLE #12JICM-#12BSPP90M ADJUST.
10	23006703	1	HEX NIPPLE #12JICM-#12JIC90F
11	23006803	1	HEX NIPPLE #12JICM-#12JIC45F
12	23006903	1	HEX NIPPLE #12JICM-#12BSPPM
13	78201601	1	HYD CONTROL FOR FLUID PUMP
14	PR-FEPR25098	1	BRACKET, HY.FLOW REG.BLOC, PRESIDIO

HYD. LIFT BLOCK PRESIDIO
C0800-HIN, 03:06:19

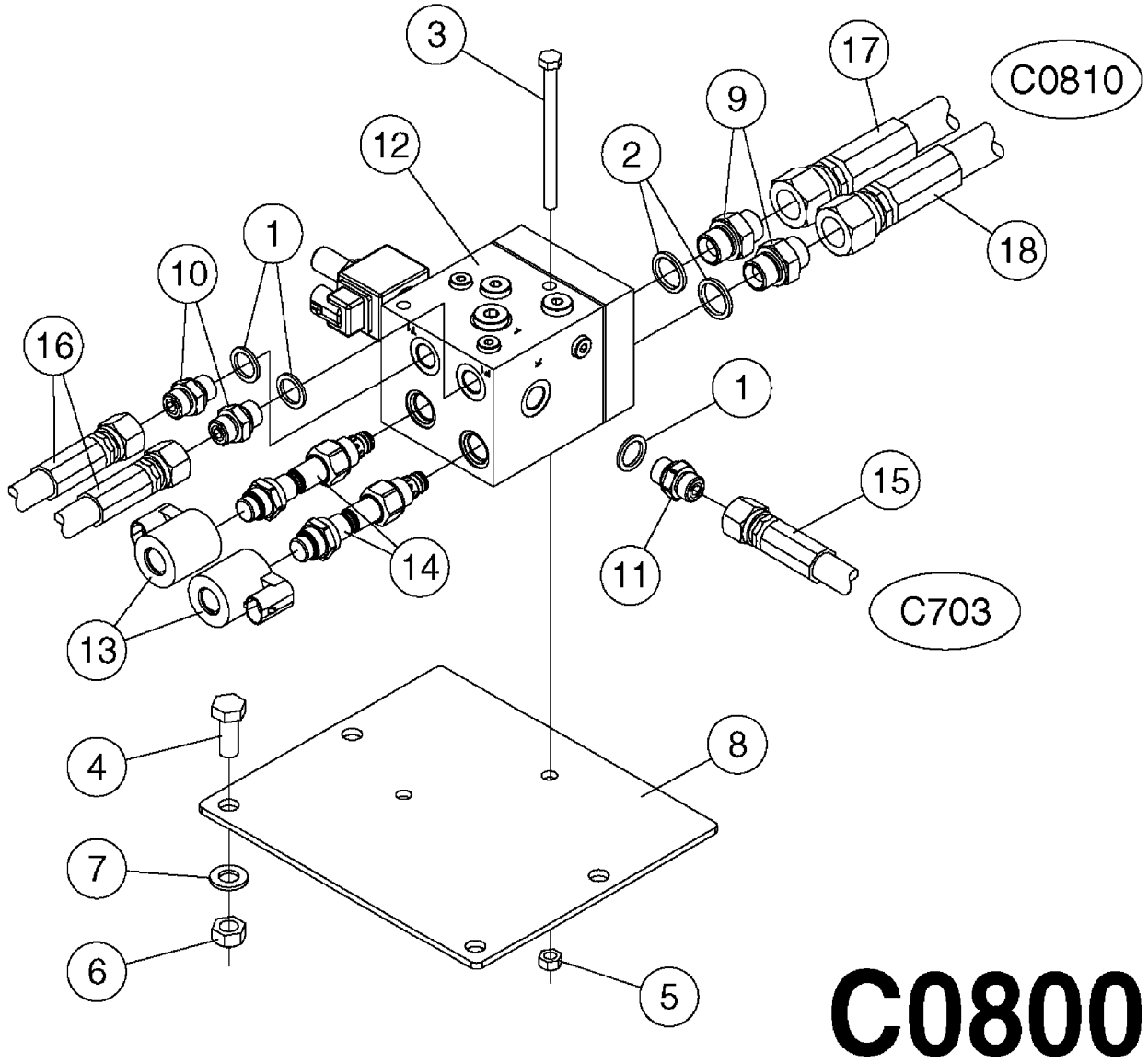

C0800

Agroparts: www.HARDI-INTERNATIONAL.com

HYD. LIFT BLOCK PRESIDIO
C0800-HIN, 03:06:19

Date 12.08.2020 11:36

Pos.	parts-n°	order qty	description
1	240866	1	DOWTYSEAL 3/8"
2	241356	1	DOWTYSEAL 1/2"
3	421232	1	BOLT HEX 8.8 DEL M8X110
4	430286	1	BOLT HEX 8.8 DEL M12X30 FT
5	460143	1	LOCK NUT M8 SST A2 DIN985
6	460703	1	NUT HEX M12X1.75 LOCK DIN985A2 SS
7	471127	1	WASHER, M12, Ø24/13X24X2.5 SS
8	16169003	1	BRACKET LIFT OPEN CENTER, PR, PLATE, FLAT, 3/16"
9	23006003	1	HEX NIPPLE 1/2"-#8 MJIC
10	23234300	1	HEX NIPPLE 3/8"-11/16"
11	23234600	1	HEX NIPPLE 3/8"-11/16" - 1.8mm
12	78200103	1	FLOW/LIFT BLOCK W/RELIEF
13	78222700	1	COIL W. AMP
14	78222900	1	SOLENOID VALVE NO, SINGLE LOCK
15	78421203	1	HY.HO.3/8"L= 381 # 8JIC45F-# 6ORFSSTRF
16	78503503	1	HY.HO.3/8"L= 3000 STR-90°
17	PR-HF1202AT0629	1	HY.HO.1/2" STR-STR
18	PR-HF1202AT0630	1	HY.HO.1/2" STR-STR

BOOM HYD. CIRCUIT PRESIDIO
C0810-HIN, 08:09:16

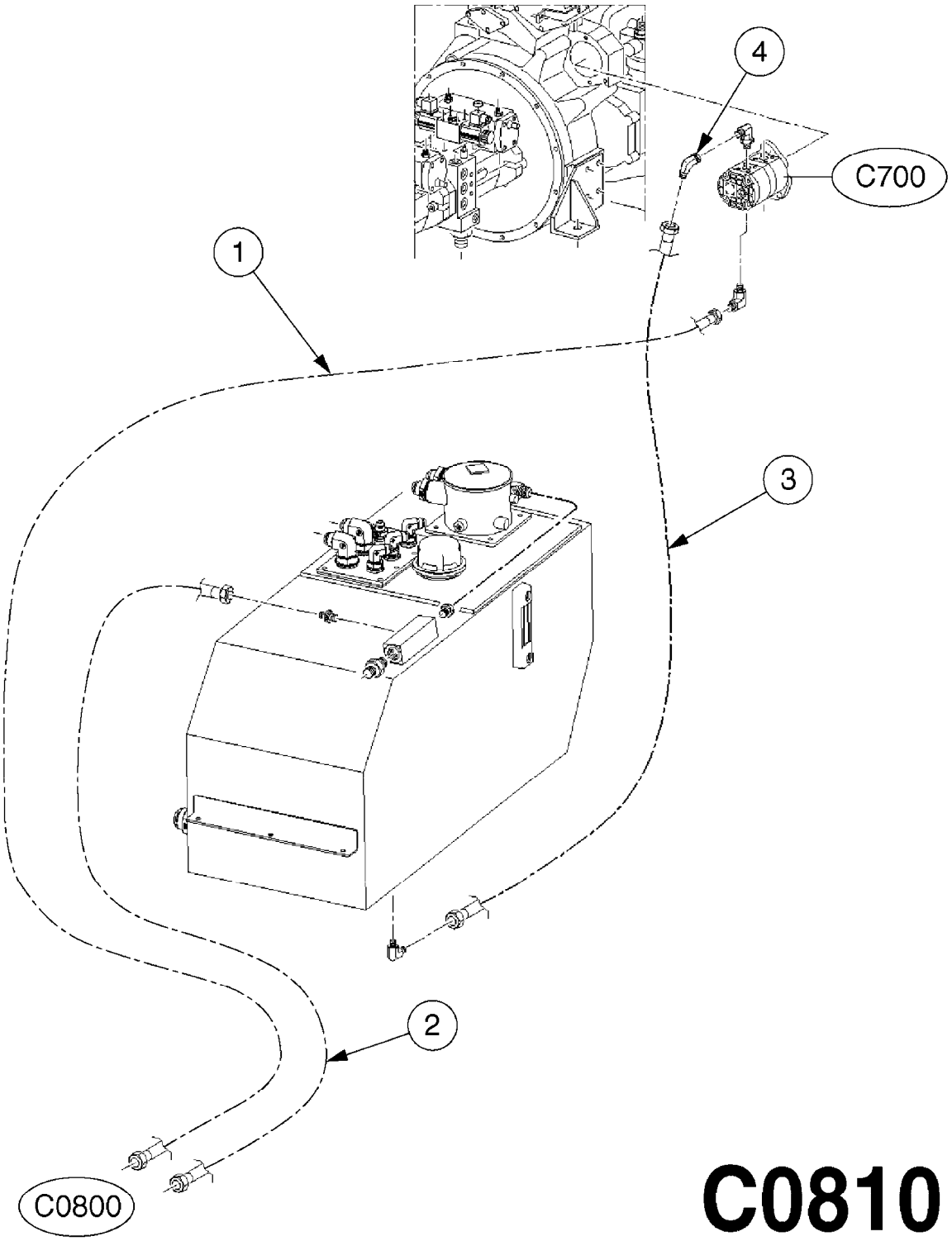

C0810

Agroparts: www.HARDI-INTERNATIONAL.com

BOOM HYD. CIRCUIT PRESIDIO
C0810-HIN, 08:09:16

Date 12.08.2020 11:36

Pos.	parts-nº	order qty	description
1	PR-HF1202AT0629	1	HY.HO.1/2" STR-STR
2	PR-HF1202AT0630	1	HY.HO.1/2" STR-STR
3	PR-HF3402AT0190	1	HOSE FL 3/4 2AT 2350 770 771
4	PR-HR0167	1	HYDRAULIC CONNECTION ELBOW MJ11/16-FJ1

HYD. PARALIFT HAZ ALPHA
C0820-HIN, 14:05:19

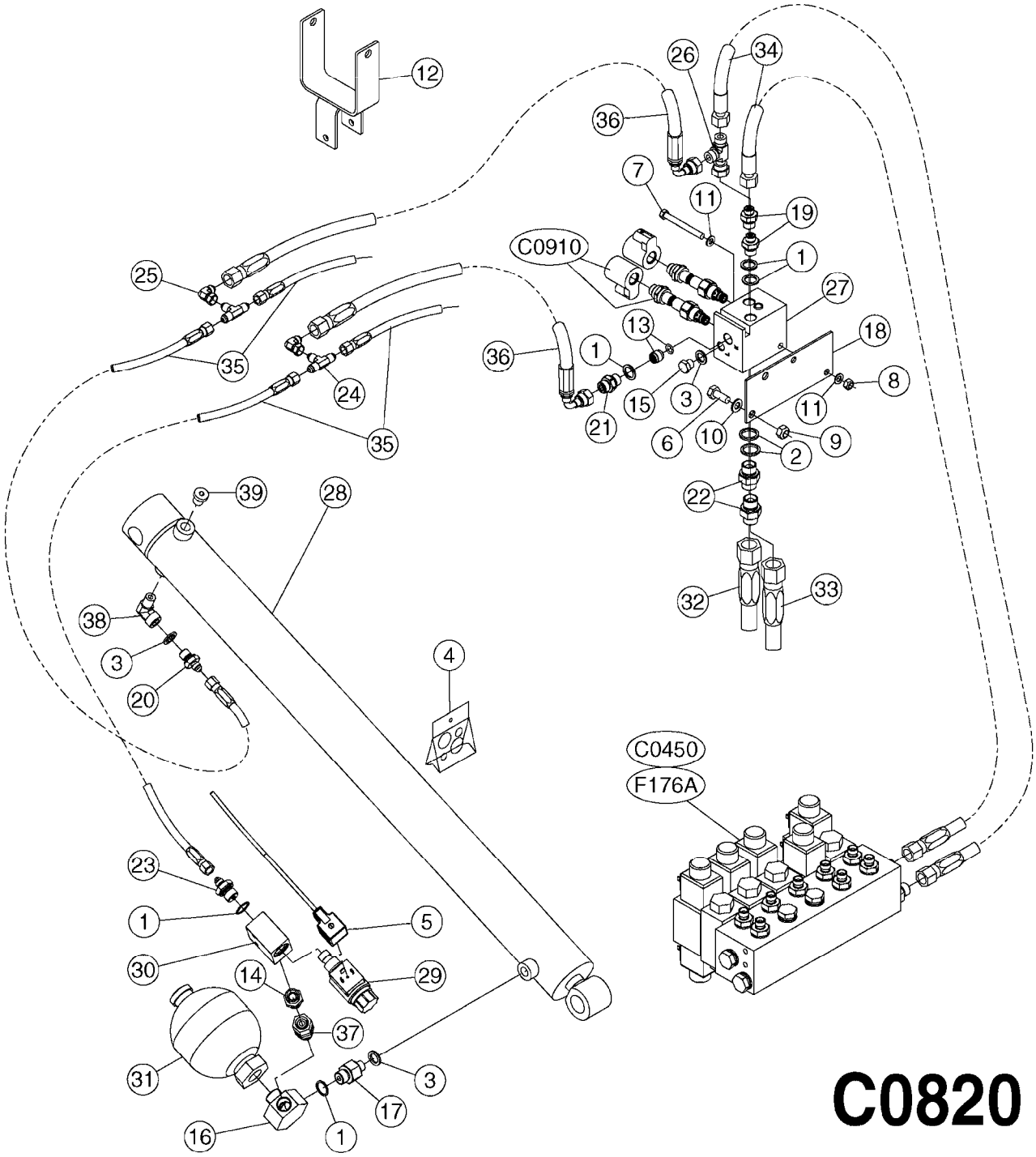

C0820

Agroparts: www.HARDI-INTERNATIONAL.com

HYD. PARALIFT HAZ ALPHA
C0820-HIN, 14:05:19

Date 12.08.2020 11:36

Pos.	parts-n°	order qty	description
1	240866	1	DOWTYSEAL 3/8"
2	241356	1	DOWTYSEAL 1/2"
3	241404	1	DOWTY SEAL 1/4"
4	248334	1	SEAL KIT FOR HYDR. RAM F.ALPHA
4	24013401	1	SEAL KIT FOR CYLINDER 78102801
5	268442	1	CABLE 2X0.75² 10M 247556
6	420604	1	BOLT HEX 8.8 DEL M10X25 FT DIN933
7	421255	1	BOLT HEX 8.8 SS M8X75
8	460143	1	LOCK NUT M8 SST A2 DIN985
9	460423	1	NUT HEX M10X1.50 LOCK DIN985A2 SS
10	471122	1	WASHER, M10, Ø20/10.5X 2.0, SS
11	471126	1	WASHER, M8, Ø16/ 8.4X 1.6, SS
12	618479	1	FEEDHOSE SUPPORT RAN TR2
13	782062	1	NON-RETURN VALVE UTV 3/8"
14	786895	1	HEX NIPPLE X12L (DIN24)
15	14010400	1	PLUG 1/4" BSP
16	14017701	1	HYD FITTING G1/4M - G3/8F 90°
17	14017801	1	HYD FITTING G1/4"M-G3/8"M
18	16216503	1	BKT, LIFT BLOCK, ALPHA
19	23234300	1	HEX NIPPLE 3/8"-11/16"
20	23234500	1	HEX NIPPLE 1/4" - 9/16"
21	23234600	1	HEX NIPPLE 3/8"-11/16" - 1.8mm
22	23235300	1	HEX NIPPLE 1/2"-13/16"
23	23235700	1	HEX NIPPLE 3/8"-9/16"
24	23240800	1	TEE 11/16"-11/16"-11/16" ORFS
25	23241800	1	HYD.FIT. M-F 90° 11/16"-11/16"
26	23242600	1	TEE 11/16"M-11/16"M-11/16"F
27	70078103	1	HYD. BLOCK COMP. PARA-LIFT 1.8
28	78104901	1	CYLINDER DE 70/35 ST715 FP25/TO25 IA883
29	78204301	1	DISTRIBUTOR VALVE 2/2 NF W-01
30	78204401	1	CONNECTING BLOCK
31	78205301	1	ACCUMULATOR ELM0,50 90BAR
32	78505603	1	HY.HO.1/2"L= 4850 STR-STR
33	78505703	1	HY.HO.1/2"L= 3950 STR-90
34	78505803	1	HY.HO.3/8"L= 3555 STR-STR
35	78505903	1	HY.HO.1/4"L= 2300 STR-#6STR
36	78506003	1	HY.HO.3/8"L= 1700 STR-90
37	78602501	1	HYD.FIT. 3/8'' M X 12L F (DIN24)
38	78605201	1	ELBOW MF HYD 1/4' GM14GF14
39	78605301	1	PLUG 1/4"

	Agroparts: www.HARDI-INTERNATIONAL.com	
HARDI	HYD.STEERING ALPHA ECODRIVE C0830-HIN, 01:05:17	Page 0 Date 12.08.2020 11:36

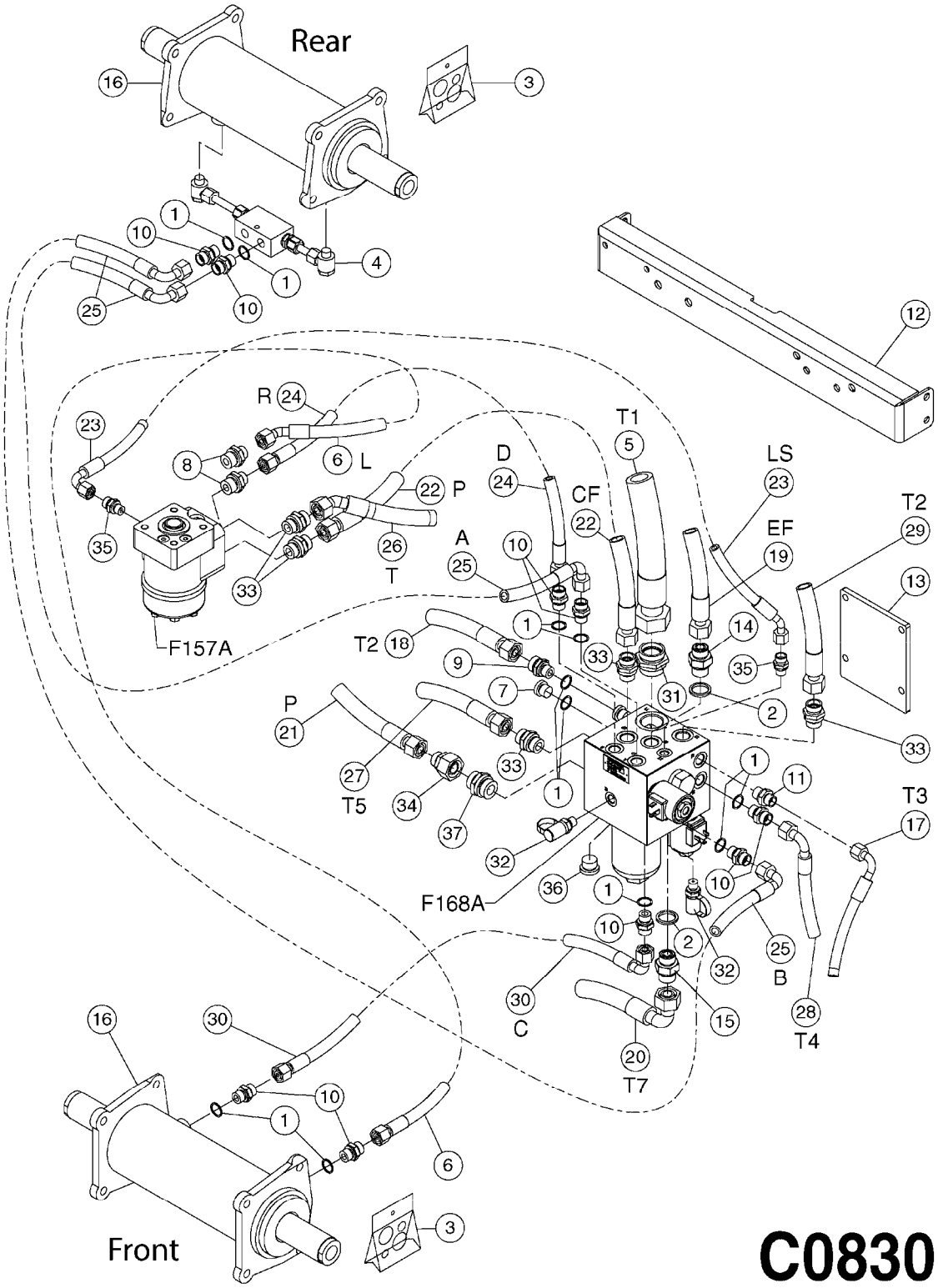

C0830

Agroparts: www.HARDI-INTERNATIONAL.com

HYD.STEERING ALPHA ECODRIVE
C0830-HIN, 01:05:17

Date 12.08.2020 11:36

Pos.	parts-n°	order qty	description
1	240866	1	DOWTYSEAL 3/8"
2	241356	1	DOWTYSEAL 1/2"
			USE WITH FITTING 23235300
3	248156	1	SEAL KIT 470.919040/DT
4	782857	1	VALVE COMPLETE ARDP6-750
5	784926	1	HY.HO.2TT25+E24FD+E24F90 L770
			TO TANK
6	784942	1	HYD.HOSE L=1585MM
7	786888	1	PLUG 3/8" BSP
8	786892	1	FITTING GE12LR1/2A3C
9	786893	1	HEX NIPPLE 3/8"X15L (DIN24)
10	786895	1	HEX NIPPLE X12L (DIN24)
11	786896	1	FITTING A10-LR3/8X
12	16300001	1	$$HYD TANK COLLECTOR BRACKET, ALP T4F
13	16594501	1	PRIORITY BLOCK BRACKET, ALPEVO
14	23235300	1	HEX NIPPLE 1/2"-13/16"
			USE WITH HOSE 78505603
14	78606401	1	FITTING, GE15LREDOMDA3C
			USE WITH HOSE 78562201
15	23235300	1	HEX NIPPLE 1/2"-13/16"
			USE WITH HOSE 78505703
15	78612401	1	FITTING GE18LR OMDA3C
			USE WITH HOSE 78479601
16	78101601	1	CYLINDER 90/40 C150 M22X250
17	78469301	1	HY.HO.1TA8+E24F90 0° L3970
			TO LADDER
18	78470201	1	HY.HO.1TA12+E24FD+E24F90 L1250
			TO BRAKING PEDAL S
19	78505603	1	HY.HO.1/2"L= 4850
			STR-STR
			CURRENT MODEL/TO BOOM HYD.BLOCK P
19	78562201	1	HY.HO.5/8"L= 8700MM
			STR-STR (DIN 24)
			EARLY MODELS/TO BOOM HYD.BLOCK P
20	78505703	1	HY.HO.1/2"L= 3950
			STR-90
			CURRENT MODEL/TO BOOM HYD.BLOCK
20	78479601	1	HY.HO.3/4"L= 8150MM
			STR-90 (DIN 24)
			EARLY MODELS/TO BOOM HYD.BLOCK
21	78512601	1	HY.HO.1TA12+E24F90+E24F45 L520
			TO OLD 19CC PUMP
21	78554801	1	HY.HO.1TA12+E24F90+E24F45 L1230
			TO 17CC PUMP - ALU BOOM
21	78555501	1	HY.HO.1TA12+E24F90 90° L2750
			TO 17CC PUMP - HAZ BOOM
22	78530401	1	HY.HO.1TA12+E24FD L1250
23	78530601	1	HY.HO.1TA8+E24F45+E24F90 L1490
24	78530801	1	HY.HO.1TA10+E24FD L1210
25	78531001	1	HY.HO.1TA10+E24FD+E24F90 L3850
26	78531101	1	HY.HO.1TA12+E24FD+E24F45 L1530
			TO TANK
27	78531401	1	HY.HO.1TA12+E24FD+E24F90 L960
			TO MANUAL VALVE
28	78533601	1	HY.HO.1TA10+E24F90 90°L500
			TO BRAKING PEDAL T
29	78537301	1	HY.HO.1TA12+E24FD L620
			TO FRONT BLOCK
30	78539101	1	HY.HO.1TA10+E24FD+E24F90 L900
31	78602401	1	FITTING GE28LRED 1"
32	78602701	1	PRESSURE GAUGE J1844424

Pos.	parts-n°	order qty	description
33	78606401	1	FITTING, GE15LREDOMDA3C
34	78606701	1	FIITING RED1815LA3C
35	78607101	1	FITTING GE10LREDOMDA3C Compl.
36	78612001	1	PLUG VSTI R 1/2" ED
37	78612501	1	FITTING GE18LR 3/4BA3C

DTZ BASIC HYDRAULIC
C0840-HIN, 05:06:19

Date 12.08.2020 11:36

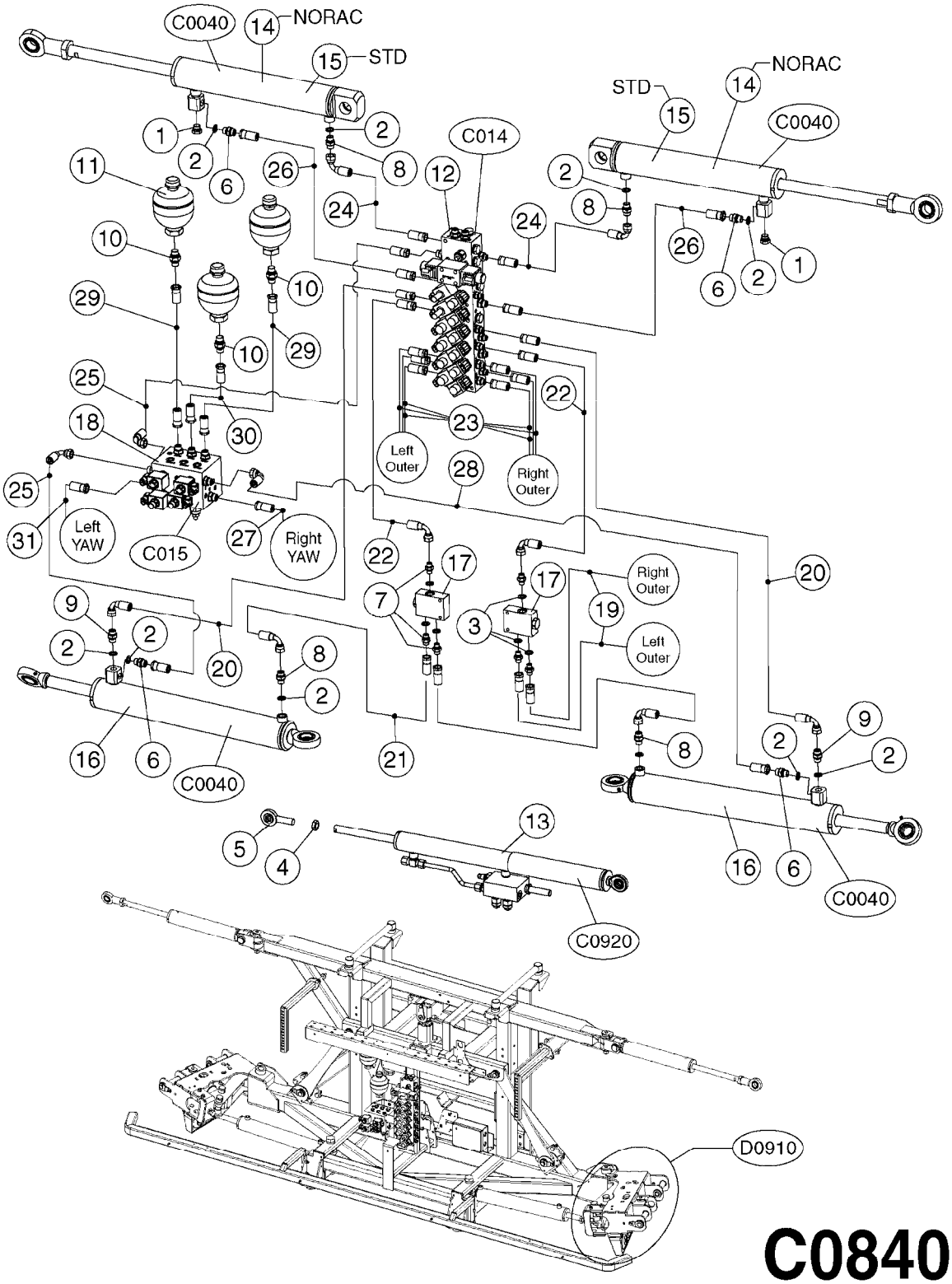

C0840

Agroparts: www.HARDI-INTERNATIONAL.com

DTZ BASIC HYDRAULIC
C0840-HIN, 05:06:19

Date 12.08.2020 11:36

Pos.	parts-n°	order qty	description
1	231924	1	PLUG 3/8'
2	240866	1	DOWTYSEAL 3/8"
3	241404	1	DOWTY SEAL 1/4"
4	461198	1	NUT HEX M16X2 JAMB
5	21091900	1	LINK HEAD M16 x D17 DELTA
6	23234300	1	HEX NIPPLE 3/8"-11/16"
7	23234500	1	HEX NIPPLE 1/4" - 9/16"
8	23235700	1	HEX NIPPLE 3/8"-9/16"
9	23236800	1	HEX NIPPLE 3/8"-9/16" - 1.2mm
10	23246100	1	HEX NIPPLE 11/16" ORFS X M18
11	28160800	1	ACCUMULATOR 0.5L
12	73024800	1	HYD. BLOCK DDZ 3-FOLD
13	78126000	1	CYLINDER,DAMPNER,LOCKING
14	78132800	1	DOB.CYL.Ø70/30-360/M30 SPEC.
15	78132900	1	DOB.CYL.Ø70/30-280/M30 SPEC.
16	78134800	1	DOB.CYL.Ø70/30-436/ Ø30 ADJ. DAMP
17	78219600	1	FLOW DIVIDER FTZ '13
18	78220800	1	HYD. BLOCK DDZ ANTI-YAW
19	78500100	1	HY.HO.1/4"L= 3000 STR-90°
20	78500300	1	HY.HO.1/4"L= 1200 STR-90°
21	78501400	1	HY.HO.1/4"L= 750 STR-90°
22	78504100	1	HY.HO.1/4"L= 450 STR-90°
23	78506403	1	HY.HO.1/4"L= 2700 STR-STR
24	78514100	1	HY.HO.1/4"L= 2080 STR-90°
25	78560100	1	HY.HO.3/8"L= 900 STR-90°
26	78562100	1	HY.HO.3/8" L= 2400 STR-STR
27	78562300	1	HY.HO.3/8"L= 2150 STR-STR
28	78563700	1	HY.SL.3/8" L= 1450 STR-90°
29	78568100	1	HY.HO.3/8"L= 600 STR-STR
30	78568200	1	HY.HO.3/8"L= 390 STR-STR
31	78568300	1	HY.SL.3/8" L= 1500 STR-STR

	Agroparts: www.HARDI-INTERNATIONAL.com	
HARDI	DTZ 3 FOLD HYD.OUTER 120'/132' C0850-HIN, 05:06:17	Page 0 Date 12.08.2020 11:36

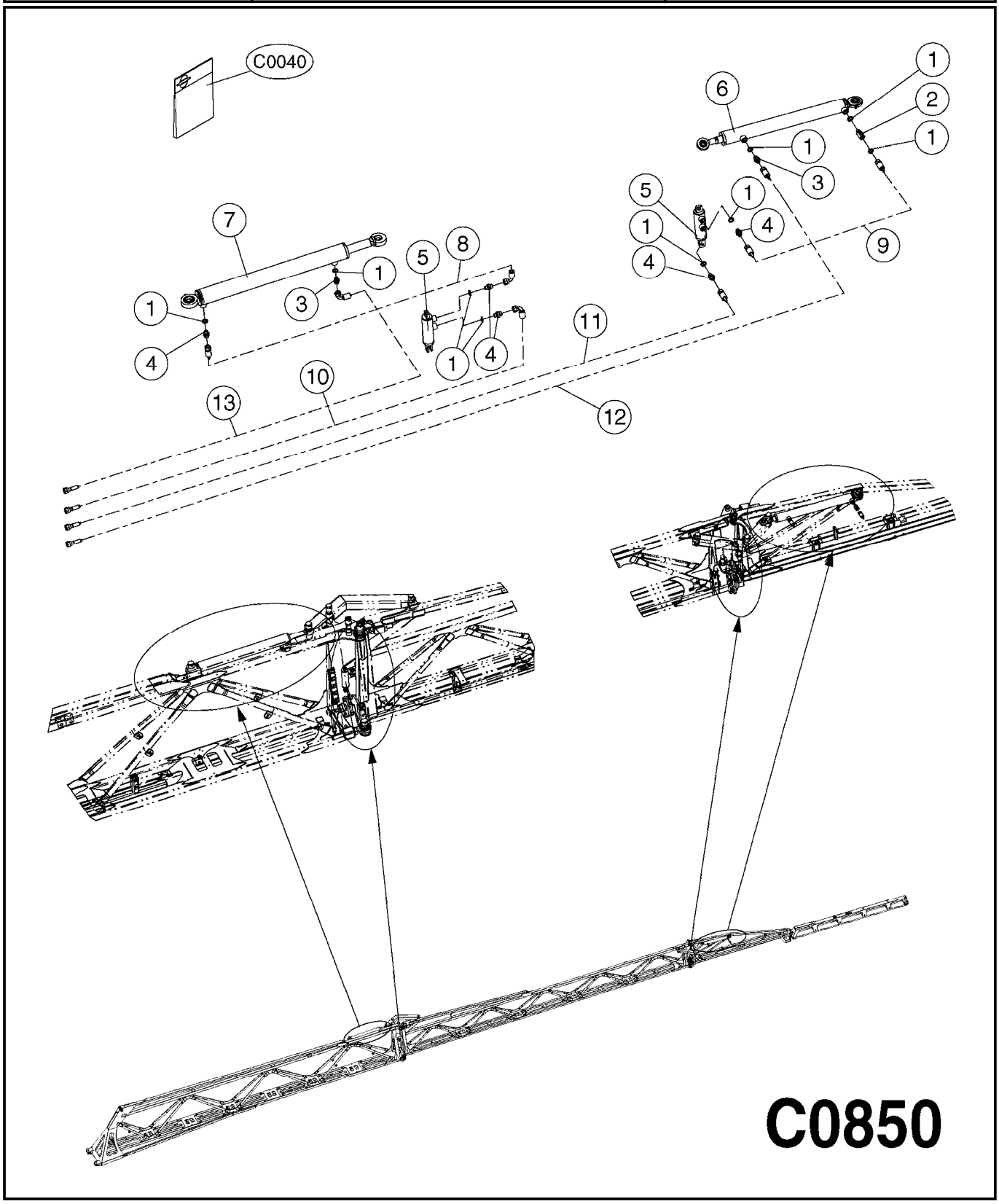

Agroparts: www.HARDI-INTERNATIONAL.com

DTZ 3 FOLD HYD.OUTER 120'/132'
C0850-HIN, 05:06:17

Date 12.08.2020 11:36

Pos.	parts-n°	order qty	description
1	241404	1	DOWTY SEAL 1/4"
2	782097	1	HEX NIPPLE 1/4" ONE-WAY 0.55MM
3	23234100	1	HEX NIPPLE 1/4"-9/16" - 1.2mm
4	23234500	1	HEX NIPPLE 1/4" - 9/16"
5	78127800	1	HYDRAULIC CYLINDER 25-40
6	78133100	1	DOB.CYL.Ø40/25-375/M20-Ø20
7	78133300	1	DOB.CYL.Ø50/30 500 END DAMPING
8	78502700	1	HY. HO.1/4"L= 1550 STR-90°
9	78511100	1	HY.HO.1/4"L= 1450 90°-90° A=270
10	78521400	1	HY.HO.1/4"L= 6350 STR-STR
11	78521600	1	HY.HO.1/4"L=12350 STR-90°
12	78521700	1	HY.HO.1/4"L=13100 STR-90°
13	78528000	1	HY.HO.1/4"L= 6150 STR-90°

	Agroparts: www.HARDI-INTERNATIONAL.com	
HARDI	DTZ 2 FOLD HYD.OUTER 90' C0860-HIN, 06:06:17	Page 0 Date 12.08.2020 11:36

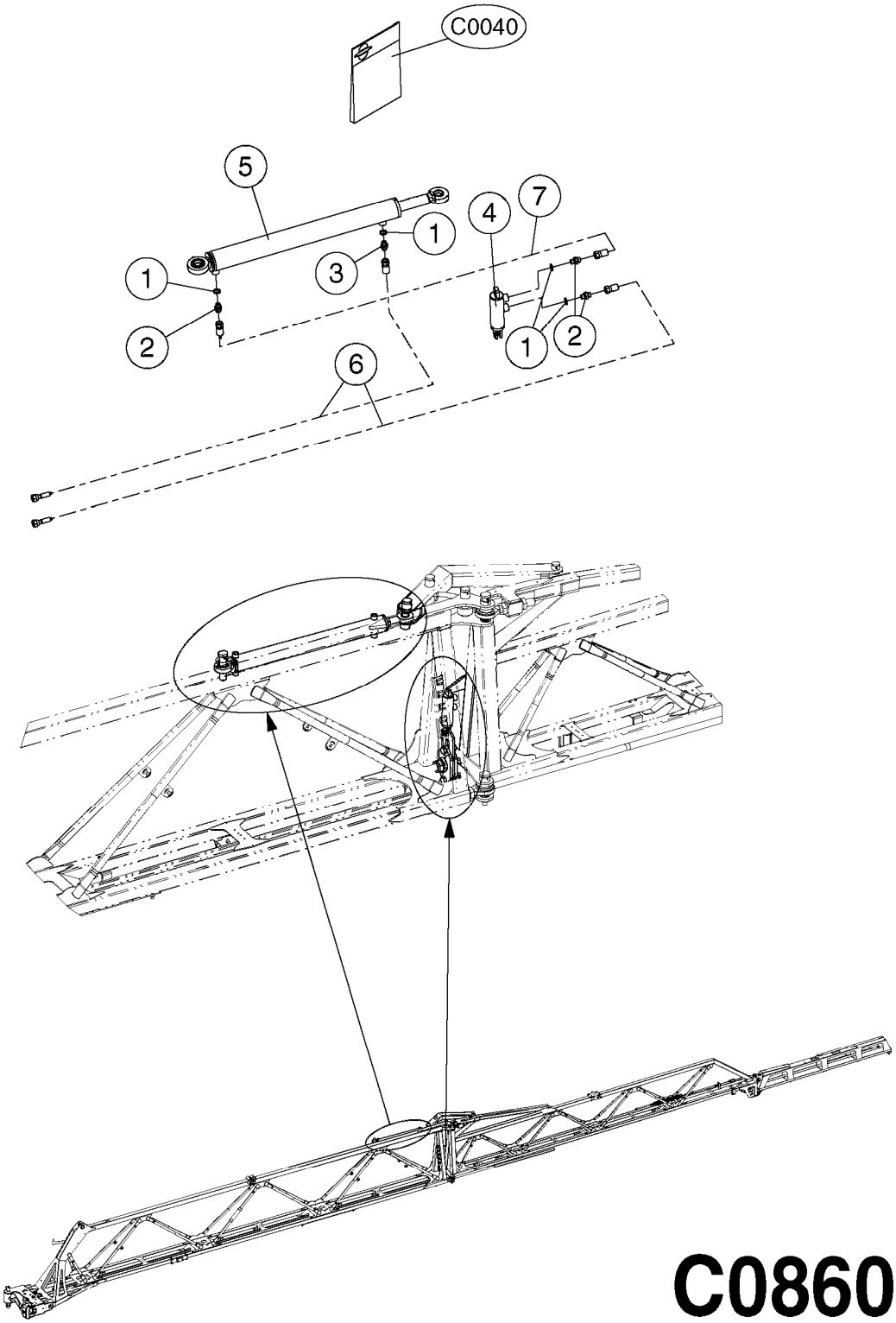

Agroparts: www.HARDI-INTERNATIONAL.com

DTZ 2 FOLD HYD.OUTER 90'
C0860-HIN, 06:06:17

Date 12.08.2020 11:36

Pos.	parts-n°	order qty	description
1	241404	1	DOWTY SEAL 1/4"
2	23234500	1	HEX NIPPLE 1/4" - 9/16"
3	23235600	1	HEX NIPPLE 1/4"-9/16" - 0.9mm
4	78127800	1	HYDRAULIC CYLINDER 25-40
5	78133300	1	DOB.CYL.Ø50/30 500 END DAMPING
6	78509700	1	HY.HO.1/4"L= 6000 STR-STR
7	78509900	1	HY.HO.1/4"L= 1500 STR-STR

CM/NAV HYD. PARALIFT
C0870-HIN, 14:05:19

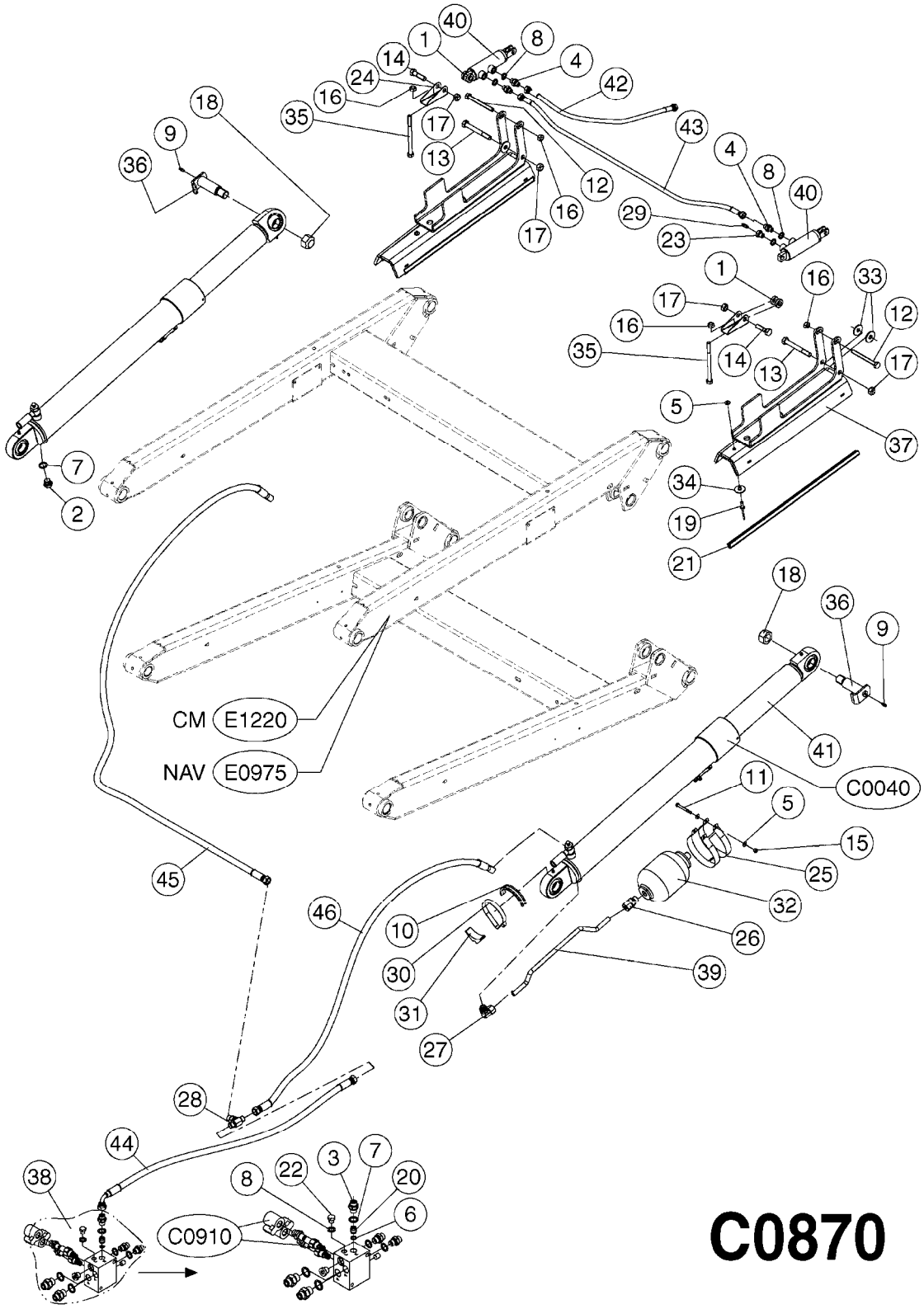

C0870

Agroparts: www.HARDI-INTERNATIONAL.com

CM/NAV HYD. PARALIFT
C0870-HIN, 14:05:19

Date 12.08.2020 11:36

Pos.	parts-n°	order qty	description
1	146240	1	BUSHING D26.0/13.0 L=7MM
2	146790	1	PLUG 3/8" RG L=20 SS
3	146836	1	HEX NIPPLE 3/8"X3/8" BSP
4	146845	1	HEX NIPPLE 1/4"X1/4"
5	163936	1	WASHER D15/D6.2X1
6	240041	1	O-RING D15.1/10.3 X 2.4
7	240866	1	DOWTYSEAL 3/8"
8	241404	1	DOWTY SEAL 1/4"
9	283699	1	GREASE NIPPLE M6X1
10	341301	1	RUBBER HOSE CLAMP COVER 230MM
11	411008	1	BOLT HEX 8.8 DEL M6X55
12	421061	1	BOLT HEX 8.8 DEL M10X100 DIN931
13	430367	1	BOLT HEX 8.8 DEL M12X100 DIN931
14	430878	1	BOLT HEX 8.8 DEL M12X45 DIN931
15	460261	1	NUT HEX M6X1.00 LOCK DIN985 A2 SS
16	460423	1	NUT HEX M10X1.50 LOCK DIN985A2 SS
17	460703	1	NUT HEX M12X1.75 LOCK DIN985A2 SS
18	460747	1	NUT HEX M24 LOCK
19	480816	1	RIVET Ø4.8X19.0/Ø14
20	782062	1	NON-RETURN VALVE UTV 3/8"
21	981590	1	EDGE GUARD 6-8MM X 12"
22	14010400	1	PLUG 1/4" BSP
23	14090800	1	PLUG, 1/4" W/M8 HOLE
24	15142300	1	BRACKET, LOCK CYLINDER, TDZ
25	16277700	1	PLATE 1 X 100 X 291
26	23233900	1	HEX NIPPLE M18X1.5 - M18X1.5
27	23234000	1	ELBOW 90* 3/8 M18X1.5
28	23240800	1	TEE 11/16"-11/16"-11/16" ORFS
29	28076000	1	BLEED SCREW M8
30	28091200	1	CLAMP GEAR D25-100 B=12.7 SS
31	28098800	1	TUBE HOLDER F. SUS. PARALIFT ACUM.
32	28103700	1	ACCUMULATOR 170 BAR TDZ PARALI
33	39122500	1	DISC D36, HOLE D12.5 T=3
34	39131100	1	WASHER 32X5 T=15
35	42126800	1	BOLT HEX 8.8 DEL M10X140
36	61061200	1	PIN, Ø30/M24 L=105
37	61063700	1	PARALIFT HYD LOCK, L=526, RED
37	61079900	1	PARALIFT HYD LOCK, L=420, RED
38	72286200	1	HYD. BLOCK COMP. PARA-LIFT NCM CM 8500/10000, NAV 4500/6200
38	72809300	1	PARALIFT HYD.BLOCK ASSY.CM'11 CM 4500/5500/7000
39	72927000	1	HYD. TUBE, MOUNTED, PARALIFT SUS, '13
40	78127800	1	HYDRAULIC CYLINDER 25-40
41	78131200	1	PLUNGECYLINDER 70/838 2X30
42	78508800	1	HY.HO.1/4"L= 2200 STR-STR
42	78512100	1	HY.HO.1/4"L= 1250 STR-90°
43	78517600	1	HY.HO.1/4"L= 930 STR-STR
44	78560100	1	HY.HO.3/8"L= 900 STR-90°
45	78560200	1	HY.HO.3/8"L= 2000 STR-3/8BAN
46	78560300	1	HY.HO.3/8"L= 1250 STR-3/8BAN CM MODELS
46	78565000	1	HY.HO.3/8"L= 1400 STR-BANJO NAV MODELS

HYD. DRIVE PUMP 464H
C0880-HIN, 17:08:17

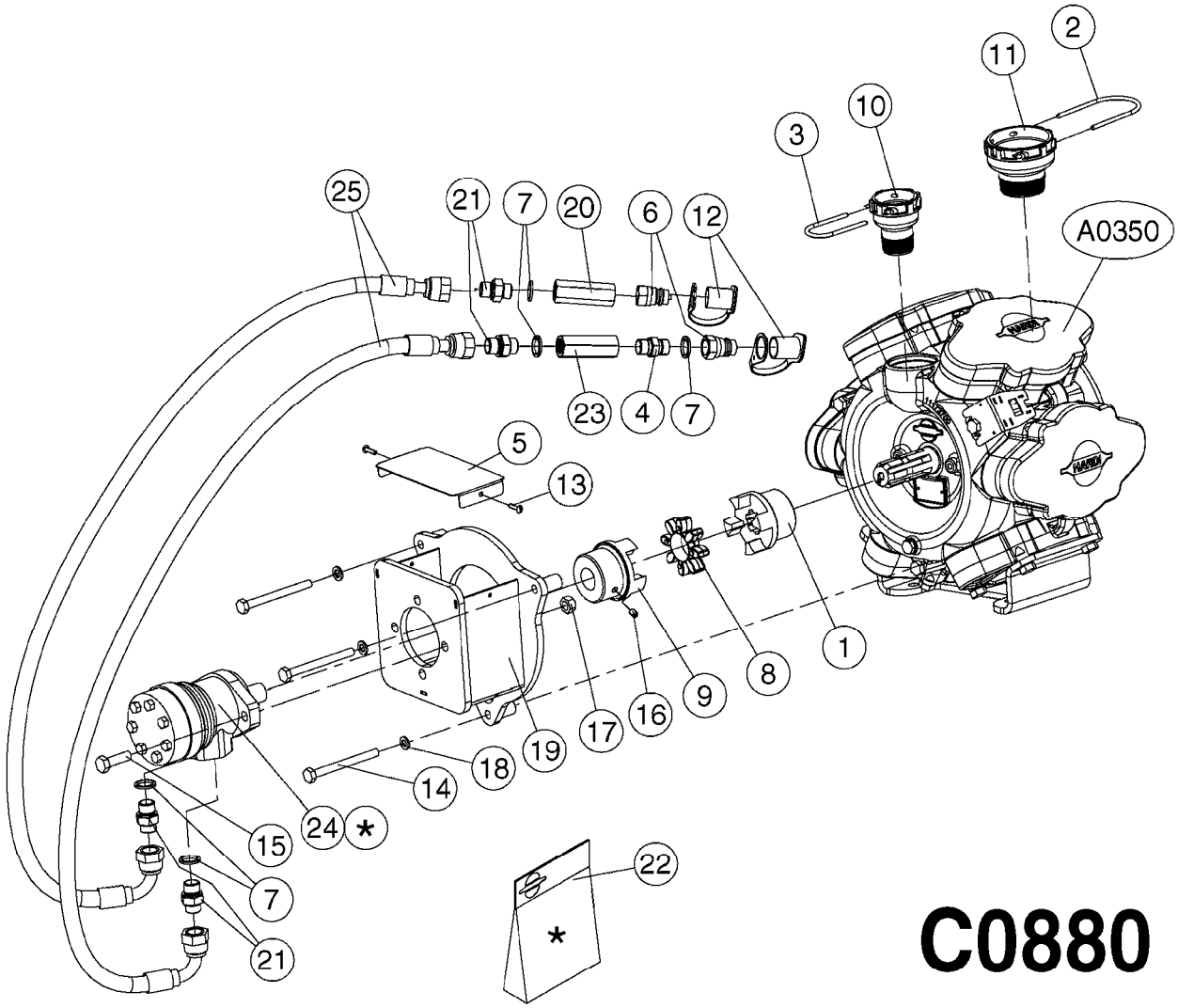

C0880

Agroparts: www.HARDI-INTERNATIONAL.com

HYD. DRIVE PUMP 464H
C0880-HIN, 17:08:17

Date 12.08.2020 11:36

Pos.	parts-n°	order qty	description
1	111438	1	HUB F.CLUTCH 361/460 PUMP
2	145996	1	FITT.DK S-67 FORK
3	145997	1	FITT.DK S-93 FORK
4	147132	1	HEX NIPPLE 1/2"X1/2" BSP DEL
5	160212	1	PLATE 1.0 X 90 X 210
6	230311	1	QUICK COUPLING 1/2"
7	241356	1	DOWTYSEAL 1/2"
8	283916	1	TOOTHED RIM FOR CLUTCH
9	284521	1	COUPLING HALF CYL.D25MM-KEY
10	322322	1	FITT.DK S-67 X 1-1/4"BSP MALE
11	322324	1	FITTING S93 FEMALE - BSP 2" MALE
12	334206	1	DUST HOOD FOR HY-COUPLING
13	410664	1	BOLT HEX M5 X 20
14	421214	1	BOLT HEX 8.8 DEL M10X110
15	430721	1	BOLT HEX 8.8 DEL M12X40 FT
16	450052	1	SCREW SET M8X10 BLACK ALLAN
17	460703	1	NUT HEX M12X1.75 LOCK DIN985A2 SS
18	470127	1	WASHER D15D10X2 M10 LOCK
19	637112	1	MOUNT BRACKET F.HYD MOTOR 463
20	782154	1	CHECK VALVE 284794 (BLACK)
21	23235300	1	HEX NIPPLE 1/2"-13/16"
22	28126100	1	SEAL KIT FOR OMR MOTOR
23	78219800	1	HY. PRES. COMP. FLOW V., 1/2", 36L/MIN, PAINTED
24	78303700	1	HY. MOTOR OMR65, PAINTED
25	78503403	1	HY. HO.1/2"L=5100/STR-90 NAVIGATOR
25	78503803	1	HY.HO.1/2"L= 2300 STR-90° CM 55/7000
25	78504103	1	HY.HO.1/2"L= 2085 STR-90° CM 4500

	Agroparts: www.HARDI-INTERNATIONAL.com	
HARDI	HYD.LEG WIDENING 2017 C0890-HIN, 06:12:17	Page 0 Date 12.08.2020 11:36

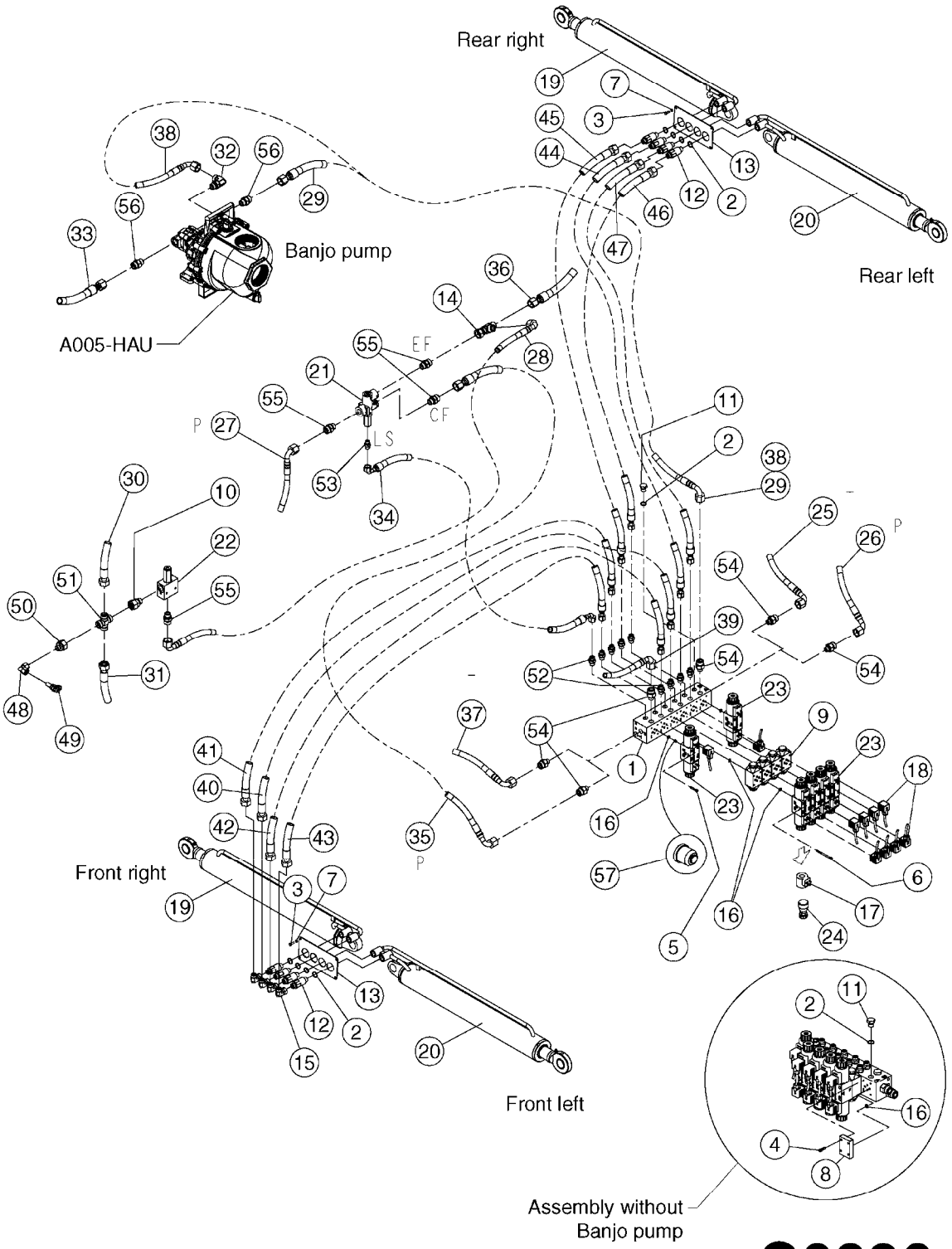

C0890

Agroparts: www.HARDI-INTERNATIONAL.com

HYD.LEG WIDENING 2017
C0890-HIN, 06:12:17

Date 12.08.2020 11:36

Pos.	parts-n°	order qty	description
1	146150	1	HYD. MANIFOLD BLOCK 6 STATIONS
2	240866	1	DOWTYSEAL 3/8"
3	418010	1	BOLT HEX M5X16 SS 8.8 DIN933
4	458037	1	BOLT CAP HEAD M5X20 SS A2
5	458038	1	BOLT CHC 8.8 DEL M5X30/22
6	458040	1	BOLT CAP HEAD M5X70/22 SS A4
7	478083	1	WASHER W5 DIN127B A2
8	782834	1	CLOSING PLATE F. HYD. MANIFOLD HIPF3
9	782866	1	CONTROLLED DOUBLE-VALVE
10	786776	1	FITTING EGE18PLREDA3C
11	786888	1	PLUG 3/8" BSP
12	14033001	1	FITTING G3/8"-11/16"UNF
13	16755501	1	DOOR FOR HTA AXLE ACCESS SARITOR
14	23007203	1	1'' SWIVEL NUT RUN TEE
15	23241800	1	HYD.FIT. M-F 90° 11/16"-11/16"
16	24001401	1	O-RING 1.78 x 8.73
17	26038001	1	SOLENOID SDHE SP-COE-12DC/10
18	76009301	1	PLUG+CABLE L1.5M+2CONTAC
19	78106401	1	CYLINDER, 70/40, C550, RIGHT SARITOR AXLE
20	78106501	1	CYLINDER 70/40, 550, LEFT SARITOR AXLE
21	78201901	1	PRIORITY VALVE, OLS 80, DYNAMIC 7B, SARITOR
22	78202901	1	RELIEF VALVE, 180B, W/HOUSING, SARITOR
23	78203101	1	DIRECTIONAL CONTROL VALVE 4/3, SDHE 0713-x12DC
24	78203501	1	MANUAL OVERRIDE WITH DETENT FOR SDHE
25	78500901	1	HY.HO.ITA12 ORFS1'' F90+F90 L4160
26	78501001	1	HY.HO.ITA12 ORFS1'' F90+F90 L4230
27	78513701	1	HYDRAULIC HOSE 1TA12 ORFS1" F90+F90 L400
28	78513801	1	HY.HO.1TA12 ORFS1" F90+F90 L1105
29	78519701	1	HY.HO.1TA12 ORFS1" FD+F90 L1170
30	78523401	1	HOSE PUMP 19CC TO RELIEF VALVE L=530
31	78523501	1	HY.HO.ITA16+E24FD+E2F90 L=450
32	78530001	1	HY.HO.1TA16+E24FD+E24F90 L2750
33	78546101	1	HY.HO.1TA12 ORFS1" FD+F90 L1550
34	78564001	1	HY.HO.1TA8 ORFS11/16 FD+F90 L1305
35	78564801	1	HY.HO.1TA12 ORFS1" F90+F90 L1230
36	78564901	1	HY.HO.1TA12 ORFS1" F90+F90 L890
37	78565001	1	HY.HO.1TA12 ORFS1" F90+F90 L715
38	78565101	1	HY.HO.1TA12 ORFS1" F45+F90 L2285
39	78565301	1	HY.HO.1TA12 ORFS1" FD+FD L660
40	78580101	1	HY.HO.1TA8 ORFS 11/16FD L2630
41	78580201	1	HY.HO.1TA8 ORFS 11/16FD L2110
42	78580301	1	HY.HO.1TA8 ORFS 11/16FD L2580
43	78580401	1	HY.HO.1TA8 ORFS 11/16FD L2080
44	78580501	1	HY.HO.1TA8 ORFS 11/16FD L4680
45	78580601	1	HY.HO.1TA8 ORFS 11/16FD L4090
46	78580701	1	HY.HO.1TA8 ORFS 11/16FD L4640
47	78580801	1	HY.HOSE 1TA8 ORFS 11/16FD L4070
48	78606901	1	FITTING EW12L OMDA3C
49	78607001	1	TEST PRESSURE PORT M18X1.5 (12L)-M16X2.00
50	78610001	1	FITTING RED1812LA3C
51	78610301	1	FITTING K18LA3C
52	78615001	1	NIPPLE ORFS UNF11/16"-BSP3/8"
53	78615101	1	HEX NIPPLE 1/4" - 11/16"
54	78616901	1	HEX NIPPLE 3/8"-1"
55	78617001	1	HEX NIPPLE 1/2" - 1"
56	78620701	1	UNION MALE ORFS-DN12-15L/
57	78627001	1	PLUG-H-00

HYD. CIRCUIT STEERING - RUBICON
C0900-HIN, 21:02:19

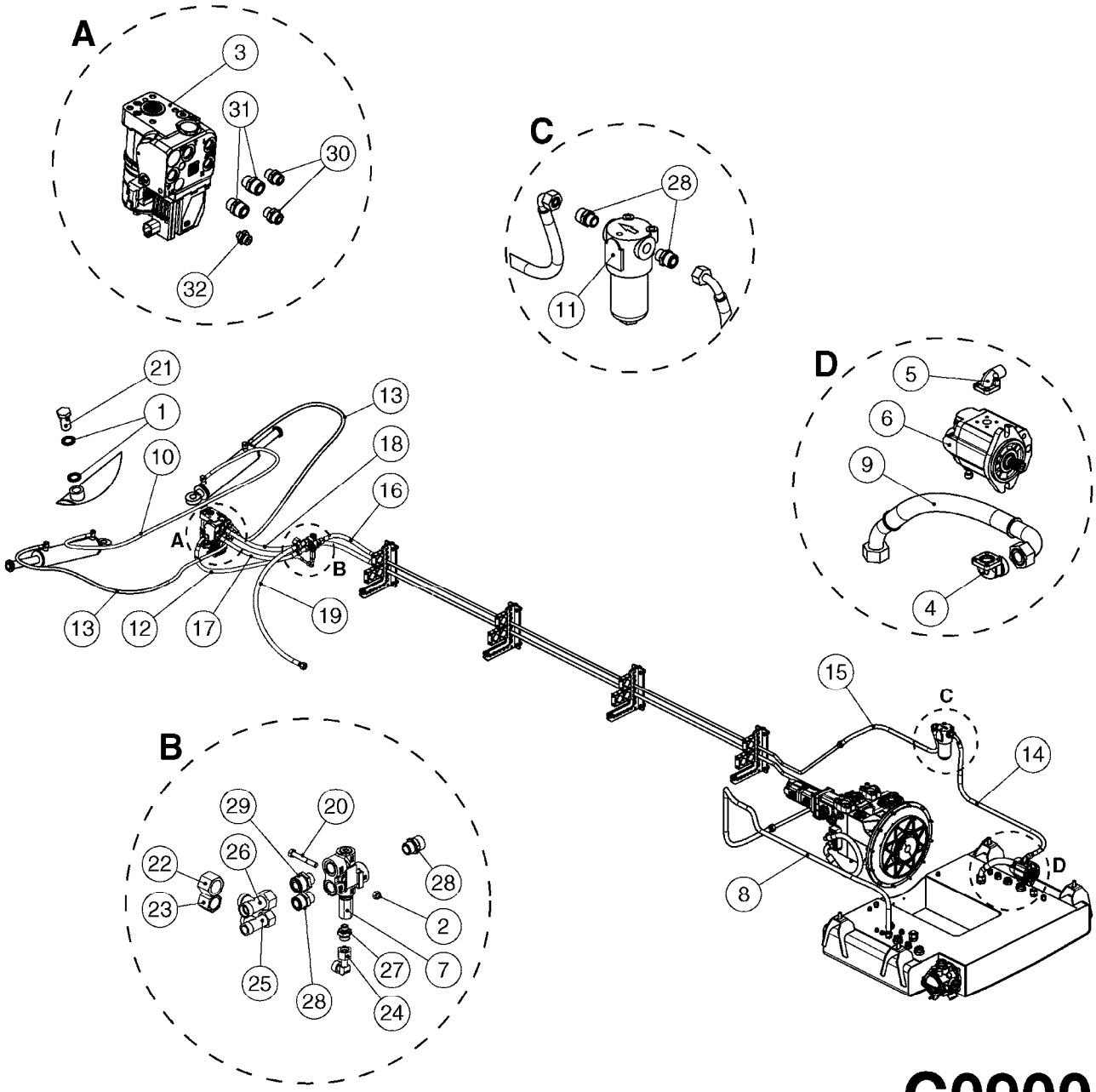

C0900

Agroparts: www.HARDI-INTERNATIONAL.com

HYD. CIRCUIT STEERING - RUBICON
C0900-HIN, 21:02:19

Date 12.08.2020 11:36

Pos.	parts-n°	order qty	description
1	240866	1	DOWTYSEAL 3/8"
2	460143	1	LOCK NUT M8 SST A2 DIN985
3	78207501	1	STEERING VALVE CAN BUS 60/200 LS 20
4	MA161115000	1	FLANGE MALE 28 L 90° X 40
5	MA161203000	1	FLANGE MALE 15L ELBOW 90 X 35
6	MA504020040	1	GEAR PUMP 19CC W/RESTRICTOR
7	MA509002004	1	VALVE, PRIORITY - OLS 40
8	MA511350304	1	HY.HO. 5/8" L=2260 STR-STR
9	MA511371803	1	HY.HO. 1" R4 L=340 45°-90°
10	MA511901901	1	HY.HO. 3/8" L=9030 2XBANJO
11	MA520001009	1	PRESSURE FILTER 87 L/MIN
12	MA521111001	1	HY.HO. 5/16" L=810 90°-90°
13	MA521120502	1	HY.HO. 3/8" L=2920 ORFS 13/16" 90°-BANJO
14	MA521130001	1	HY.HO. 1/2" L=1110 STR-90°
15	MA521130101	1	HY.HO. 1/2" L=980 STR-90°
16	MA521130201	1	HY.HO. 1/2" L=290 ORFS 1"STR-CS13 STR
17	MA521130301	1	HY.HO. 1/2" L=520 2XORFS 1" STR
18	MA521141601	1	HY.HO. 5/8" L=1110 STR-STR
19	MA521141701	1	HY.HO. 5/8" L=1110 STR-STR
20	MA701001092	1	BOLT H M8X60 8.8 ZB 931
21	MA710072001	1	BANJO BOLT G 3/8"
22	MA710077001	1	PLUG FEMALE ORFS 1-3/16"
23	MA710077003	1	PLUG FEMALE ORFS 1"
24	MA710214001	1	ELBOW ADAPTER ORFS 11/16"
25	MA710239003	1	TEE SWIVEL ORFS 1"
26	MA710239004	1	TEE ORFS 1-3/16"
27	MA710252001	1	UNION ORFS11/16" X BSPP 8.13
28	MA710252008	1	UNION 1" ORFS X 15.21 BSPP
29	MA710252010	1	UNION 1-3/16" ORFS X 15.21 BSPP
30	MA710253004	1	FITT.UNION ORFS 13/16" X 18 X 150
31	MA710253006	1	FITT. ADAPTER ORFS 1" 22 X 150
32	MA710253007	1	FITT. ADAPTER ORFS 11/16" 12 X 1.5

CANNOT MIX SOLENOID VALVES AND COILS
IF IN DOUBT, ORDER COMPLETE SET (4)

CURRENT STYLE (2018)

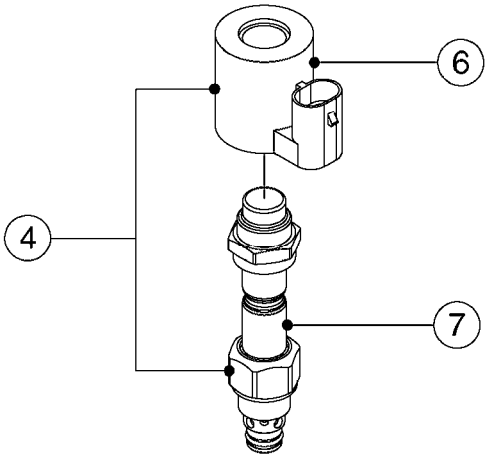

OLD STYLES (PRE 2018)

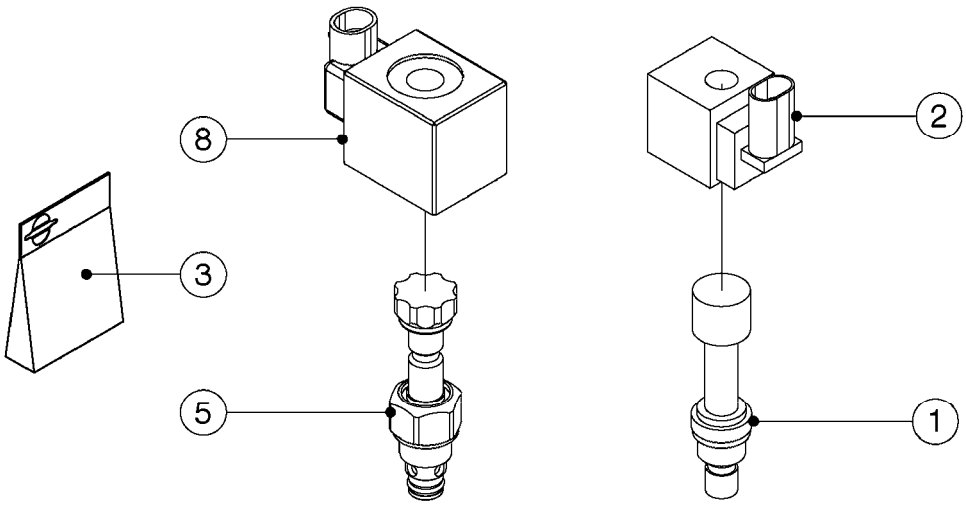

C0910

Agroparts: www.HARDI-INTERNATIONAL.com

HYDRAULIC SOLENOIDS
C0910-HIN, 13:05:19

Date 12.08.2020 11:36

Pos.	parts-nº	order qty	description
1	782129	1	SOLENOID VALVE 25L, 3/4"NC
2	782135	1	SOLENOID W. AMP F.VALVE 782129
3	28100800	1	SEAL KIT F. 782129/78215500 PRE 2018 ONLY
4	75586600	1	SOLENOID VALVE NC, + COIL
5	78215500	1	HY SOLENOID VALVE 40L 3/4"NC
6	78222700	1	COIL W. AMP
7	78222800	1	SOLENOID VALVE NC, DOUBLE LOCK
8	78602100	1	MAGNET M.AMP/DIODE KIT 08

HARDI	**Agroparts: www.HARDI-INTERNATIONAL.com**	
	HYD. DAMPER, LOCKING CYLINDER C0920-HIN, 05:06:19	Page 0
		Date 12.08.2020 11:36

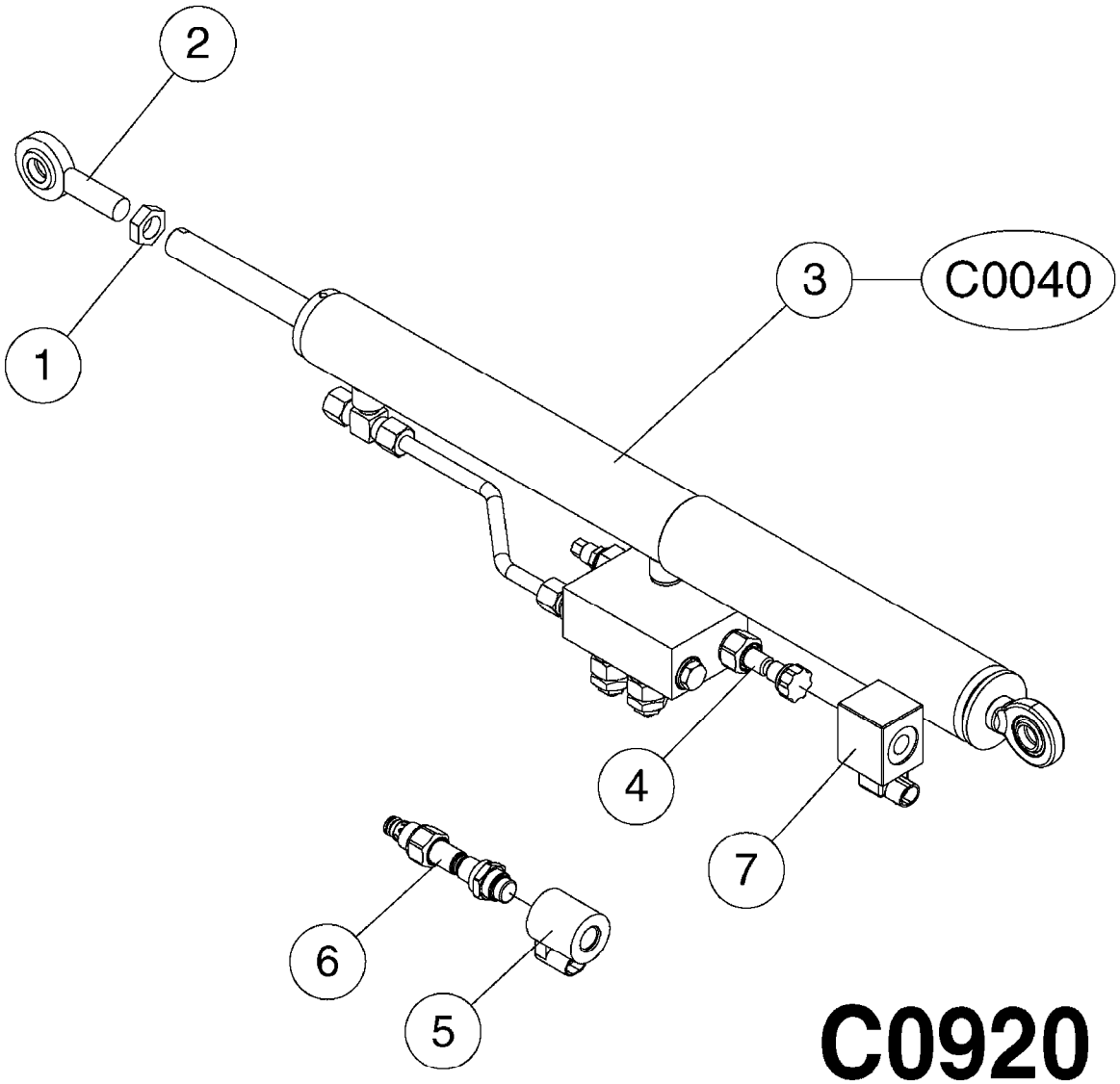

Agroparts: www.HARDI-INTERNATIONAL.com

HYD. DAMPER, LOCKING CYLINDER
C0920-HIN, 05:06:19

Date 12.08.2020 11:36

Pos.	parts-nº	order qty	description
1	461198	1	NUT HEX M16X2 JAMB
2	21091900	1	LINK HEAD M16 x D17 DELTA
3	78126000	1	CYLINDER,DAMPNER,LOCKING
4	78215500	1	HY SOLENOID VALVE 40L 3/4"NC PRE 2019
5	78222700	1	COIL W. AMP POST 2019
6	78223000	1	SOLENOID VALVE NC, PUSH/TWISH OVERRIDE, DOUBLE LOC POST 2019
7	78602100	1	MAGNET M.AMP/DIODE KIT 08 PRE 2019

HYD. FOLD CYLINDER TDZ
C0930-HIN, 21:08:19

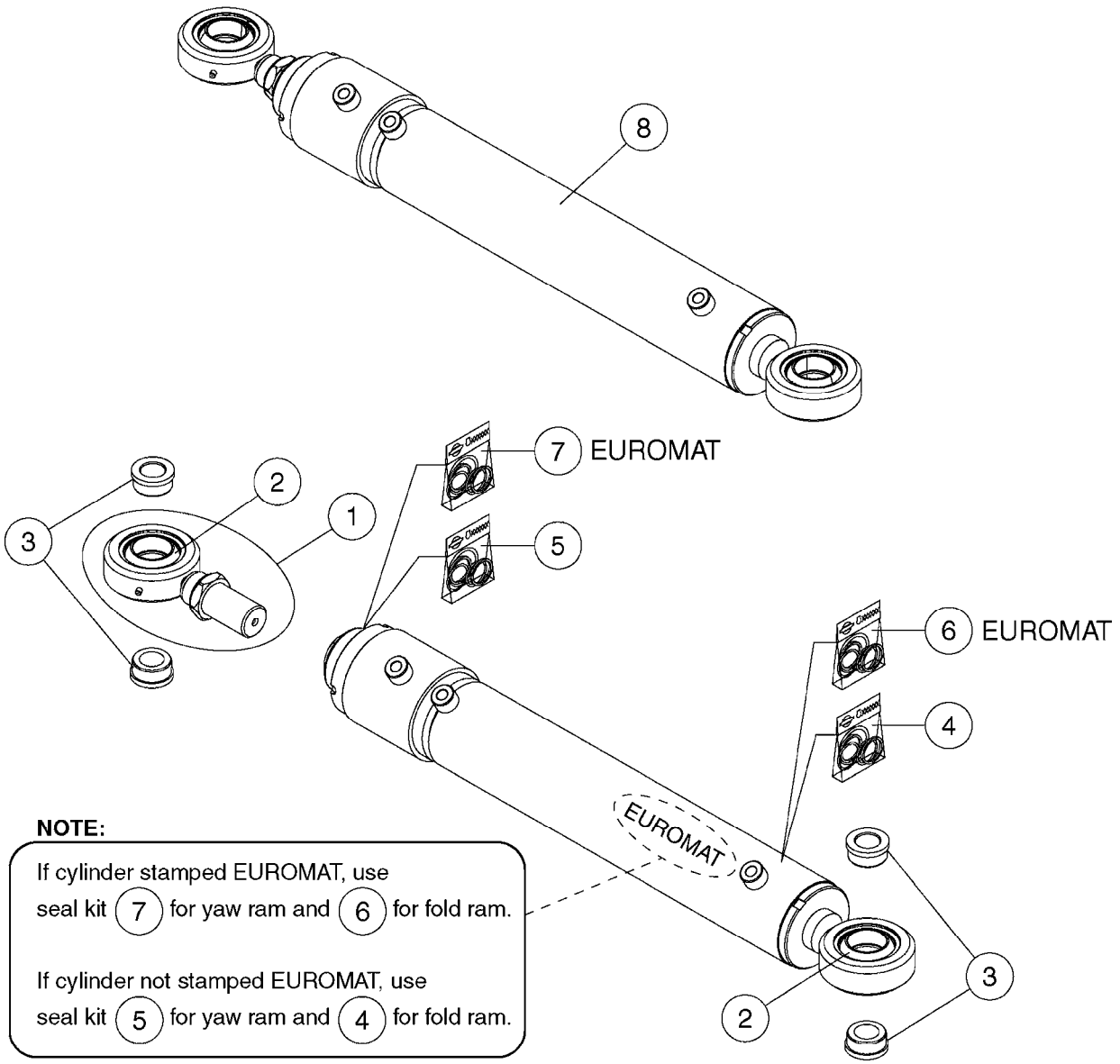

NOTE:

If cylinder stamped EUROMAT, use seal kit 7 for yaw ram and 6 for fold ram.

If cylinder not stamped EUROMAT, use seal kit 5 for yaw ram and 4 for fold ram.

C0930

Agroparts: www.HARDI-INTERNATIONAL.com

HYD. FOLD CYLINDER TDZ
C0930-HIN, 21:08:19

Date 12.08.2020 11:37

Pos.	parts-nº	order qty	description
1	21002803	1	SWIVEL TIE ROD END M36 W.JAM NUT
2	21006904	1	ARTICULATED BEARING W CIRCLIPS (FOR 21002803)
3	21056204	1	BUSHING REDUCTION Ø40/Ø30.2 L=22
4	75000704	1	SEAL KIT F.CYL 78513204 (DE80/45C380)
5	75000804	1	SEAL KIT F.CYL 78513204 (SE70C40)
6	75000904	1	SEAL KIT F.CYL 78513204 (DE80/45C380)
7	75001004	1	SEAL KIT F.CYL 78513204 (SE70C40)
8	78513204	1	CYLINDER 80/45 L= 380 WITH DAMP

Section D

Booms

main group	page-n°	date	description
Booms, Nozzle Bodies & Tubes			
	D0010-HIN	01:01:16	BOOM - 6' FOLDING
	D0020-HIN	19:08:19	BOOM - 14' HD
	D0030-HIN	01:01:16	BOOM - V-II
	D0040-HIN	01:01:16	BOOM - VS-8 & VS-10
	D0050-HIN	01:01:16	BOOM - 1 ROW B11
	D0060-HIN	18:12:19	BOOM - SB 20' 26' 33' 40'
	D0070-HIN	01:01:16	BOOM - SB H-FRAME & CENTER HY
	D0080-HIN	01:01:16	BOOM - 2 ROW GRAPE B20-MA
	D0090-HIN	01:01:16	BOOM - 2 ROW GRAPE B20-HY
	D0100-HIN	01:01:16	REAR DROP ARMS-2 ROW GRAPE B20
	D0110-HIN	01:01:16	BOOM - 2 ROW B40 HZ CENTER
	D0120-HIN	01:01:16	BOOM - 2 ROW B40 HZ OUTER
	D0125-HIN	11:12:17	BOOM - 2 ROW IRIS
	D0130-HIN	26:07:16	BOOM - MB 35' 40' 42'
	D0140-HIN	26:07:16	BOOM - MB 45' 50'
	D0150-HIN	01:01:16	BOOM - MB H-FRAME ML-TRAILER
	D0160-HIN	01:01:16	BOOM-MB H-FRM 35'42' WL SKD MT
	D0170-HIN	01:01:16	BOOM-MB H-FRM 45' 50' WL TRLR
	D0180-HIN	31:03:16	BOOM - MB H-FRAME HL
	D0190-HIN	01:01:16	BOOM - MB 3-PT HITCH FRAME
	D0200-HIN	01:01:16	BOOM - MB ATV 40'
	D0210-HIN	01:01:16	BOOM - MB AIR SUSPSN (HL ONLY)
	D0220-HIN	01:04:19	BOOM FALCON H FRAME & CENTER
	D0225-HIN	01:04:19	BOOM FALCON PARALIFT CENTER
	D0230-HIN	01:01:16	BOOM FALCON WINGS 42',45',50'
	D0240-HIN	01:01:16	TRANSP.BRACKETS-FALCON NEW NAV
	D0250-HIN	01:01:16	PASTURE BOOM DUAL NOZZLE BRACKET
	D0255-HIN	11:12:19	PASTURE BOOM SINGLE NOZZLE BRACKET
	D0260-HIN	01:01:16	BOOM EAGLE WINGS 45' 50'
	D0270-HIN	01:01:16	BOOM EAGLE WINGS 60' 66'
	D0280-HIN	01:01:16	BOOM EAG H-FRAME/CENTER 45-66'
	D0290-HIN	01:01:16	BOOM EAG H-FRAME/CENTER 45-66'
	D0300-HIN	01:01:16	BOOM COMMANDER CENTER 45-66'DK
	D0310-HIN	01:01:16	BOOM COMMANDER CENTER 45-66'US
	D0320-HIN	15:11:17	BOOM COMMANDER CENTER 80-90'
	D0330-HIN	10:01:18	BOOM EAGLE WINGS 3PT 60'
	D0340-HIN	01:01:16	BOOM EAGLE 3PT CENTER SECTION
	D0350-HIN	01:01:16	BOOM EAGLE 3PT CENTER STAND
	D0360-HIN	01:01:16	BOOM MEGA H-FRAME & CENTER
	D0370-HIN	31:05:17	BOOM EAGLE WINGS 80',88',90'
	D0380-HIN	16:11:17	BOOM EAG H-FRAME/CENTER 80-90'
	D0390-HIN	26:09:19	BOOM SPC PARAL.CTR.80-100' DK
	D0400-HIN	05:05:20	BOOM - SPC INNER WING 80-100'
	D0410-HIN	06:05:20	BOOM - SPC OUTER WING 80-100'
	D0420-HIN	16:11:17	BOOM-SPC H-FRAME CTR.80-100 DK
	D0430-HIN	16:11:17	BOOM-SPC H-FRAME CTR.80-100 US
	D0440-HIN	26:09:19	BOOM SPC PARAL.CTR.80-100' US
	D0450-HIN	01:01:16	BOOM CABLE KIT SPC 80'-90'
	D0460-HIN	28:04:20	BOOM SPC OUTER 90/60' DUALFOLD
	D0470-HIN	07:02:19	BOOM SPC CENTER 120/90'
	D0480-HIN	08:05:19	BOOM SPC INNER 120/90'DUALFOLD
	D0490-HIN	11:10:17	BOOM SPC OUTER 120/90'DUALFOLD
	D0500-HIN	21:02:17	SPC PLUMB.BRACKETS - T25
	D0510-HIN	01:01:16	TRANSPORT BRACKETS-EAGLE BOOM
	D0520-HIN	01:01:16	TRANS.BRKTS-SPB NEW NAV PRE03
	D0530-HIN	01:01:16	TRANS.BKTS SPB/C NEW NAV 03
	D0540-HIN	01:01:16	TRANSPORT BRACKETS - CM/CM+

main group	page-n°	date	description
	D0550-HIN	01:01:16	TRANSPORT BRACKET-FORCE CM/CM+
	D0560-HIN	01:01:16	TRANSPORT BKTS - NCM/NAVIGATOR
	D0570-HIN	01:01:16	TRANSPORT BKTS - SPB NAVIGATOR
	D0575-HIN	06:01:20	TRANSPORT BKTS - SPB RANGER
	D0580-HIN	01:01:16	BOOM FORCE INER/OUTER WING 110
	D0590-HIN	08:09:16	BOOM FORCE CENTER FRAME
	D0600-HIN	01:01:16	BOOM TWIN INNER WING 60 66 HAC
	D0610-HIN	01:01:16	BOOM TWIN OUTER WING 60 66 HAC
	D0620-HIN	01:01:16	BOOM TWIN H FRAME & CENTER HAC
	D0630-HIN	01:01:16	BOOM - TWN HAC 60',66' AIR SYS
	D0640-HIN	01:01:16	BOOM-TWIN HAC 60-66 AIR/STRIPS
	D0650-HIN	01:01:16	BOOM - TF INNER WING HAZ 80/90
	D0660-HIN	01:01:16	BOOM-TF INNER HAZ-WC 60'-100'
	D0670-HIN	01:01:16	BOOM - TF OUTER WING HAZ 80/90
	D0680-HIN	01:01:16	BOOM-TF OUTER HAZ-WC 60'-100'
	D0690-HIN	08:09:16	BOOM TWIN FORCE HAZ CENTER
	D0700-HIN	01:01:16	BOOM FORCE/TWIN FORCE LIFT F
	D0710-HIN	05:06:19	BOOM TF HAZ NARROW CENTER 118'
	D0720-HIN	26:11:18	BOOM TF INNER HAZ 2-FOLD 118'
	D0730-HIN	11:12:17	BOOM TF OUTER HAZ 2-FOLD 118'
	D0740-HIN	05:06:19	WIDE CENTER FRAME-FORCE/TF
	D0750-HIN	01:01:16	BOOM-FORCE INNER WING 80'-132'
	D0760-HIN	01:01:16	BOOM-FORCE OUTER WING 110-132'
	D0770-HIN	01:01:16	BOOM-FORCE BREAKAWAY 80'-132'
	D0780-HIN	01:01:16	BOOM-FORCE INNER 100' BI-FOLD
	D0790-HIN	01:01:16	BOOM-FORCE OUTER 100' BI-FOLD
	D0800-HIN	17:07:19	BOOM TERRA FORCE INNER
	D0810-HIN	12:09:17	BOOM TERRA FORCE OUTER
	D0820-HIN	19:02:18	BOOM TERRA FORCE CENTER PRE 2014
	D0821-HIN	15:02:18	BOOM TERRA FORCE CENTER 2014
	D0822-HIN	22:08:19	BOOM TERRA FORCE CENTER POM.YAW
	D0830-HIN	04:12:17	TERRA FORCE YAW/PEND.LOCK PRE 2014
	D0840-HIN	10:01:18	TERRA FORCE DYNAMIC CENTER
	D0850-HIN	01:07:19	TERRA FORCE TRANSPORT BRACKET
	D0860-HIN	01:01:16	BOOM WHEEL,FTZ,HD,AIR-BAG
	D0870-HIN	24:06:16	TRANSPORT BKTS - SPC PRESIDIO
	D0880-HIN	05:01:17	TRANSPORT BKT HAZ ALPHA RH
	D0890-HIN	07:02:17	ALPHA EVO LIFT ADAPTER 80-100' HAZ
	D0900-HIN	05:06:19	DTZ TRAPEZE CENTER
	D0910-HIN	17:05:17	DTZ HYDRAULIC YAW
	D0920-HIN	18:05:17	DTZ MECHANICAL YAW
	D0930-HIN	15:07:19	DTZ 120'/132' BOOM 3 FOLD INNER
	D0940-HIN	05:05:20	DTZ 120'/132' BOOM 3 FOLD OUTER
	D0950-HIN	15:07:19	DTZ 90' BOOM 2 FOLD INNER
	D0960-HIN	30:06:17	DTZ 90' BOOM 2 FOLD OUTER
	D0970-HIN	30:04:20	DTZ BREAKAWAYS
	D0980-HIN	30:05:17	DTZ HYD. BOOM LOCK
	D0990-HIN	05:07:17	TRANSPORT BRACKET DTZ
	D1000-HIN	01:01:16	BOOM-NOZZLES 110° FLAT FAN ISO
	D1010-HIN	01:01:16	BOOM-NOZZLES 110° LOWDRIFT ISO
	D1020-HIN	01:01:16	BOOM-NOZZLES 80° FLAT FAN ISO
	D1030-HIN	28:11:17	BOOM-NOZZLE CAPS AND FILTERS
	D1040-HIN	01:01:16	BOOM-NOZZLES INJET
	D1045-HIN	04:05:17	BOOM-NOZZLES TEEJET
	D1050-HIN	01:01:16	BOOM-NOZZLES MINIDRIFT
	D1060-HIN	01:01:16	BOOM-NOZZLES QUINTASTREAM
	D1070-HIN	01:01:16	NOZZLES - HANDHELD SPRAYERS
	D1080-HIN	01:01:16	NOZZLE BODIES-THREADED

main group	page-n°	date	description
	D1090-HIN	01:01:16	NOZZLE BODIES-SNAP FIT
	D1100-HIN	01:01:16	DOUBLE NOZZLE HOLDER-SNAP FIT
	D1110-HIN	08:04:19	NOZZLE TUBES & HOLDER-PLASTIC
	D1120-HIN	01:01:16	NZZL TUBES&FITTNGS-STNLS STEEL
	D1130-HIN	05:04:18	NOZZLE BODIES - T25
	D1140-HIN	29:11:17	NOZZLE TUBES - PLASTIC T25
	D1150-HIN	01:03:18	NOZZLE TUBES - STNLS STEEL T25
	D1200-HIN	05:06:19	HAZ 120' TRAPEZE CENTER
	D1210-HIN	31:01:18	HAZ 3.1 120' TF BOOM 2 FOLD INNER
	D1220-HIN	31:01:18	HAZ 3.1 120' TF BOOM 2 FOLD OUTER
	D1230-HIN	01:02:18	ALPHA EVO LIFT ADAPTER 120' HAZ 3.1
	D1240-HIN	26:09:19	SPC BOOM CENTER TRACK 2017

BOOM - 6' FOLDING
D0010-HIN, 01:01:16

Date 12.08.2020 11:37

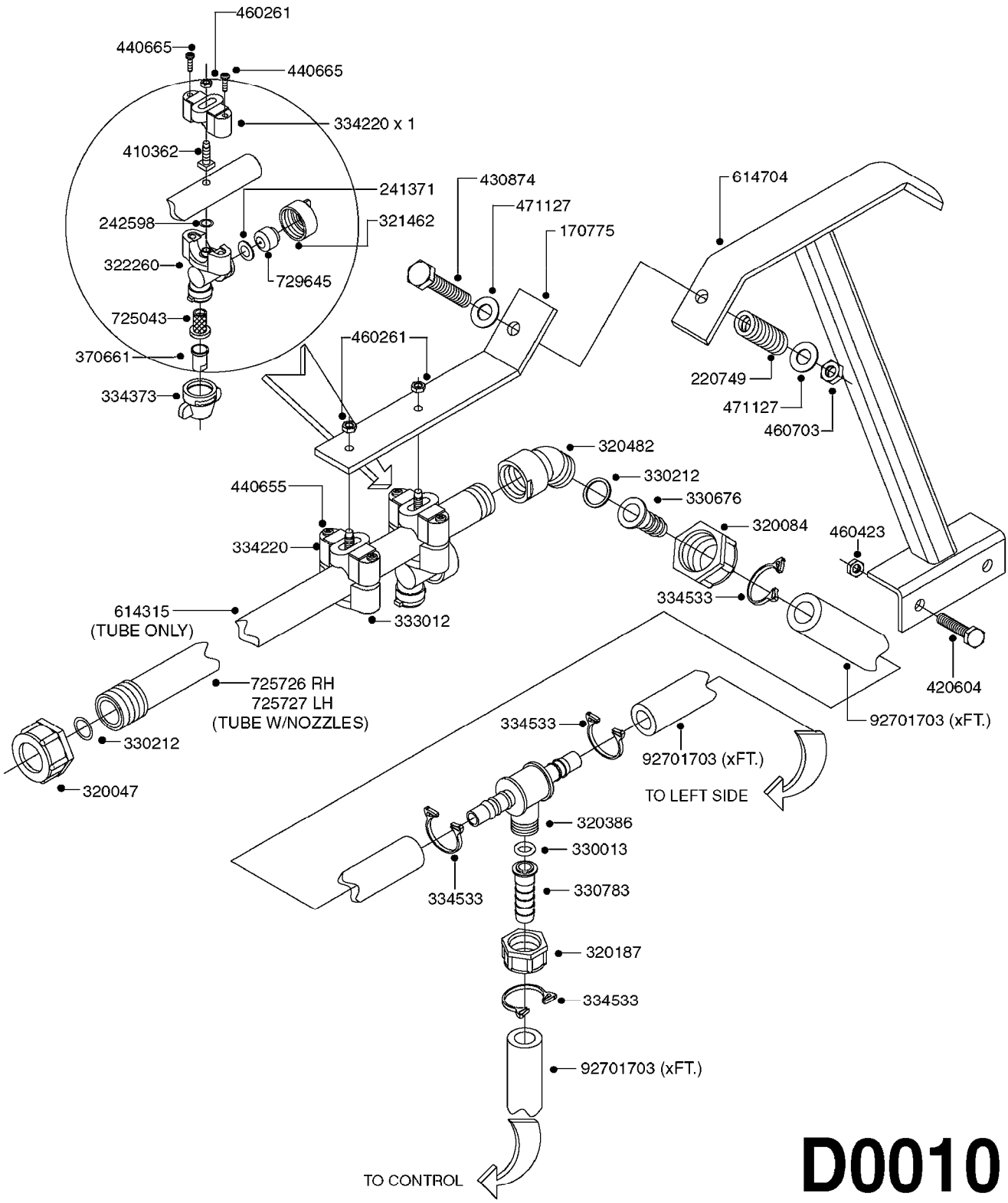

D0010

Agroparts: www.HARDI-INTERNATIONAL.com

BOOM - 6' FOLDING
D0010-HIN, 01:01:16

Date 12.08.2020 11:37

parts-n°	order qty	description
170775	1	ARM FOR ATV BOOM
220749	1	SPRING D20.5X52
241371	1	DIAPHRAGM F.NO-DRIP,VULC
242598	1	O-RING D7.0 X 2.5 NITRIL
320047	1	FITT.DK CAPNUT 1/2" BSP
320084	1	FITT.DK NUT 1/2" BSP
320187	1	FITT.DK CAP 3/8" BSP BLACK
320386	1	FITT.DK TEE 3/8X3/8HB X3/8"BSP
320482	1	FITT.DK ELB. 1/2" BSP 60 DEG.
321462	1	CAP F.NO-DRIP ASSY.
322260	1	NOZZLE HOLDER LOWER PART
330013	1	O-RING 2.5 X 10 PUR
330212	1	O-RING D19/D14X2.4 F.1/2"NUT
330676	1	FITT.DK HB 3/8" F. 1/2" NUT
330783	1	FITT.DK HB 3/8"F.3/8" NUT
333012	1	NOZZLE HOLD. UPPER PART
334220	1	YOKE, UPPER NOZZLE BODY
334373	1	SNAP-FIT NOZZLE HOLDER RED
334533	1	CLAMP HOSE PLASTIC 3/8"
370661	1	NOZZLE FLAT FAN 4110-12
410362	1	BOLT HEX 8.8 SS M6X20
420604	1	BOLT HEX 8.8 DEL M10X25 FT DIN933
430874	1	SCREW SET 8.8 DEL M12X70 FT
440665	1	SCREW M4.2X16 STAINLESS
460261	1	NUT HEX M6X1.00 LOCK DIN985 A2 SS
460423	1	NUT HEX M10X1.50 LOCK DIN985A2 SS
460703	1	NUT HEX M12X1.75 LOCK DIN985A2 SS
471127	1	WASHER, M12, Ø24/13X24X2.5 SS
614315	1	TUBE F.6'BOOM W.ENDS NO NOZZ.
614704	1	UPRIGHT FOR ATV SPRAYER
725043	1	SCREEN 50 MESH W.GASKET,BLUE
725726	1	NOZZLE TUBE ASSY. ES30 RIGHT
725727	1	NOZZLE TUBE ASSY. ES30 LEFT
729645	1	NON-DRIP SPRING ASSY.GREEN 10
92701703	1	HOSE R X3/8" X300PSI WP X0012"

BOOM - 14' HD
D0020-HIN, 19:08:19

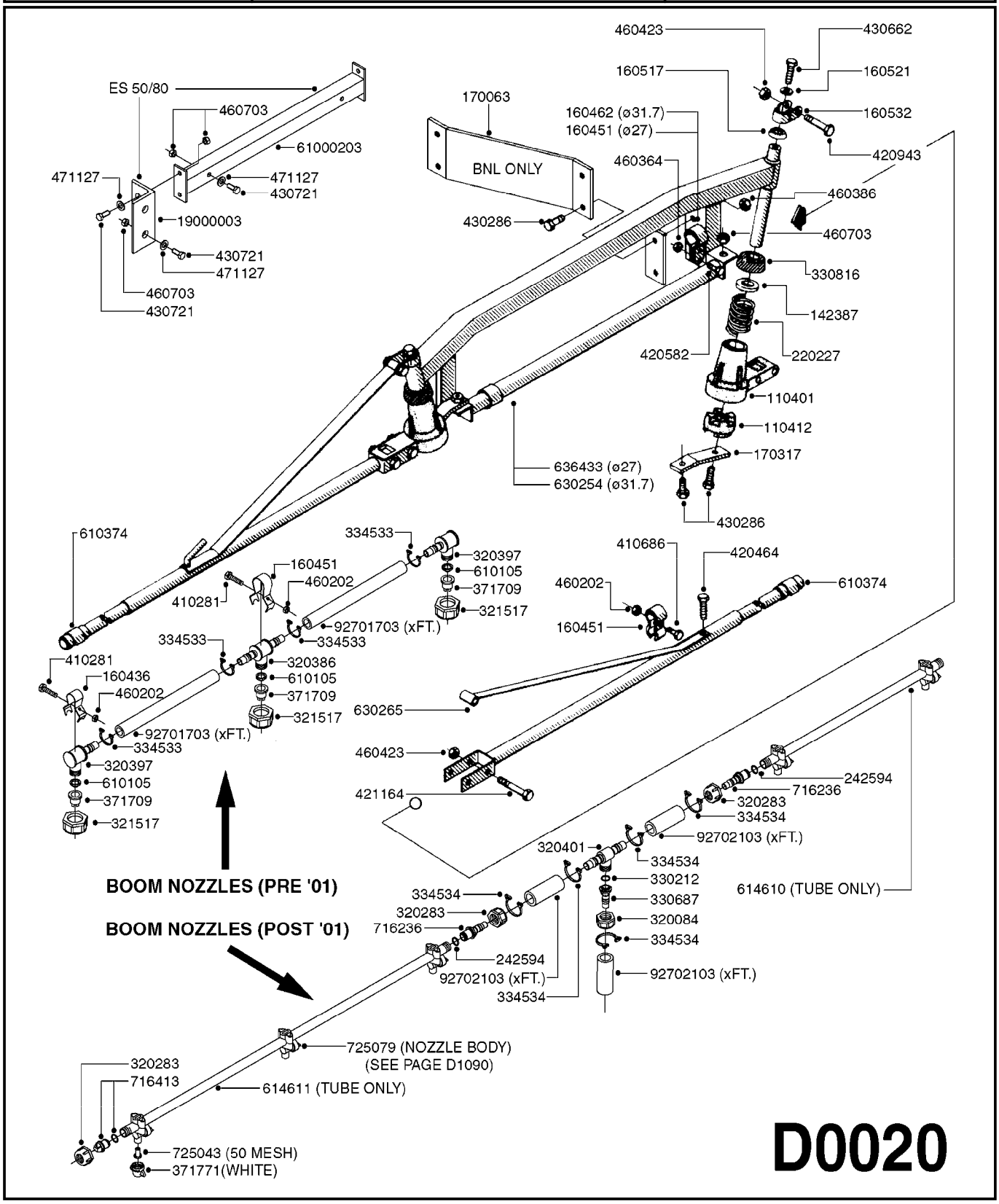

D0020

Agroparts: www.HARDI-INTERNATIONAL.com

BOOM - 14' HD
D0020-HIN, 19:08:19

Date 12.08.2020 11:37

parts-n°	order qty	description
110401	1	SPRING HOUSING STD BOOM
110412	1	CLUTCH STANDARD BOOM
142387	1	WASHER D40D23X5
160436	1	PIPE BRANCH HOLDER D22,2
160451	1	PIPE BRANCH HOLDER D25,4
160462	1	PIPE BRANCH HOLDER D31,7
160517	1	SPACER COLLAR, STANDARD BOM
160521	1	WASHER D30.5/D13X2
160532	1	CLAMP SWIVEL F. BOOM 14'H.D.
170063	1	SUPPORT BRKT.(USE-#725434 kit)
170317	1	CROSSBAR FOR BOOM WINE II
220227	1	SPRING FOR PIVOT
242594	1	O-RING D14 X 1.78 SCH.70-EPDM
320084	1	FITT.DK NUT 1/2" BSP
320283	1	FITT.DK NUT 3/4"BSP
320386	1	FITT.DK TEE 3/8X3/8HB X3/8"BSP
320397	1	FITT.DK ELB 3/8"HB X 3/8" BSP
320401	1	FITT.DK TEE 1/2X1/2HB X1/2"BSP
321517	1	FITT.DK CAP 3/8" BSP WHITE
330212	1	O-RING D19/D14X2.4 F.1/2"NUT
330687	1	FITT.DK HB 1/2" F. 1/2" NUT
330816	1	DUST COVER PLASTIC/STD.BOOM
334533	1	CLAMP HOSE PLASTIC 3/8"
334534	1	CLAMP HOSE PLASTIC 1/2"
371709	1	NOZZLE ISO F-03-110 BLUE
371771	1	NOZZLE ISO CT F-08-110 WHITE
410281	1	BOLT HEX 8.8 DEL M6X25 DIN933 A2
410686	1	BOLT HEX 8.8 DEL M6X30
420464	1	BOLT HEX 8.8 DEL 3/8'X20MM
420582	1	BOLT HEX 8.8 DEL M8X20 FT A2
420943	1	BOLT HEX 8.8 DEL M10X50
421164	1	BOLT HEX 8.8 DEL M10X70
430286	1	BOLT HEX 8.8 DEL M12X30 FT
430662	1	BOLT HEX 8.8 DEL M12X20 FT
430721	1	BOLT HEX 8.8 DEL M12X40 FT
460202	1	NUT HEX M6
460364	1	NUT HU M8 A2 SS DIN934
460386	1	NUT HEX M12X1.75
460423	1	NUT HEX M10X1.50 LOCK DIN985A2 SS
460703	1	NUT HEX M12X1.75 LOCK DIN985A2 SS
471127	1	WASHER, M12, Ø24/13X24X2.5 SS
610105	1	NOZZLE FILTER
610374	1	BOOM WING OUT.SECTION (WINE11)
614610	1	NOZZLE TUBE 2 HOLE L-24"/SP20"
614611	1	NOZZLE TUBE 3 HOLE L-44"/SP20"
630265	1	BOOM WING 14' BOOM
636433	1	CENTER SECTION 14' BOOM D27.0
716236	1	FITT.DK HB 1/2" ASSY. F. 3/4"
716413	1	FITT.DK PLUG ASSY. F.NOZ TUBE
725043	1	SCREEN 50 MESH W.GASKET,BLUE
725079	1	NOZZLE ASSY.SING.SNAP-FIT GREN
19000003	1	MOUNT ANGLE BRACKET ES50/80
61000203	1	MOUNT BRACKET F.14' BOOM
92701703	1	HOSE R X3/8" X300PSI WP X0012"
92702103	1	HOSE R X1/2" X300PSI WP X0012"

BOOM - V-II
D0030-HIN, 01:01:16

Date 12.08.2020 11:37

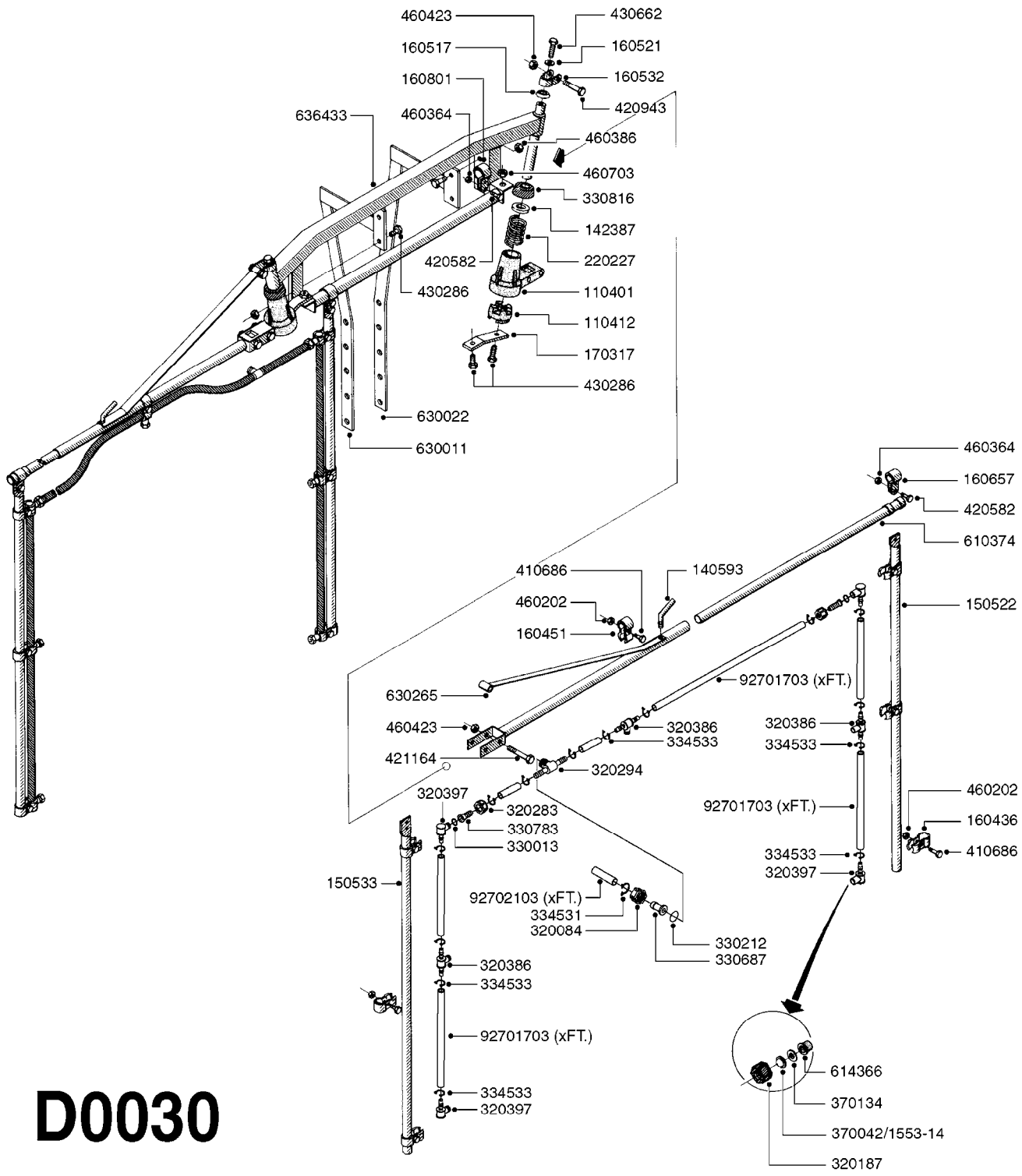

D0030

Agroparts: www.HARDI-INTERNATIONAL.com

BOOM - V-II
D0030-HIN, 01:01:16

Date 12.08.2020 11:37

parts-n°	order qty	description
110401	1	SPRING HOUSING STD BOOM
110412	1	CLUTCH STANDARD BOOM
140593	1	THUMB SCREW
142387	1	WASHER D40D23X5
150522	1	DROP TUBE WINE II
150533	1	DROP TUBE WINE II
160436	1	PIPE BRANCH HOLDER D22,2
160451	1	PIPE BRANCH HOLDER D25,4
160517	1	SPACER COLLAR, STANDARD BOM
160521	1	WASHER D30.5/D13X2
160532	1	CLAMP SWIVEL F. BOOM 14'H.D.
160657	1	CLIP FITTING FOT D22,2
160801	1	CLIP FITTINGS 31.7
170317	1	CROSSBAR FOR BOOM WINE II
220227	1	SPRING FOR PIVOT
320084	1	FITT.DK NUT 1/2" BSP
320187	1	FITT.DK CAP 3/8" BSP BLACK
320283	1	FITT.DK NUT 3/4"BSP
320294	1	FITT.DK TEE 3/8X3/8HB X1/2"BSP
320386	1	FITT.DK TEE 3/8X3/8HB X3/8"BSP
320397	1	FITT.DK ELB 3/8"HB X 3/8" BSP
330013	1	O-RING 2.5 X 10 PUR
330212	1	O-RING D19/D14X2.4 F.1/2"NUT
330687	1	FITT.DK HB 1/2" F. 1/2" NUT
330783	1	FITT.DK HB 3/8"F.3/8" NUT
330816	1	DUST COVER PLASTIC/STD.BOOM
334531	1	CLAMP HOSE PLASTIC 3/4"
334533	1	CLAMP HOSE PLASTIC 3/8"
370042	1	NOZZLE CONE JET 1553-14
370134	1	NOZZLE SWIRL 1554-GREY
410686	1	BOLT HEX 8.8 DEL M6X30
420582	1	BOLT HEX 8.8 DEL M8X20 FT A2
420943	1	BOLT HEX 8.8 DEL M10X50
421164	1	BOLT HEX 8.8 DEL M10X70
430286	1	BOLT HEX 8.8 DEL M12X30 FT
430662	1	BOLT HEX 8.8 DEL M12X20 FT
460202	1	NUT HEX M6
460364	1	NUT HU M8 A2 SS DIN934
460386	1	NUT HEX M12X1.75
460423	1	NUT HEX M10X1.50 LOCK DIN985A2 SS
460703	1	NUT HEX M12X1.75 LOCK DIN985A2 SS
610374	1	BOOM WING OUT.SECTION (WINE11)
614366	1	FILTER 50 MESH F.NOZZLE BLUE
630011	1	630011
630022	1	630022
630265	1	BOOM WING 14' BOOM
636433	1	CENTER SECTION 14' BOOM D27.0
92701703	1	HOSE R X3/8" X300PSI WP X0012"
92702103	1	HOSE R X1/2" X300PSI WP X0012"

BOOM - VS-8 & VS-10
D0040-HIN, 01:01:16

Date 12.08.2020 11:37

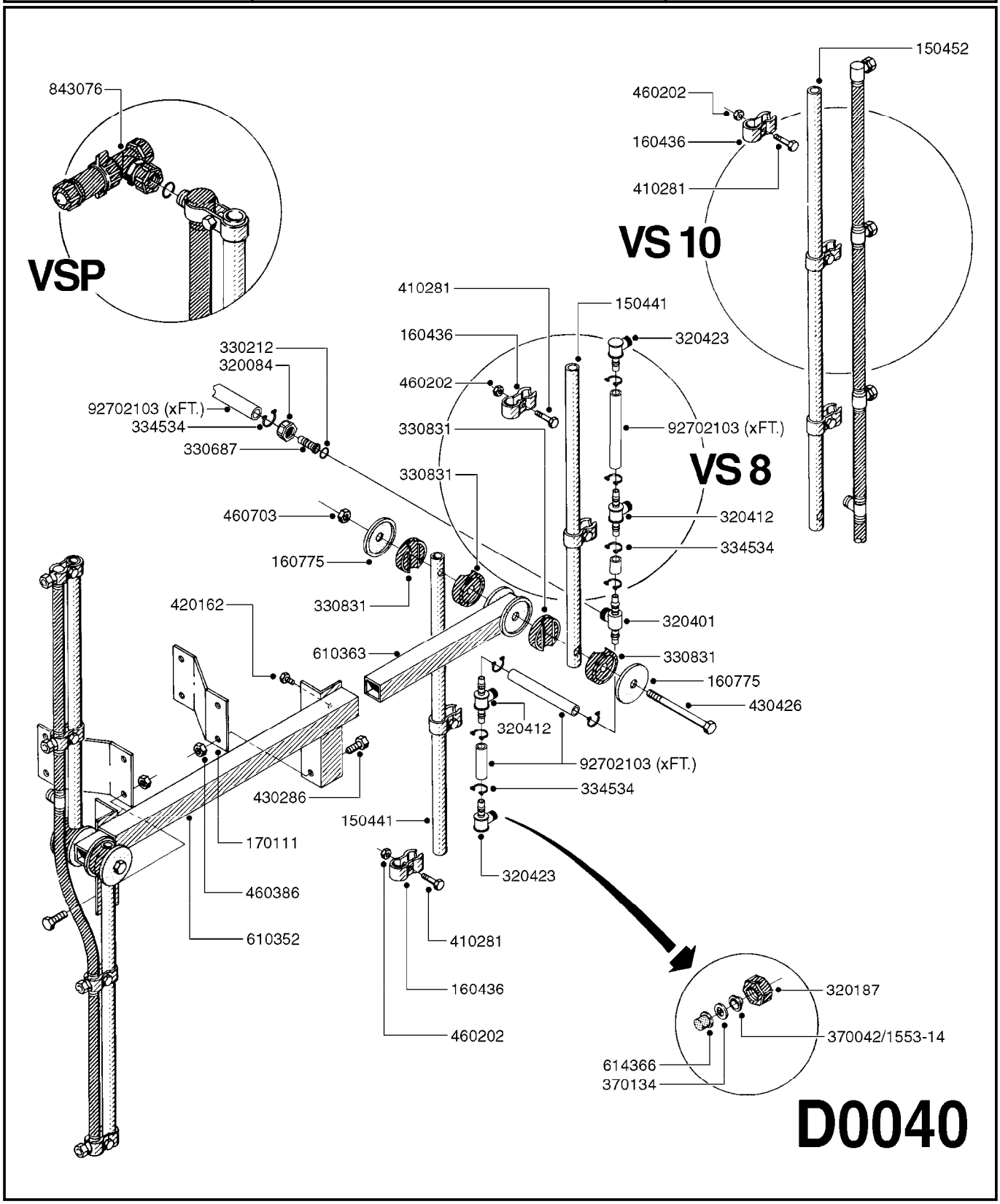

Agroparts: www.HARDI-INTERNATIONAL.com

BOOM - VS-8 & VS-10
D0040-HIN, 01:01:16

Date 12.08.2020 11:37

parts-n°	order qty	description
150441	1	BOOM WING OUT.SEC. WINE S630MM
150452	1	BOOM WING OUT.SEC. WINE S930MM
160436	1	PIPE BRANCH HOLDER D22,2
160775	1	WASHER F. FRICTION PLATE
170111	1	SUPP. ARM VIN S
320084	1	FITT.DK NUT 1/2" BSP
320187	1	FITT.DK CAP 3/8" BSP BLACK
320401	1	FITT.DK TEE 1/2X1/2HB X1/2"BSP
320412	1	FITT.DK TEE 1/2X1/2HB X3/8'BSP
320423	1	FITT.DK ELB 1/2'HB X 3/8' BSP
330212	1	O-RING D19/D14X2.4 F.1/2"NUT
330687	1	FITT.DK HB 1/2" F. 1/2" NUT
330831	1	FRICTION PLATE
334534	1	CLAMP HOSE PLASTIC 1/2"
370042	1	NOZZLE CONE JET 1553-14
370134	1	NOZZLE SWIRL 1554-GREY
410281	1	BOLT HEX 8.8 DEL M6X25 DIN933 A2
420162	1	BOLT HEX 8.8 DEL 3/8"x15MM
430286	1	BOLT HEX 8.8 DEL M12X30 FT
430426	1	BOLT HEX 8.8 DEL M12X130
460202	1	NUT HEX M6
460386	1	NUT HEX M12X1.75
460703	1	NUT HEX M12X1.75 LOCK DIN985A2 SS
610352	1	CENTER SECTION WINE S
610363	1	BOOM WING INNER SECTION
614366	1	FILTER 50 MESH F.NOZZLE BLUE
843076	1	SPR. PISTOL FOR BOOM (PLAST)
92702103	1	HOSE R X1/2" X300PSI WP X0012"

HARDI	**Agroparts: www.HARDI-INTERNATIONAL.com**	
	BOOM - 1 ROW B11 D0050-HIN, 01:01:16	Page 0 Date 12.08.2020 11:37

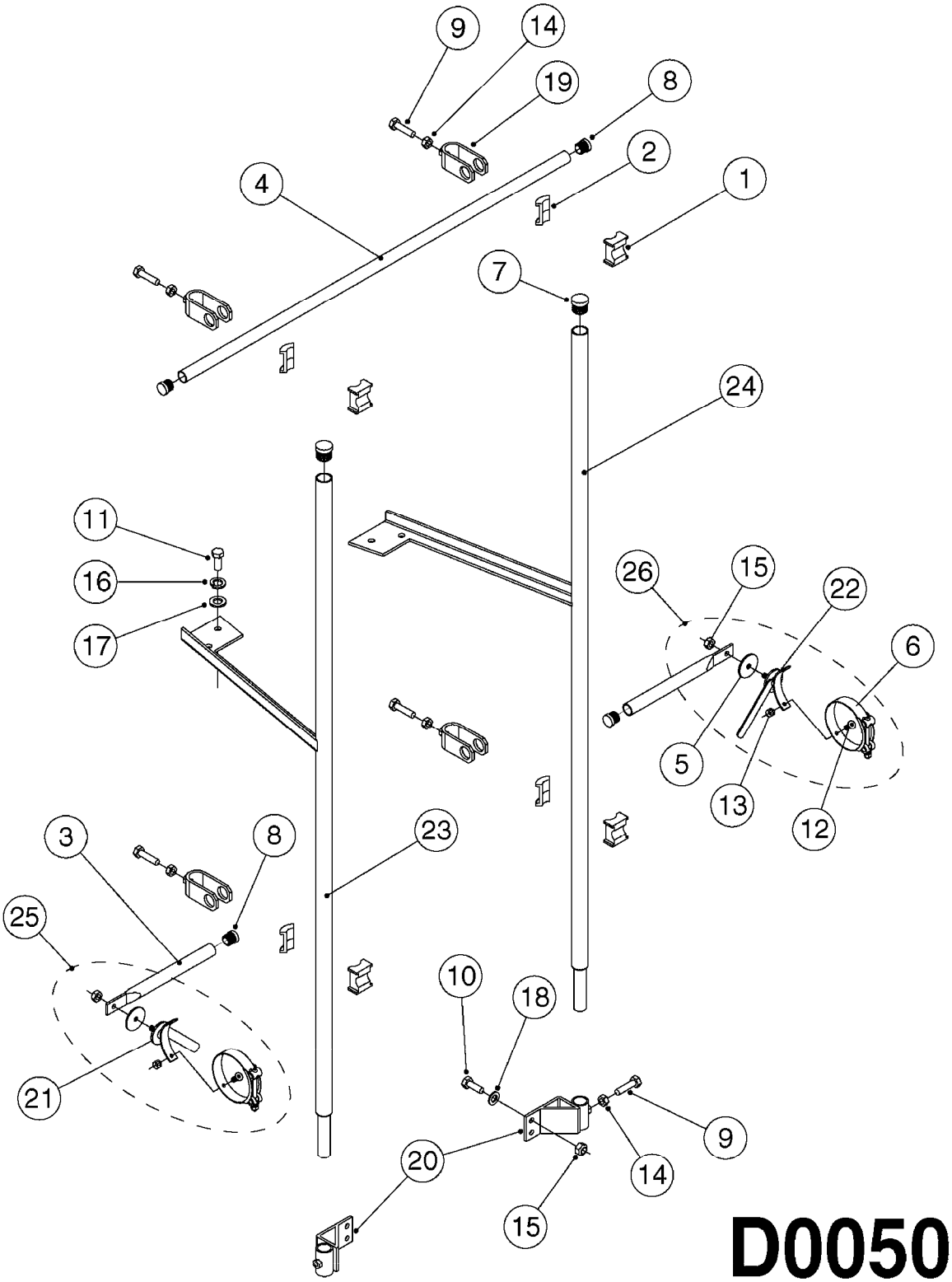

Agroparts: www.HARDI-INTERNATIONAL.com

BOOM - 1 ROW B11
D0050-HIN, 01:01:16

Date 12.08.2020 11:37

Pos.	parts-nº	order qty	description
1	129032	1	CLAMP HALF F.TUBE EXTENSION
2	129139	1	CLAMP HALF F.TUBE EXTENSION
3	157097	1	EXTENSION ROD L=12"
4	157183	1	TUBE 3/4"X1100 F.B11 BOOM
5	249050	1	FRICTION WASHER D48X10X3.5
6	289259	1	CLAMP 112/104
7	289296	1	PLUG D.30
8	289305	1	TUBE PLUG D24
9	420965	1	M10X40 MACHINE SCREW STAINLESS
10	421002	1	BOLT HEX 8.8 DEL M10X30 FT DIN933
11	430286	1	BOLT HEX 8.8 DEL M12X30 FT
12	459011	1	BOLT M6X16 ALLEN DIN-7991
13	460261	1	NUT HEX M6X1.00 LOCK DIN985 A2 SS
14	460342	1	NUT HEX M10 DEL DIN934
15	460423	1	NUT HEX M10X1.50 LOCK DIN985A2 SS
16	470466	1	WASHER D21.1/D12.2X2.5 LOCK
17	471071	1	WASHER M12 GALV
18	471122	1	WASHER, M10, Ø20/10.5X 2.0, SS
19	619063	1	HOLDER FOR EXTENSION
20	619645	1	BOOM MOUNT BKT.SHORT B11 AR/MR
21	639045	1	BRACKET FOR SPOUT RH
22	639046	1	BRACKET FOR SPOUT LH
23	639694	1	BOOM FRAME B11 LH "H"
24	639839	1	BOOM FRAME B11 RH "H"
25	739485	1	BRACKET,RIGHT,VINE 104/112
26	739486	1	BRACKET,LEFT,VINE 104/112

BOOM - SB 20' 26' 33' 40'
D0060-HIN, 18:12:19

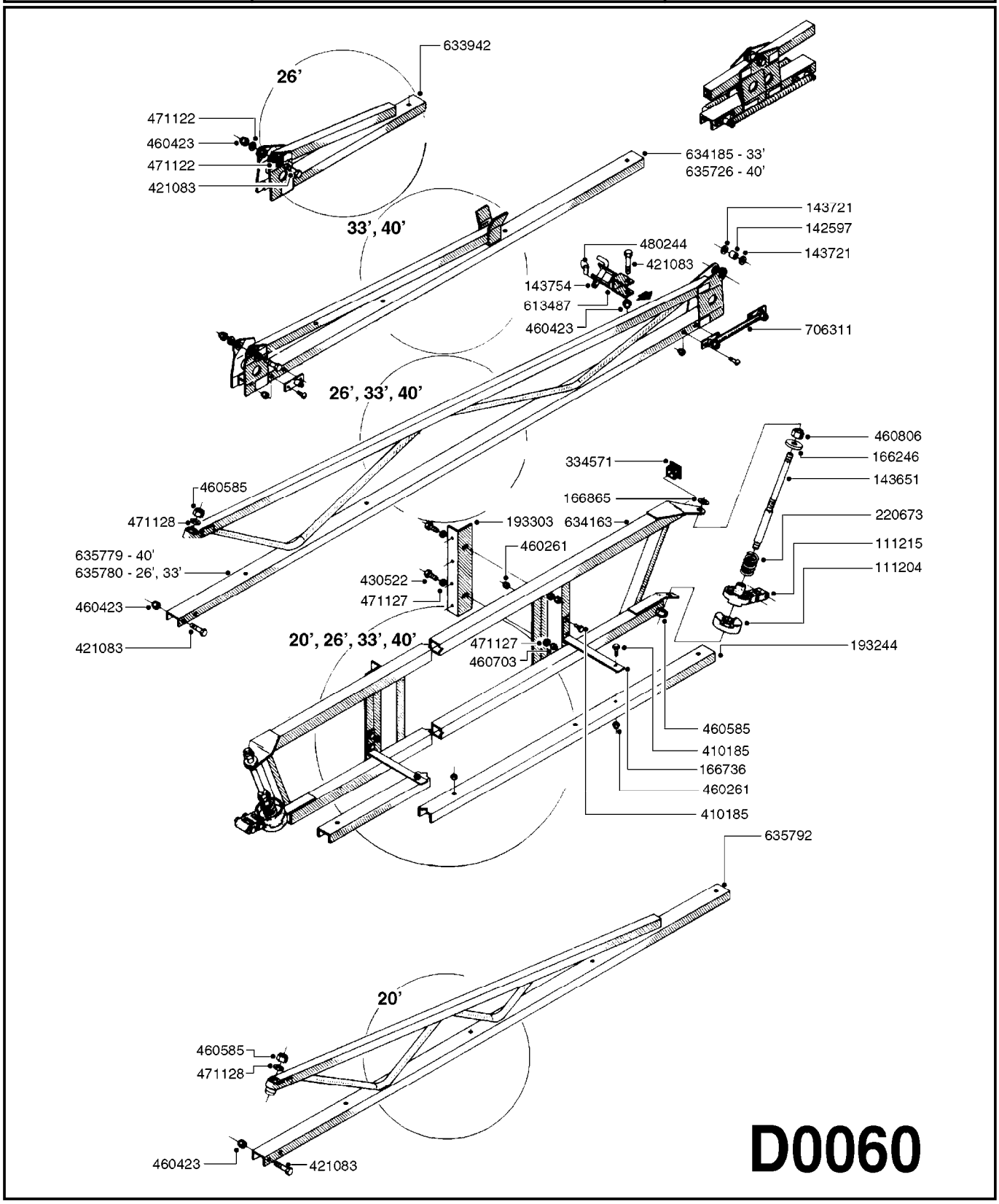

Agroparts: www.HARDI-INTERNATIONAL.com

BOOM - SB 20' 26' 33' 40'
D0060-HIN, 18:12:19

Date 12.08.2020 11:37

parts-n°	order qty	description
111204	1	CLAW CLUTCH/LOWER D80
111215	1	CLAW CLUTCH/UPPER D80
142597	1	DISTANCE TUBE
143651	1	AXLE M20/M16 L=355 F/BREAKAWAY
143721	1	FRICTION DISC FOR BOOM D30
143754	1	PIN D10 X 56
166246	1	WASHER CUP D53 F.SPRING
166736	1	CLAMP FOR SB BOOM
166865	1	WASHER D35/D25X2
193244	1	NOZZLE TRACK 6-8-10 M SB
193303	1	SUPPORTING ARM FOR SB BOOM
220673	1	SPRING F.PIVOT 100 X 51
334571	1	PLUG 40x40x2 F.SQ.TUBE
410185	1	BOLT HEX 8.8 DEL M6X16
421083	1	BOLT HEX 8.8 DEL M10X65
430522	1	BOLT HEX 8.8 DEL M12X25 FT
460261	1	NUT HEX M6X1.00 LOCK DIN985 A2 SS
460423	1	NUT HEX M10X1.50 LOCK DIN985A2 SS
460585	1	LOCKING NUT M16 DIN985 A2 SS
460703	1	NUT HEX M12X1.75 LOCK DIN985A2 SS
460806	1	NUT HEX M20X2.50 LOCK DIN985A2 SS
471122	1	WASHER, M10, Ø20/10.5X 2.0, SS
471127	1	WASHER, M12, Ø24/13X24X2.5 SS
471128	1	WASHER, M16, Ø30/17.0X 3.0, SS
480244	1	PIN SNAP D4.5
613487	1	TRANSPORT FITTINGS FOR SB BOOM
633942	1	OUTER BOOM WING 26', 28' SB
634163	1	CENTER SECTION - 20',26',33'
634185	1	BOOM WING OUTER PART 33' SB
635726	1	BOOM WING OUTER PART 40' SB
635779	1	INNER WING SECTION 40' SB
635780	1	INNER WING SEC. 26',28',33'SB
635792	1	BOOM WING - 20',21'SB-BOOM
706311	1	SPRING WITH HAND-GRIB

BOOM - SB H-FRAME & CENTER HY
D0070-HIN, 01:01:16

Date 12.08.2020 11:37

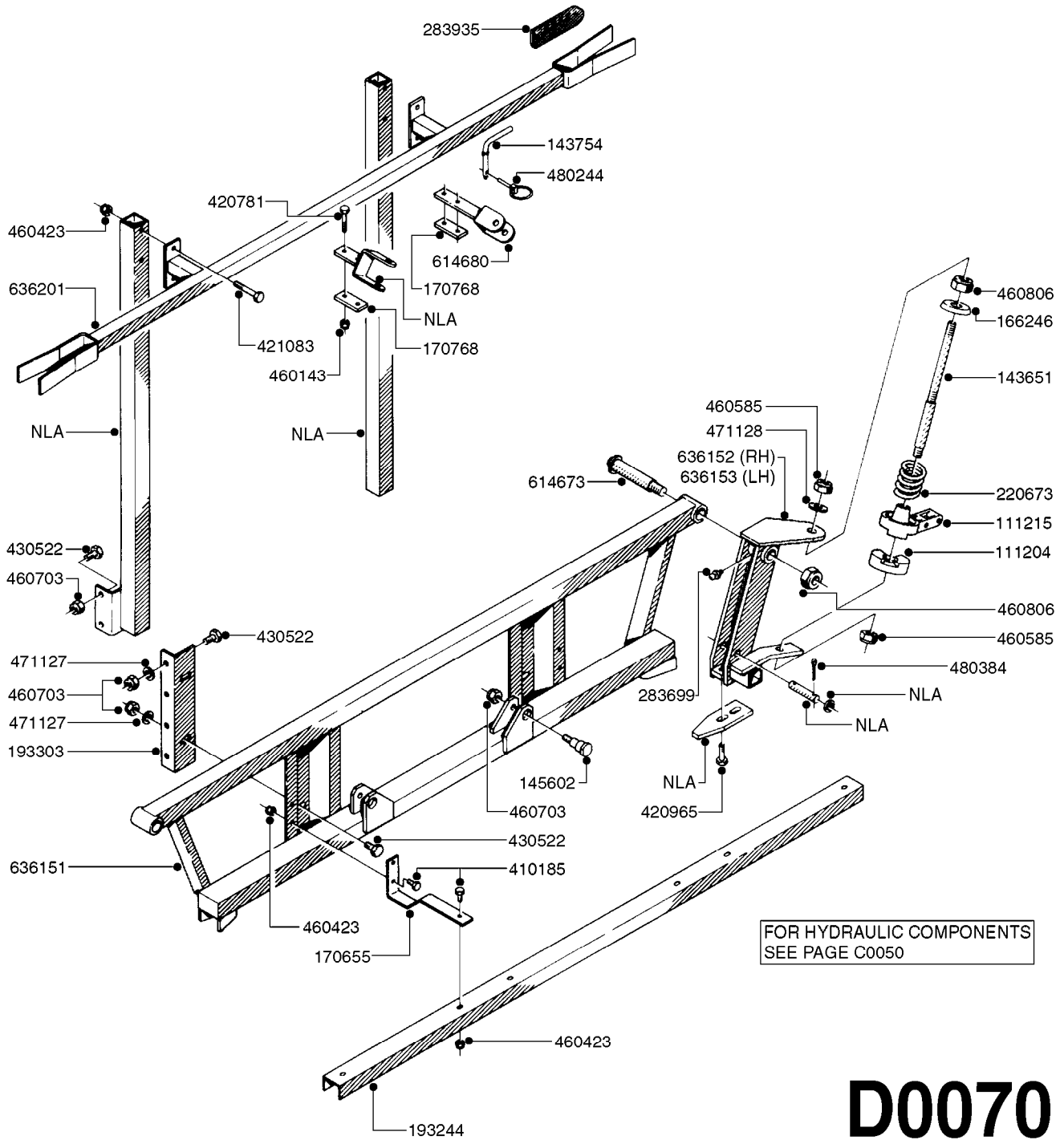

D0070

Agroparts: www.HARDI-INTERNATIONAL.com

BOOM - SB H-FRAME & CENTER HY
D0070-HIN, 01:01:16

Date 12.08.2020 11:37

parts-n°	order qty	description
111204	1	CLAW CLUTCH/LOWER D80
111215	1	CLAW CLUTCH/UPPER D80
143651	1	AXLE M20/M16 L=355 F/BREAKAWAY
143754	1	PIN D10 X 56
145602	1	BOLT SHOULDER M12 X 68 D=17
166246	1	WASHER CUP D53 F.SPRING
170655	1	BRKT. F/SB/HY CENTER
170768	1	FLAT BAR 30X6 L=70/2XØ9
193244	1	NOZZLE TRACK 6-8-10 M SB
193303	1	SUPPORTING ARM FOR SB BOOM
220673	1	SPRING F.PIVOT 100 X 51
283699	1	GREASE NIPPLE M6X1
283935	1	PLASTIC COVER F. ARM SB/HYD
410185	1	BOLT HEX 8.8 DEL M6X16
420781	1	BOLT HEX 8.8 DEL M8X50
420965	1	M10X40 MACHINE SCREW STAINLESS
421083	1	BOLT HEX 8.8 DEL M10X65
430522	1	BOLT HEX 8.8 DEL M12X25 FT
460143	1	LOCK NUT M8 SST A2 DIN985
460423	1	NUT HEX M10X1.50 LOCK DIN985A2 SS
460585	1	LOCKING NUT M16 DIN985 A2 SS
460703	1	NUT HEX M12X1.75 LOCK DIN985A2 SS
460806	1	NUT HEX M20X2.50 LOCK DIN985A2 SS
471127	1	WASHER, M12, Ø24/13X24X2.5 SS
471128	1	WASHER, M16, Ø30/17.0X 3.0, SS
480244	1	PIN SNAP D4.5
480384	1	PIN COTTER 3/16 x 1-1/2"
614673	1	PIN D26X140MM
614680	1	ARM LONG FOR SB BOOM
636151	1	CENTER FRAME SB/
636152	1	HINGE 20/26'HY FOLD RH
636153	1	HINGE 20/26' HY FOLD LH
636201	1	TRANSPORT F.SB HYDRAULIC BOOM

BOOM - 2 ROW GRAPE B20-MA
D0080-HIN, 01:01:16

Date 12.08.2020 11:37

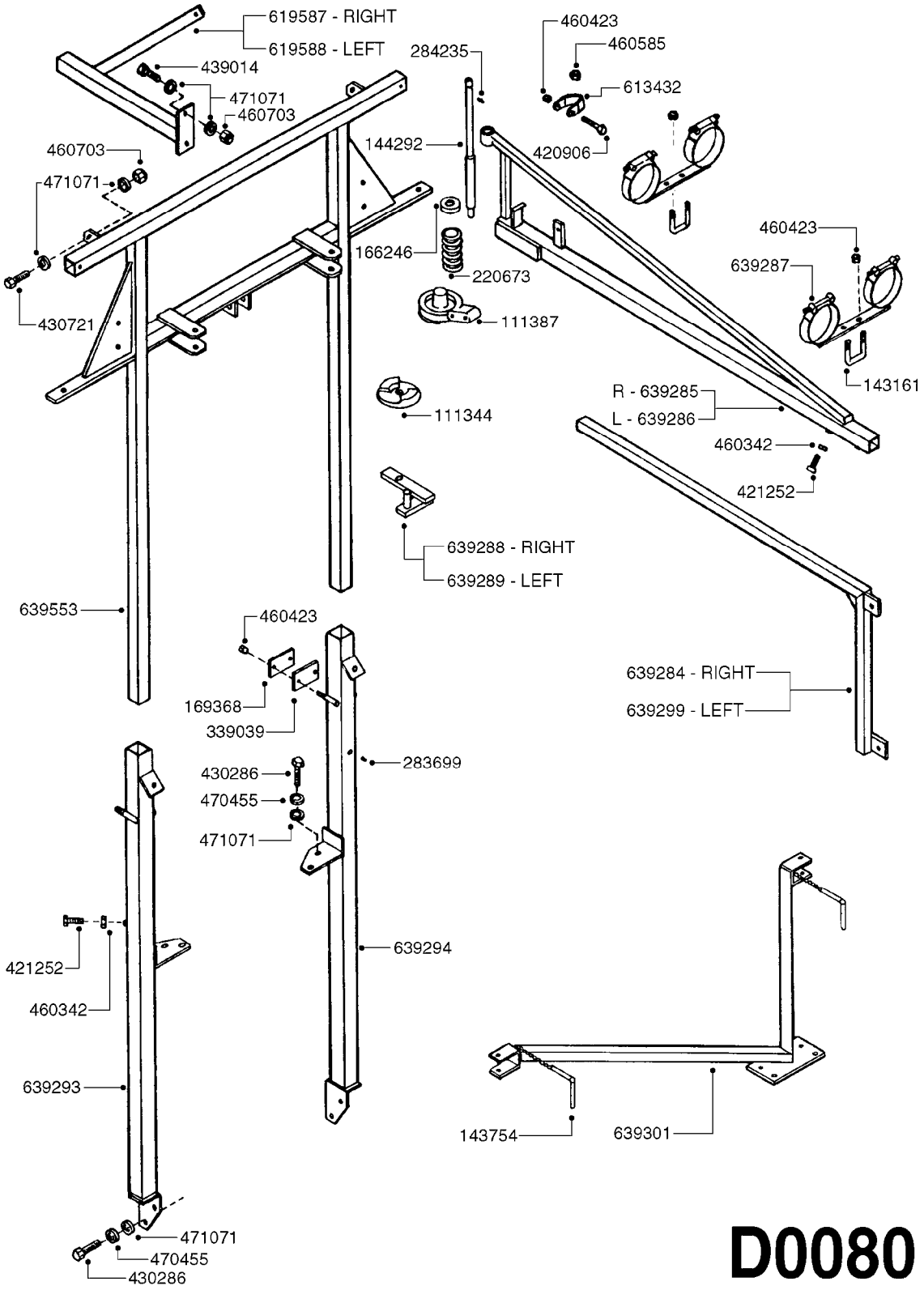

D0080

Agroparts: www.HARDI-INTERNATIONAL.com

BOOM - 2 ROW GRAPE B20-MA
D0080-HIN, 01:01:16

Date 12.08.2020 11:37

parts-n°	order qty	description
111344	1	CLAW CLUTCH Ø100/Ø20,5 UNDER PART RED
111387	1	CLAW CLUTCH D100 UPPER PART
143161	1	BOLT U M10 40X40
143754	1	PIN D10 X 56
144292	1	AXLE F/BREAKAWAY M20/M16 L=426
166246	1	WASHER CUP D53 F.SPRING
169368	1	PLATE F. SLIDE SHOE
220673	1	SPRING F.PIVOT 100 X 51
283699	1	GREASE NIPPLE M6X1
284235	1	ENGRASADOR M-6/100 RECTO
339039	1	SLIDE SHOE - NYLON
420906	1	BOLT HEX 8.8 DEL M10X60
421252	1	SCREW M10X30 CAP
430286	1	BOLT HEX 8.8 DEL M12X30 FT
430721	1	BOLT HEX 8.8 DEL M12X40 FT
439014	1	BOLT HEX 8.8 DEL M12X35
460342	1	NUT HEX M10 DEL DIN934
460423	1	NUT HEX M10X1.50 LOCK DIN985A2 SS
460585	1	LOCKING NUT M16 DIN985 A2 SS
460703	1	NUT HEX M12X1.75 LOCK DIN985A2 SS
470455	1	WASHER D12 SPRING
471071	1	WASHER M12 GALV
613432	1	BUSHING/STRAP F/BOOM
619587	1	REAR DROP ARM SUPPORT - RH
619588	1	REAR DROP ARM SUPPORT - LH
639284	1	OUTER WING B20 - RH
639285	1	INNER WING B20 - RH
639286	1	INNER WING B20 - LH
639287	1	AIR TUBE HOLDER - DOUBLE
639288	1	HINGE ANCHOR PLATE - RH
639289	1	HINGE ANCHOR PLATE - LH
639293	1	B20 CENTER MOUNT BRKT. - RH
639294	1	B20 CENTER MOUNT BRKT. - LH
639299	1	OUTER WING B20 - LH
639301	1	B20-MA TRANSPORT BRKT.
639553	1	B20 CENTER SECTION

BOOM - 2 ROW GRAPE B20-HY
D0090-HIN, 01:01:16

Page 0

Date 12.08.2020 11:37

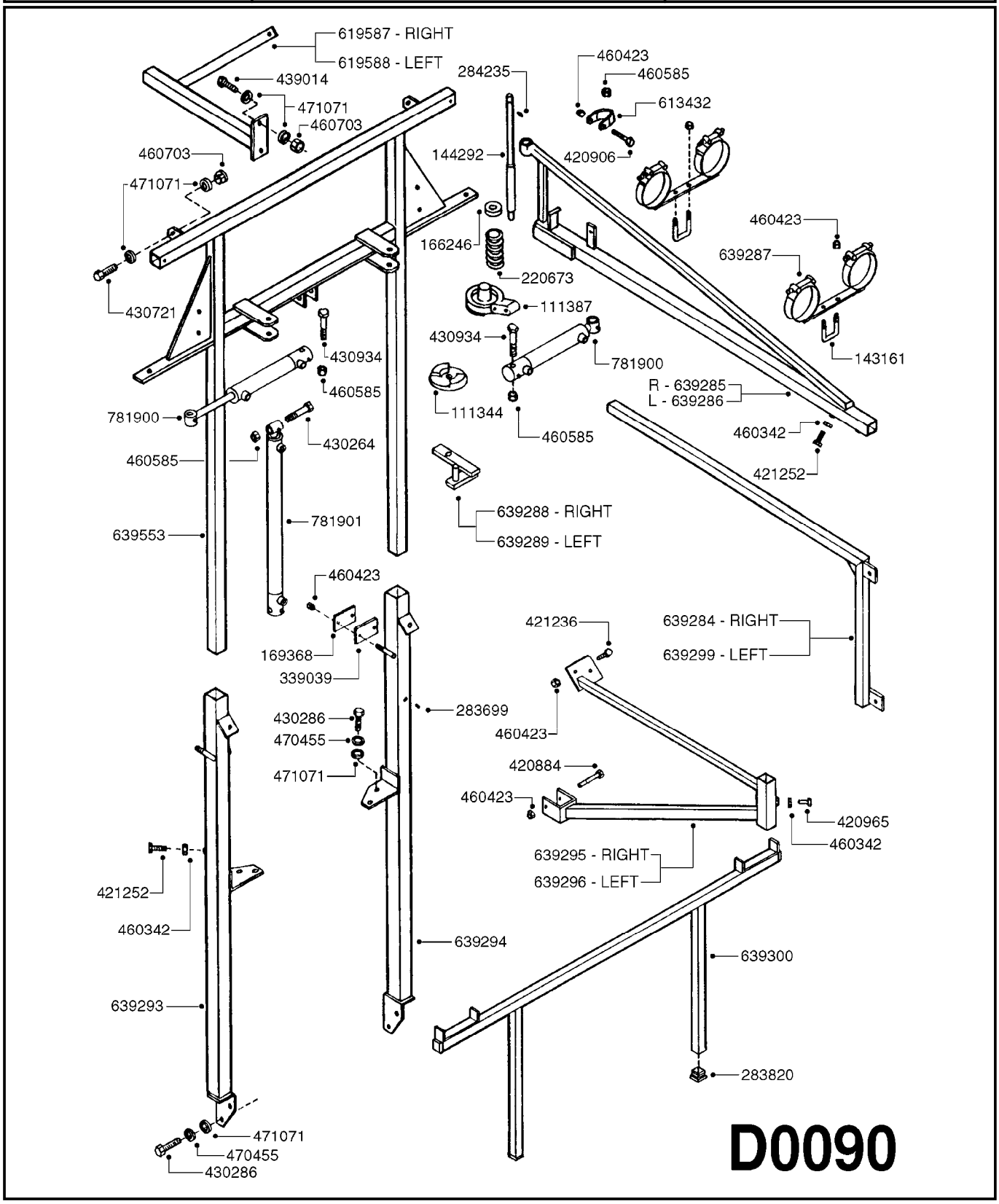

Agroparts: www.HARDI-INTERNATIONAL.com

BOOM - 2 ROW GRAPE B20-HY
D0090-HIN, 01:01:16

Date 12.08.2020 11:37

parts-n°	order qty	description
111344	1	CLAW CLUTCH Ø100/Ø20,5 UNDER PART RED
111387	1	CLAW CLUTCH D100 UPPER PART
143161	1	BOLT U M10 40X40
144292	1	AXLE F/BREAKAWAY M20/M16 L=426
166246	1	WASHER CUP D53 F.SPRING
169368	1	PLATE F. SLIDE SHOE
220673	1	SPRING F.PIVOT 100 X 51
283699	1	GREASE NIPPLE M6X1
283820	1	PLUG 30MM / 1-1/4X1/8 SQ TUBE
284235	1	ENGRASADOR M-6/100 RECTO
339039	1	SLIDE SHOE - NYLON
420884	1	BOLT HEX 8.8 DEL M10X80 FT
420906	1	BOLT HEX 8.8 DEL M10X60
420965	1	M10X40 MACHINE SCREW STAINLESS
421236	1	BOLT HEX M10X25 GALV.
421252	1	SCREW M10X30 CAP
430264	1	BOLT HEX 8.8 DEL M16X100
430286	1	BOLT HEX 8.8 DEL M12X30 FT
430721	1	BOLT HEX 8.8 DEL M12X40 FT
430934	1	BOLT HEX 8.8 DEL M16X80
439014	1	BOLT HEX 8.8 DEL M12X35
460342	1	NUT HEX M10 DEL DIN934
460423	1	NUT HEX M10X1.50 LOCK DIN985A2 SS
460585	1	LOCKING NUT M16 DIN985 A2 SS
460703	1	NUT HEX M12X1.75 LOCK DIN985A2 SS
470455	1	WASHER D12 SPRING
471071	1	WASHER M12 GALV
613432	1	BUSHING/STRAP F/BOOM
619587	1	REAR DROP ARM SUPPORT - RH
619588	1	REAR DROP ARM SUPPORT - LH
639284	1	OUTER WING B20 - RH
639285	1	INNER WING B20 - RH
639286	1	INNER WING B20 - LH
639287	1	AIR TUBE HOLDER - DOUBLE
639288	1	HINGE ANCHOR PLATE - RH
639289	1	HINGE ANCHOR PLATE - LH
639293	1	B20 CENTER MOUNT BRKT. - RH
639294	1	B20 CENTER MOUNT BRKT. - LH
639295	1	B20-HY TRANSPORT SUPPORT - RH
639296	1	B20-HY TRANSPORT SUPPORT - LH
639299	1	OUTER WING B20 - LH
639300	1	B20-HY TRANSPORT BRKT.
639553	1	B20 CENTER SECTION
781900	1	CYLINDER D20-150
781901	1	CYLINDER BOOM HEIGHT

	Agroparts: www.HARDI-INTERNATIONAL.com	
HARDI	REAR DROP ARMS-2 ROW GRAPE B20 D0100-HIN, 01:01:16	Page 0 Date 12.08.2020 11:37

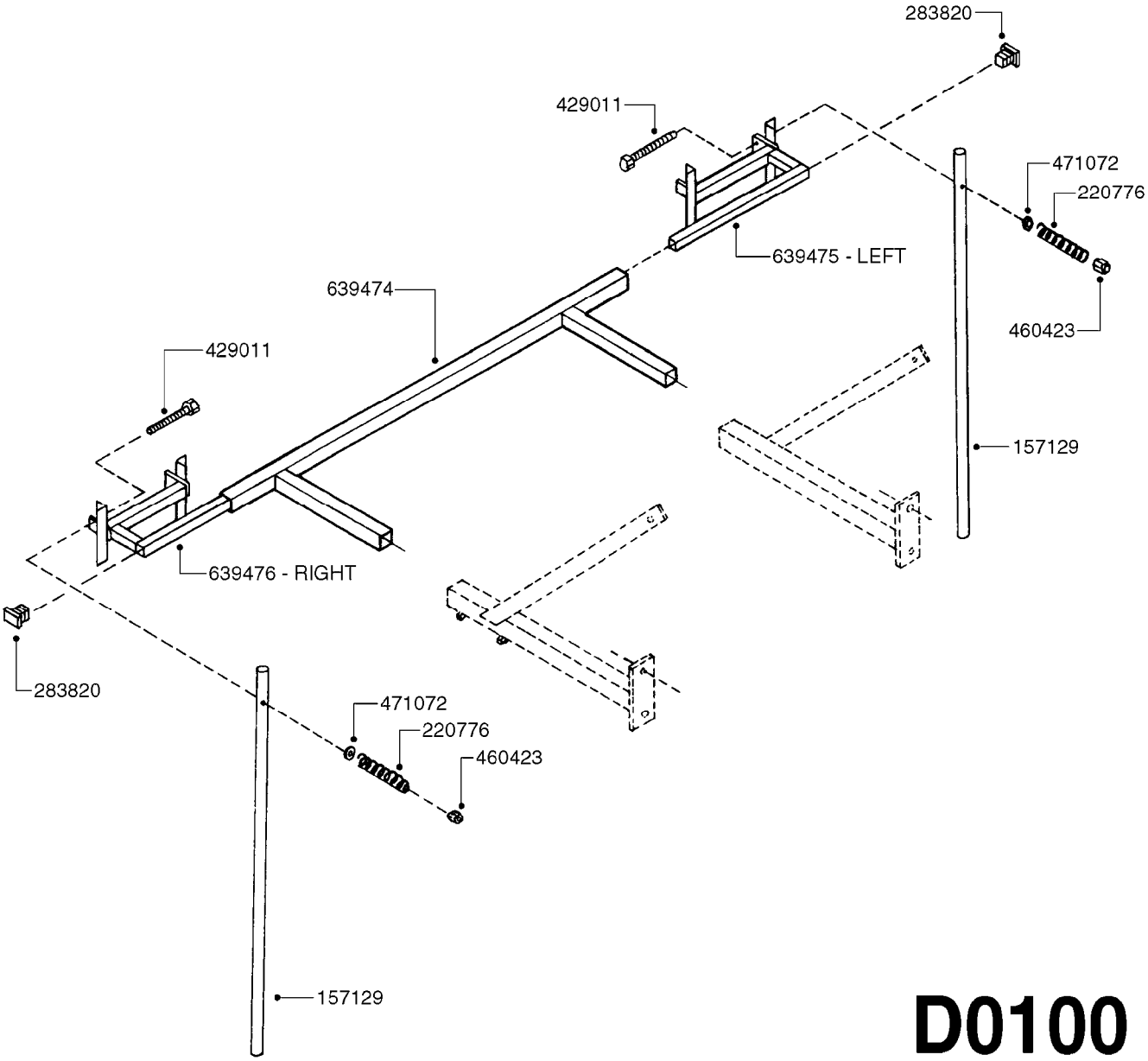

D0100

Agroparts: www.HARDI-INTERNATIONAL.com

REAR DROP ARMS-2 ROW GRAPE B20
D0100-HIN, 01:01:16

Date 12.08.2020 11:37

parts-nº	order qty	description
157129	1	ROD
220776	1	MUELLE REPOSAPIES CON TURBOFILLER
283820	1	PLUG 30MM / 1-1/4X1/8 SQ TUBE
429011	1	BOLT HEX M10X140
460423	1	NUT HEX M10X1.50 LOCK DIN985A2 SS
471072	1	WASHER M10 EL2
639474	1	BOOM BRACKET REAR - B20/B40
639475	1	BOOM BRACKET LEFT, BACK
639476	1	BOOM BRACKET RIGHT, BACK

BOOM - 2 ROW B40 HZ CENTER
D0110-HIN, 01:01:16

Date 12.08.2020 11:37

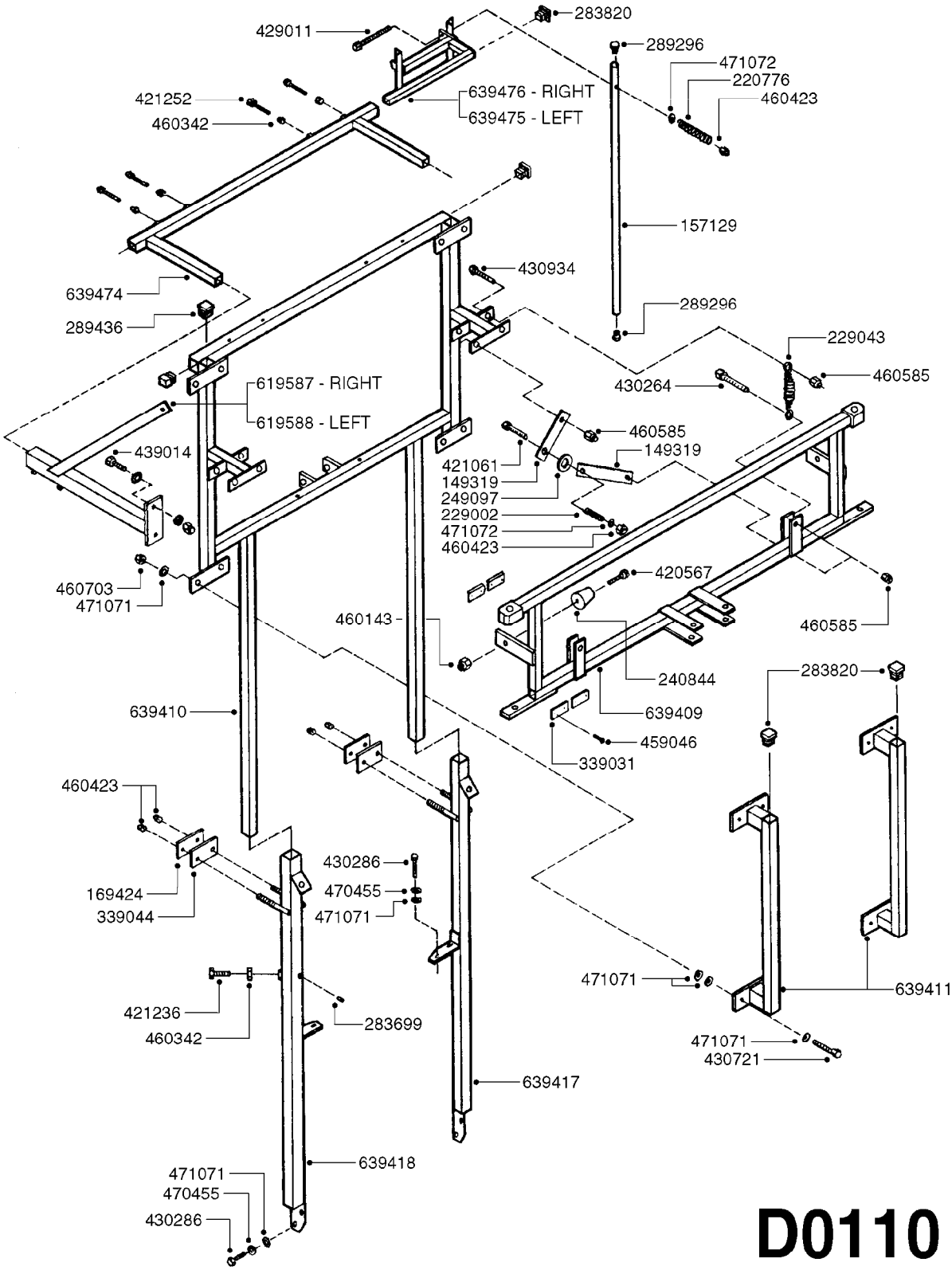

D0110

Agroparts: www.HARDI-INTERNATIONAL.com

BOOM - 2 ROW B40 HZ CENTER
D0110-HIN, 01:01:16

Date 12.08.2020 11:37

parts-n°	order qty	description
149319	1	SUPPORT PLATE B40 CENTER
157129	1	ROD
169424	1	PLATE F. SLIDE SHOE
220776	1	MUELLE REPOSAPIES CON TURBOFILLER
229002	1	TENSION SPRING LP/TP
229043	1	SUSPENSION SPRING
240844	1	RUBBER STOP Ø39X32
249097	1	SPECIAL WASHER
283699	1	GREASE NIPPLE M6X1
283820	1	PLUG 30MM / 1-1/4X1/8 SQ TUBE
289296	1	PLUG D.30
289436	1	COVER PLUG 35X35X1.5
339031	1	SLIDE SHOE - POLY
339044	1	SLIDE SHOE - NYLON
420567	1	BOLT HEX 8.8 DEL M8X30 FT
421061	1	BOLT HEX 8.8 DEL M10X100 DIN931
421236	1	BOLT HEX M10X25 GALV.
421252	1	SCREW M10X30 CAP
429011	1	BOLT HEX M10X140
430264	1	BOLT HEX 8.8 DEL M16X100
430286	1	BOLT HEX 8.8 DEL M12X30 FT
430721	1	BOLT HEX 8.8 DEL M12X40 FT
430934	1	BOLT HEX 8.8 DEL M16X80
439014	1	BOLT HEX 8.8 DEL M12X35
459046	1	SCREW.M-8x12 ALLEN DIN-7984
460143	1	LOCK NUT M8 SST A2 DIN985
460342	1	NUT HEX M10 DEL DIN934
460423	1	NUT HEX M10X1.50 LOCK DIN985A2 SS
460585	1	LOCKING NUT M16 DIN985 A2 SS
460703	1	NUT HEX M12X1.75 LOCK DIN985A2 SS
470455	1	WASHER D12 SPRING
471071	1	WASHER M12 GALV
471072	1	WASHER M10 EL2
619587	1	REAR DROP ARM SUPPORT - RH
619588	1	REAR DROP ARM SUPPORT - LH
639409	1	BOOM CENTER - B40
639410	1	BOOM CENTER SECTION - B40
639411	1	BOOM CENTER BRACKET - B40
639417	1	BOOM MOUNT BRACKET - B40 - LH
639418	1	BOOM MOUNT BRACKET - B40 - RH
639474	1	BOOM BRACKET REAR - B20/B40
639475	1	BOOM BRACKET LEFT, BACK
639476	1	BOOM BRACKET RIGHT, BACK

	Agroparts: www.HARDI-INTERNATIONAL.com	
HARDI	BOOM - 2 ROW B40 HZ OUTER D0120-HIN, 01:01:16	Page 0 Date 12.08.2020 11:37

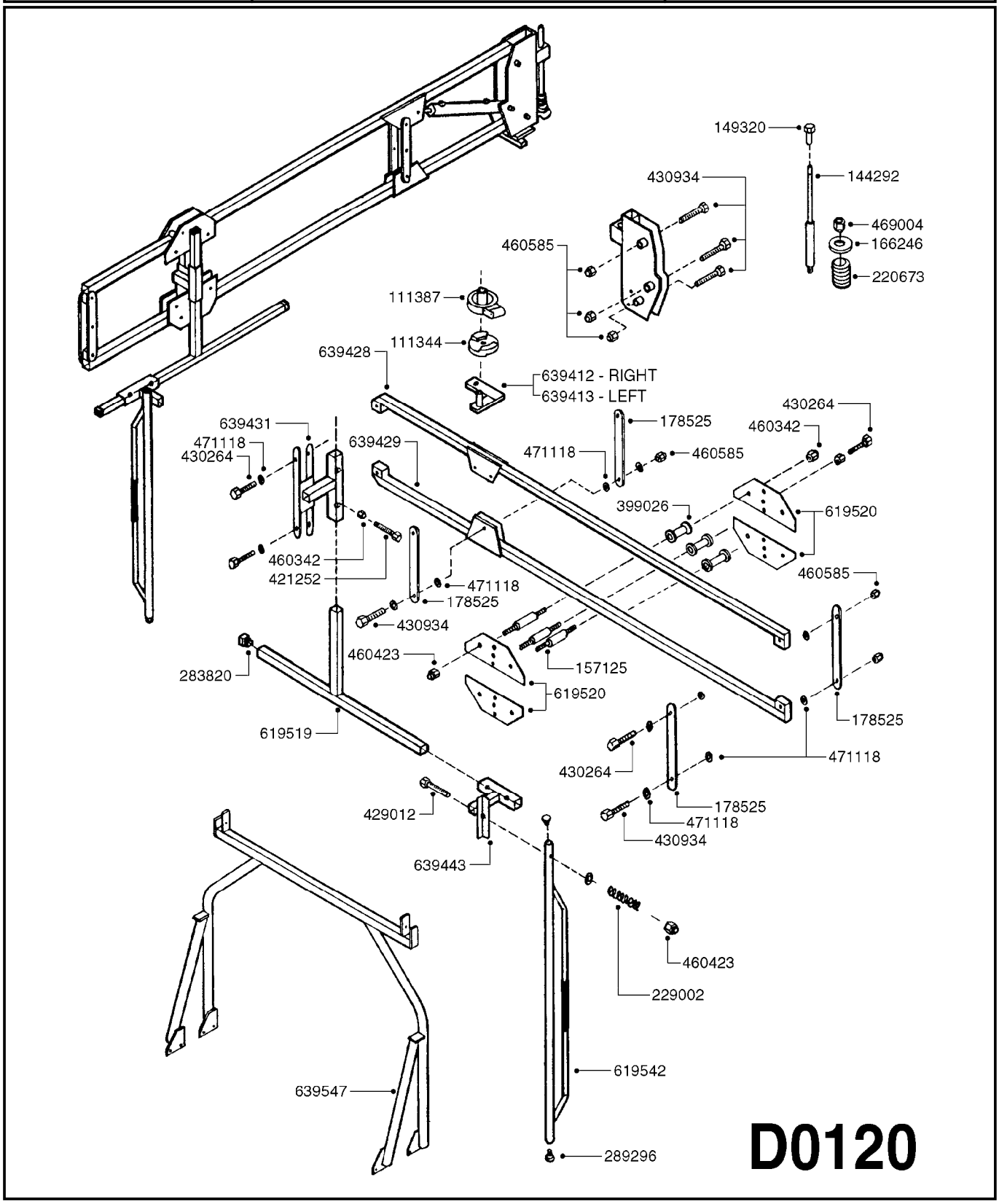

Agroparts: www.HARDI-INTERNATIONAL.com

BOOM - 2 ROW B40 HZ OUTER
D0120-HIN, 01:01:16

Date 12.08.2020 11:37

parts-n°	order qty	description
111344	1	CLAW CLUTCH Ø100/Ø20,5 UNDER PART RED
111387	1	CLAW CLUTCH D100 UPPER PART
144292	1	AXLE F/BREAKAWAY M20/M16 L=426
149320	1	BUSHING
157125	1	SPACER BOLTS M10
166246	1	WASHER CUP D53 F.SPRING
178525	1	SUPPORT PLATE B40 OUTER
220673	1	SPRING F.PIVOT 100 X 51
229002	1	TENSION SPRING LP/TP
283820	1	PLUG 30MM / 1-1/4X1/8 SQ TUBE
289296	1	PLUG D.30
399026	1	NYLON ROLLER
421252	1	SCREW M10X30 CAP
429012	1	BOLT HEX M10X160
430264	1	BOLT HEX 8.8 DEL M16X100
430934	1	BOLT HEX 8.8 DEL M16X80
460342	1	NUT HEX M10 DEL DIN934
460423	1	NUT HEX M10X1.50 LOCK DIN985A2 SS
460585	1	LOCKING NUT M16 DIN985 A2 SS
469004	1	M-20 SPECIAL NUT
471118	1	WASHER D16 TENSION
619519	1	REAR DROP BRACKET - B40
619520	1	OUTER WING PLATE - B40
619542	1	TUBE FOR BRACKET
639412	1	BRACKET F.BREAKAWAY CLUTCH RH
639413	1	BRACKET F.BREAKAWAY CLUTCH LH
639428	1	UPPER WING ARM - B40
639429	1	LOWER WING ARM - B40
639431	1	OUTER GLIDING PIECE - B40
639443	1	BOOM BRCT OUTER F.TWO ROW SYST
639547	1	TRANSPORT BRACKET - B40

BOOM - 2 ROW IRIS
D0125-HIN, 11:12:17

Date 12.08.2020 11:37

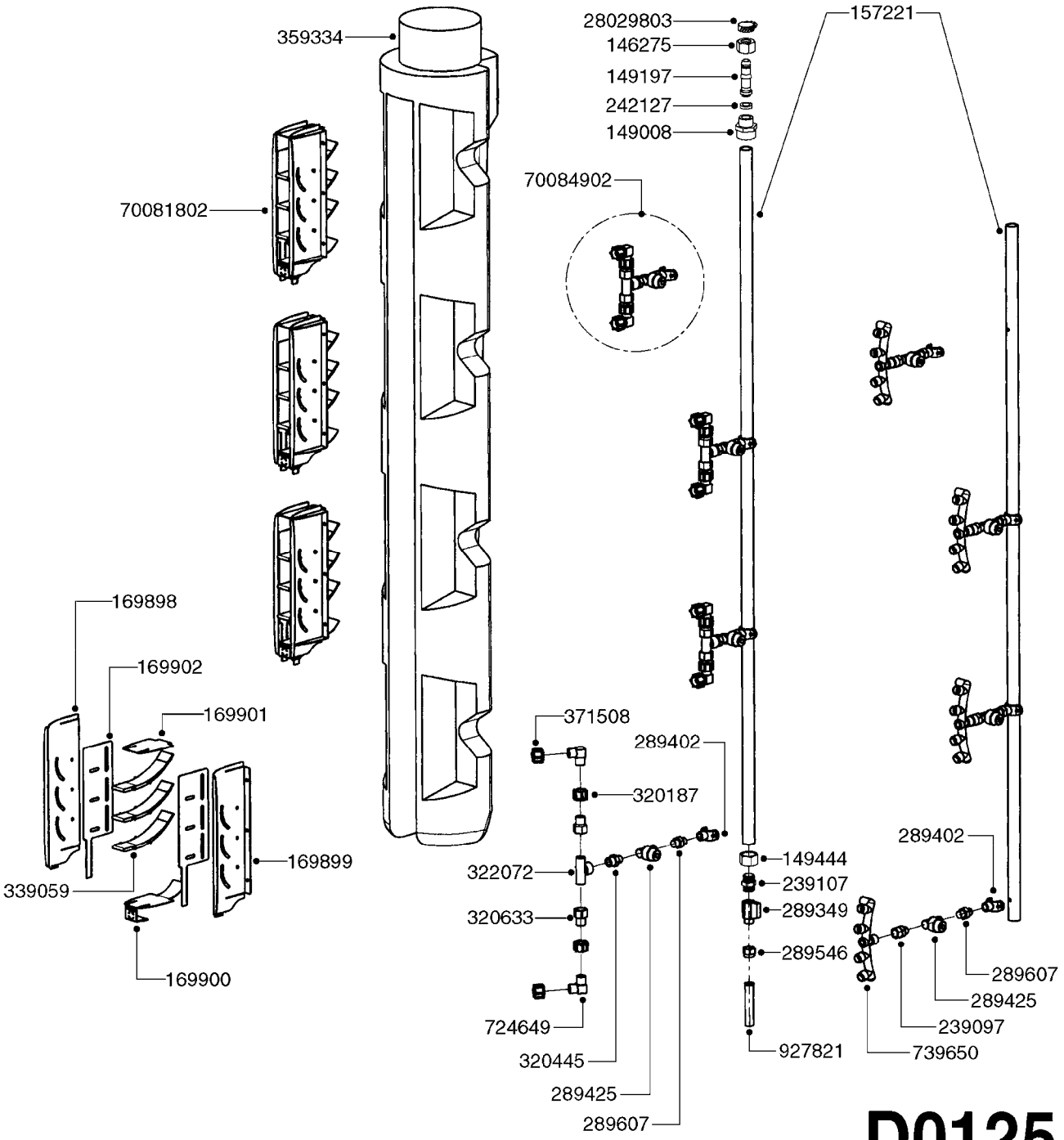

Agroparts: www.HARDI-INTERNATIONAL.com

BOOM - 2 ROW IRIS
D0125-HIN, 11:12:17

Date 12.08.2020 11:37

parts-n°	order qty	description
146275	1	BRASS UNION NUT 1/2
149008	1	FITT.DK 22/100X1/2"
149197	1	HOSE TAIL D.12,7 1/2''
149444	1	FITT. M-22-100 X 3/8" REDUCER
157221	1	4 OUTLET S/S TUBE
169898	1	SHEET 286x104x1 INOX LEFT V2 IRIS
169899	1	SHEET 286x104x1 INOX RIGHT V2 IRIS
169900	1	SHEET 184x62x1 INOX LID F.DIFUSOR V2
169901	1	DIFFUSER
169902	1	DIFFUSER
239097	1	HYDROPNEUMATIC MANIFOLD ADAPT.
239107	1	UNION 3/8 M-M CROM.(0330001-C)
242127	1	WASHER D18X11X4
289349	1	BALL VALVE 3/8" M-H
289402	1	CLAMP STRAIGHT F/NOZZLE HOLDER
289425	1	NON-DRIP H1/4" ON/OFF
289546	1	NUT F.NOZZLE HOLDER ZENIT
289607	1	UNION 1/4" HYDRAULIC
320187	1	FITT.DK CAP 3/8" BSP BLACK
320445	1	FITT.DK HN 1/4"X3/8" BSP
320633	1	FITT.DK HN 3/8"M X 3/8"F BSP
322072	1	FITT.DK TEE 3/8'X3/8'X3/8' BSP
339059	1	DIFFUSER FIN
359334	1	4 OUTLET TUBE ASSY.
371508	1	NOZZLE CONE JET 1299-08 LILAC
724649	1	NOZZLE FITTING 90 DEGREE
739650	1	CURVED BRASS NOZZLE ASSEMBLY
927821	1	CLEAR HOSE D12X10 PA1012
28029803	1	CLAMP HOSE GEAR P1/2" 6708
70081802	1	SPOUTS
70084902	1	DOUBLE NOZZLE ASSY.

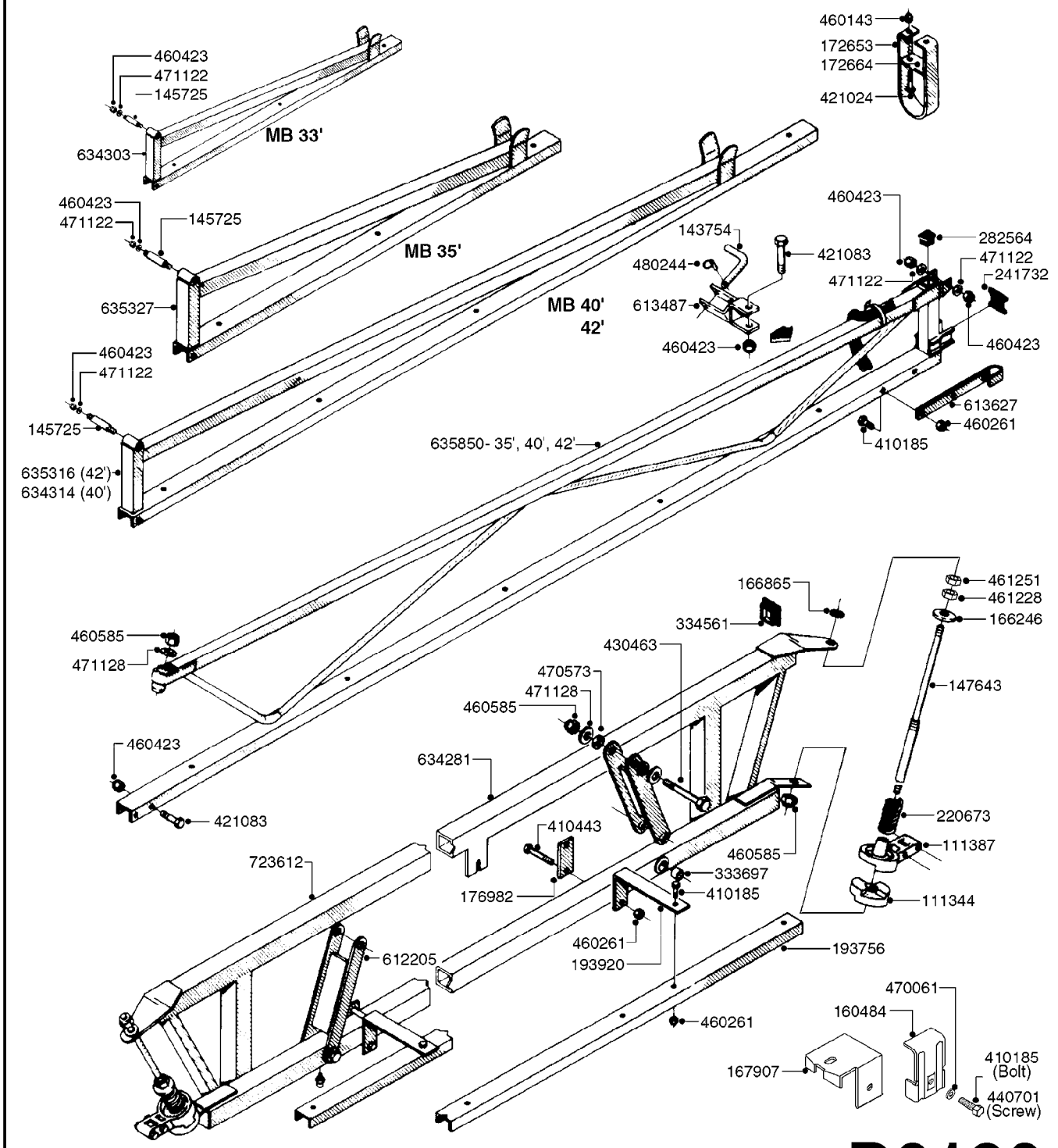
460143
172653
172664
421024
460423
471122
145725
634303
MB 33'
460423
471122
145725
635327
MB 35'
460423
471122
145725
635316 (42')
634314 (40')
MB 40'
42'
143754
480244
613487
460423
421083
460423
282564
471122
471122
241732
460423
613627
460261
410185
635850- 35', 40', 42'
460585
471128
460423
421083
166865
334561
430463
470573
471128
460585
634281
410443
176982
723612
612205
460585
333697
410185
460261
193920
193756
460261
461251
461228
166246
147643
220673
111387
111344
470061
160484
167907
410185
(Bolt)
440701
(Screw)

D0130

Agroparts: www.HARDI-INTERNATIONAL.com

BOOM - MB 35' 40' 42'
D0130-HIN, 26:07:16

Date 12.08.2020 11:37

parts-n°	order qty	description
111344	1	CLAW CLUTCH Ø100/Ø20,5 UNDER PART RED
111387	1	CLAW CLUTCH D100 UPPER PART
143754	1	PIN D10 X 56
145725	1	PIN FOR 12 MB BOOM
147643	1	AXLE F.BM BRKWY. W. ZERT L=426
160484	1	WIRE GUIDE FOR DROP-LEG
166246	1	WASHER CUP D53 F.SPRING
166865	1	WASHER D35/D25X2
167907	1	NOZZ. HOLD. KIT F/ADJ. BOOM
172653	1	WING TIP GUARD
172664	1	FLATBAR BACKING PLATE
176982	1	RETAINING PLATE
193756	1	TRACK MB 10,6/12,6M
193920	1	BRACKET F.NOZZLE TRACK
220673	1	SPRING F.PIVOT 100 X 51
241732	1	RUBBER STOP FOR MB
282564	1	PLUG 35MM SQ.BLACK
333697	1	BUSHING D22/D16x25
334561	1	PLUG 50x50x2 F.SQ.TUBE
410185	1	BOLT HEX 8.8 DEL M6X16
410443	1	BOLT HEX 8.8 DEL M6X70
421024	1	BOLT HEX 8.8 DEL M8X60
421083	1	BOLT HEX 8.8 DEL M10X65
430463	1	BOLT HEX 8.8 DEL M16X110
440701	1	SCREW NO.14 3/4" PLATED
460143	1	LOCK NUT M8 SST A2 DIN985
460261	1	NUT HEX M6X1.00 LOCK DIN985 A2 SS
460423	1	NUT HEX M10X1.50 LOCK DIN985A2 SS
460585	1	LOCKING NUT M16 DIN985 A2 SS
461228	1	NUT HEX M20
461251	1	NUT HEX M20 X 2.5 JAMB
470061	1	WASHER D11/D7X0.5 LOCK
470573	1	WASHER D29/D17X2 SPRING BLACK
471122	1	WASHER, M10, Ø20/10.5X 2.0, SS
471128	1	WASHER, M16, Ø30/17.0X 3.0, SS
480244	1	PIN SNAP D4.5
612205	1	TRAPEZE ARM,WELDED
613487	1	TRANSPORT FITTINGS FOR SB BOOM
613627	1	LOCK STRAP FOR MB BOOM
634281	1	BOOM CENTER MB 35/40/42
634303	1	BOOM WING OUTER 33' MB L=47'
634314	1	BOOM WING OUTER 40', 45' MB
635316	1	BOOM WING OUTER MB42
635327	1	BOOM WING OUTER 35'MB L=58.5"
635850	1	BOOM WING INNER MB35/40/42
723612	1	CENTER PART MB BOOM

BOOM - MB 45' 50'
D0140-HIN, 26:07:16

Date 12.08.2020 11:37

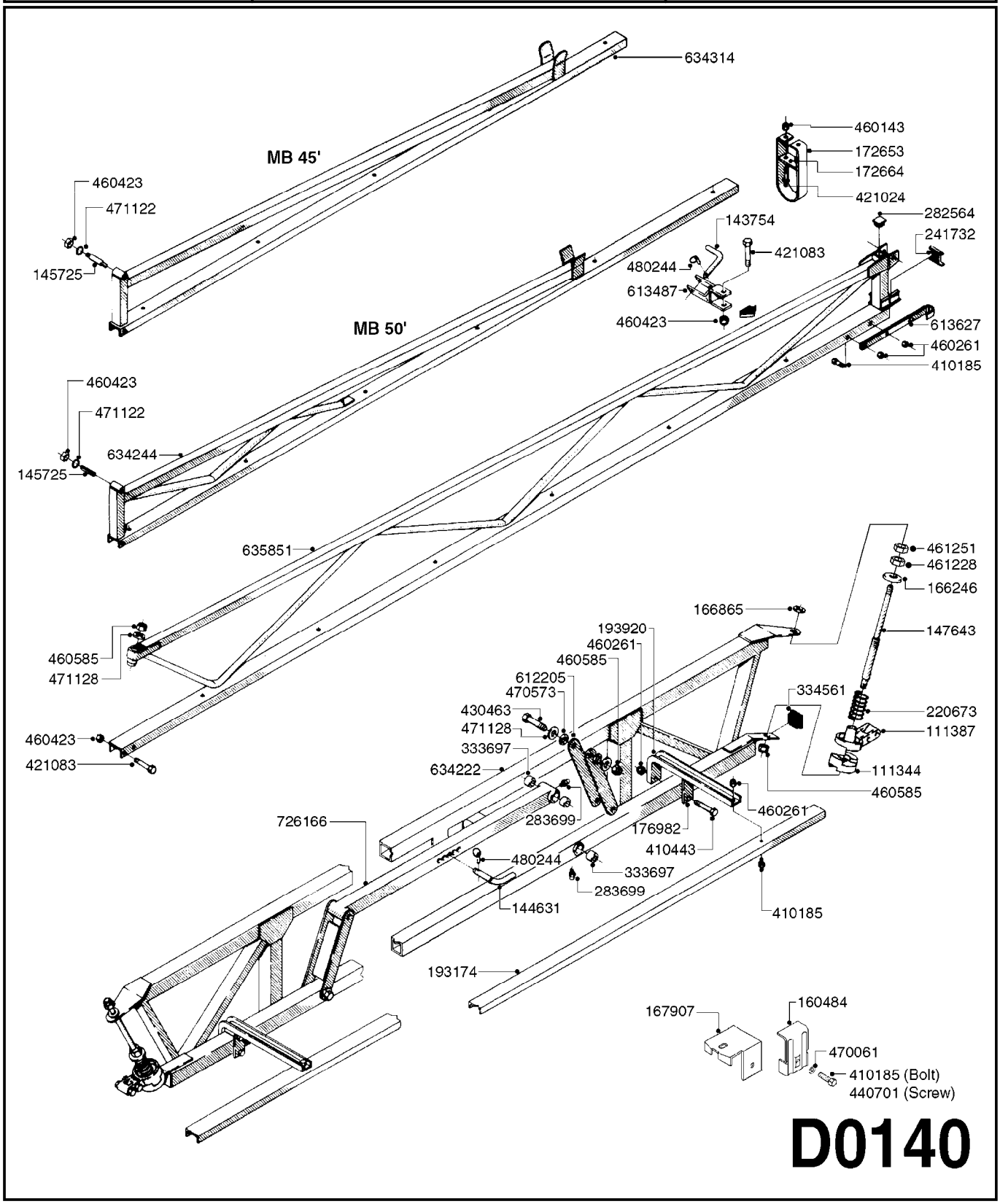

D0140

Agroparts: www.HARDI-INTERNATIONAL.com

BOOM - MB 45' 50'
D0140-HIN, 26:07:16

Date 12.08.2020 11:37

parts-n°	order qty	description
111344	1	CLAW CLUTCH Ø100/Ø20,5 UNDER PART RED
111387	1	CLAW CLUTCH D100 UPPER PART
143754	1	PIN D10 X 56
144631	1	LOCKING PAWL
145725	1	PIN FOR 12 MB BOOM
147643	1	AXLE F.BM BRKWY. W. ZERT L=426
160484	1	WIRE GUIDE FOR DROP-LEG
166246	1	WASHER CUP D53 F.SPRING
166865	1	WASHER D35/D25X2
167907	1	NOZZ. HOLD. KIT F/ADJ. BOOM
172653	1	WING TIP GUARD
172664	1	FLATBAR BACKING PLATE
176982	1	RETAINING PLATE
193174	1	NOZ TRACK 6,6-8,6-10,6-12,M SB
193920	1	BRACKET F.NOZZLE TRACK
220673	1	SPRING F.PIVOT 100 X 51
241732	1	RUBBER STOP FOR MB
282564	1	PLUG 35MM SQ.BLACK
283699	1	GREASE NIPPLE M6X1
333697	1	BUSHING D22/D16x25
334561	1	PLUG 50x50x2 F.SQ.TUBE
410185	1	BOLT HEX 8.8 DEL M6X16
410443	1	BOLT HEX 8.8 DEL M6X70
421024	1	BOLT HEX 8.8 DEL M8X60
421083	1	BOLT HEX 8.8 DEL M10X65
430463	1	BOLT HEX 8.8 DEL M16X110
440701	1	SCREW NO.14 3/4" PLATED
460143	1	LOCK NUT M8 SST A2 DIN985
460261	1	NUT HEX M6X1.00 LOCK DIN985 A2 SS
460423	1	NUT HEX M10X1.50 LOCK DIN985A2 SS
460585	1	LOCKING NUT M16 DIN985 A2 SS
461228	1	NUT HEX M20
461251	1	NUT HEX M20 X 2.5 JAMB
470061	1	WASHER D11/D7X0.5 LOCK
470573	1	WASHER D29/D17X2 SPRING BLACK
471122	1	WASHER, M10, Ø20/10.5X 2.0, SS
471128	1	WASHER, M16, Ø30/17.0X 3.0, SS
480244	1	PIN SNAP D4.5
612205	1	TRAPEZE ARM,WELDED
613487	1	TRANSPORT FITTINGS FOR SB BOOM
613627	1	LOCK STRAP FOR MB BOOM
634222	1	BOOM CENTER 45/50
634244	1	BOOM WING OUTER MB50
634314	1	BOOM WING OUTER 40', 45' MB
635851	1	BOOM WING INNER MB45/50
726166	1	TRAPEZE FRAME

BOOM - MB H-FRAME ML-TRAILER
D0150-HIN, 01:01:16

Date 12.08.2020 11:37

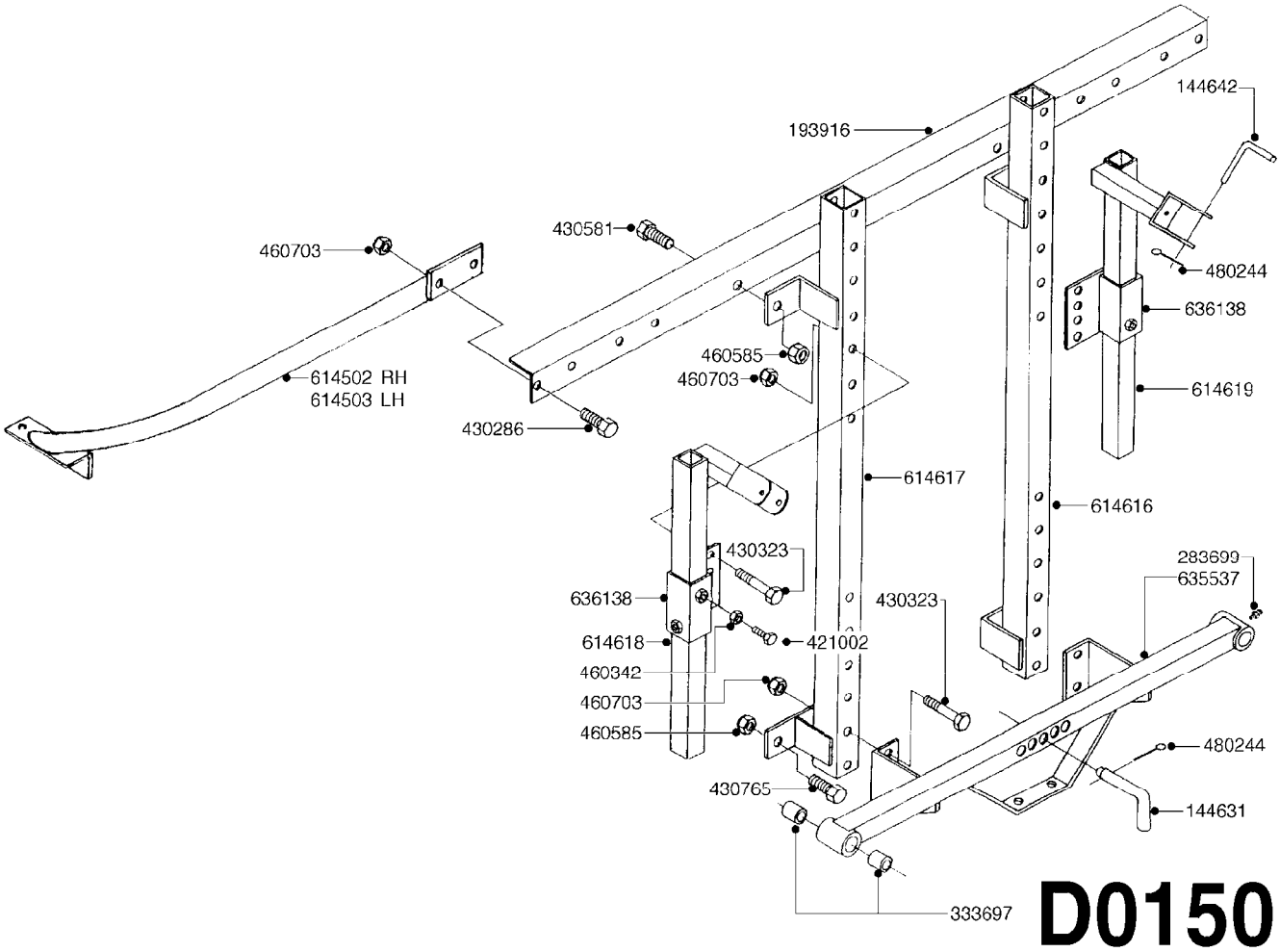

Agroparts: www.HARDI-INTERNATIONAL.com

BOOM - MB H-FRAME ML-TRAILER
D0150-HIN, 01:01:16

Date 12.08.2020 11:37

parts-n°	order qty	description
144631	1	LOCKING PAWL
144642	1	LOCKING PAWL D10X65MM
193916	1	ANGLE IRON FOR MB BOOM BKTS.
283699	1	GREASE NIPPLE M6X1
333697	1	BUSHING D22/D16x25
421002	1	BOLT HEX 8.8 DEL M10X30 FT DIN933
430286	1	BOLT HEX 8.8 DEL M12X30 FT
430323	1	BOLT HEX 8.8 DEL M12X60
430581	1	BOLT HEX 8.8 DEL M16X40 FT
430765	1	BOLT HEX 8.8 DEL M16X55
460342	1	NUT HEX M10 DEL DIN934
460585	1	LOCKING NUT M16 DIN985 A2 SS
460703	1	NUT HEX M12X1.75 LOCK DIN985A2 SS
480244	1	PIN SNAP D4.5
614502	1	INCLINED BRACE RIGHT CAN
614503	1	INCLINED BRACE LEFT CAN
614616	1	H FRAME TUBE TL RIGHT
614617	1	H FRAME TUBE TL LEFT
614618	1	TRANS BRKT. F/MB BOOM (SHORT)
614619	1	TRANS BRKT. F/MB BOOM (LONG)
635537	1	TRAPEZE FRAME
636138	1	BRACKET

	Agroparts: www.HARDI-INTERNATIONAL.com	
HARDI	BOOM-MB H-FRM 35'42' WL SKD MT D0160-HIN, 01:01:16	Page 0 Date 12.08.2020 11:37

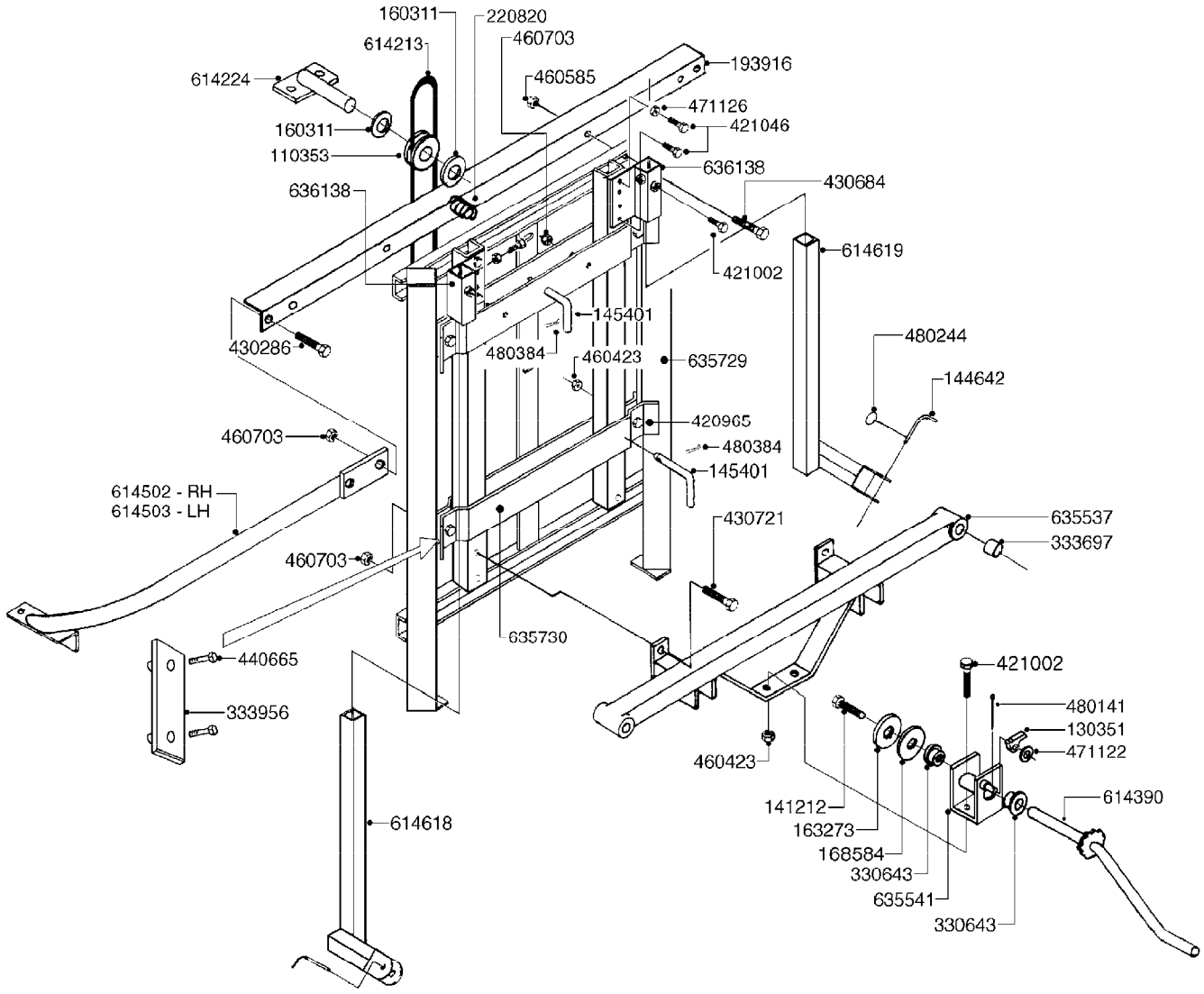

COMPLETE ASSEMBLIES
WHOLEGOODS ITEMS

831239: COMPLETE WINCH KIT

D0160

Agroparts: www.HARDI-INTERNATIONAL.com

BOOM-MB H-FRM 35'42' WL SKD MT
D0160-HIN, 01:01:16

Date 12.08.2020 11:37

parts-n°	order qty	description
110353	1	PULLEY S 63-1 FOR BOOM LIFT
130351	1	PAWL FOR BOOM LIFT
141212	1	BOLT FOR CABLE LOCK
144642	1	LOCKING PAWL D10X65MM
145401	1	PAWL
160311	1	WASHER D30/D20.4X2
163273	1	WASHER FOR WINCH W. D14 RED
168584	1	WASHER F.SPRING D59 RED
193916	1	ANGLE IRON FOR MB BOOM BKTS.
220820	1	SPRING D20.5/2.0 0-50MM
330643	1	NYLON BUSH D28/D20/19
333697	1	BUSHING D22/D16x25
333956	1	SLIDE SHOE 91X25X10
420965	1	M10X40 MACHINE SCREW STAINLESS
421002	1	BOLT HEX 8.8 DEL M10X30 FT DIN933
421046	1	BOLT HEX M8X25/25 A2 SS DIN933
430286	1	BOLT HEX 8.8 DEL M12X30 FT
430684	1	BOLT HEX 8.8 DEL M16X30 FT
430721	1	BOLT HEX 8.8 DEL M12X40 FT
440665	1	SCREW M4.2X16 STAINLESS
460423	1	NUT HEX M10X1.50 LOCK DIN985A2 SS
460585	1	LOCKING NUT M16 DIN985 A2 SS
460703	1	NUT HEX M12X1.75 LOCK DIN985A2 SS
471122	1	WASHER, M10, Ø20/10.5X 2.0, SS
471126	1	WASHER, M8, Ø16/ 8.4X 1.6, SS
480141	1	PIN COTTER M4X20
480244	1	PIN SNAP D4.5
480384	1	PIN COTTER 3/16 x 1-1/2"
614213	1	WIRE W EYE BOLT TR/MB CAN.
614224	1	BRACKET FOR WHEEL
614390	1	HANDLE FOR WINCH
614502	1	INCLINED BRACE RIGHT CAN
614503	1	INCLINED BRACE LEFT CAN
614618	1	TRANS BRKT. F/MB BOOM (SHORT)
614619	1	TRANS BRKT. F/MB BOOM (LONG)
635537	1	TRAPEZE FRAME
635541	1	BRACKET
635729	1	OUTER FRAME OFF H-FRAME
635730	1	FRAME INNER F.MB WINCH LIFT
636138	1	BRACKET
831239	1	WINCH CTN.FOR SM/ESC LIFT

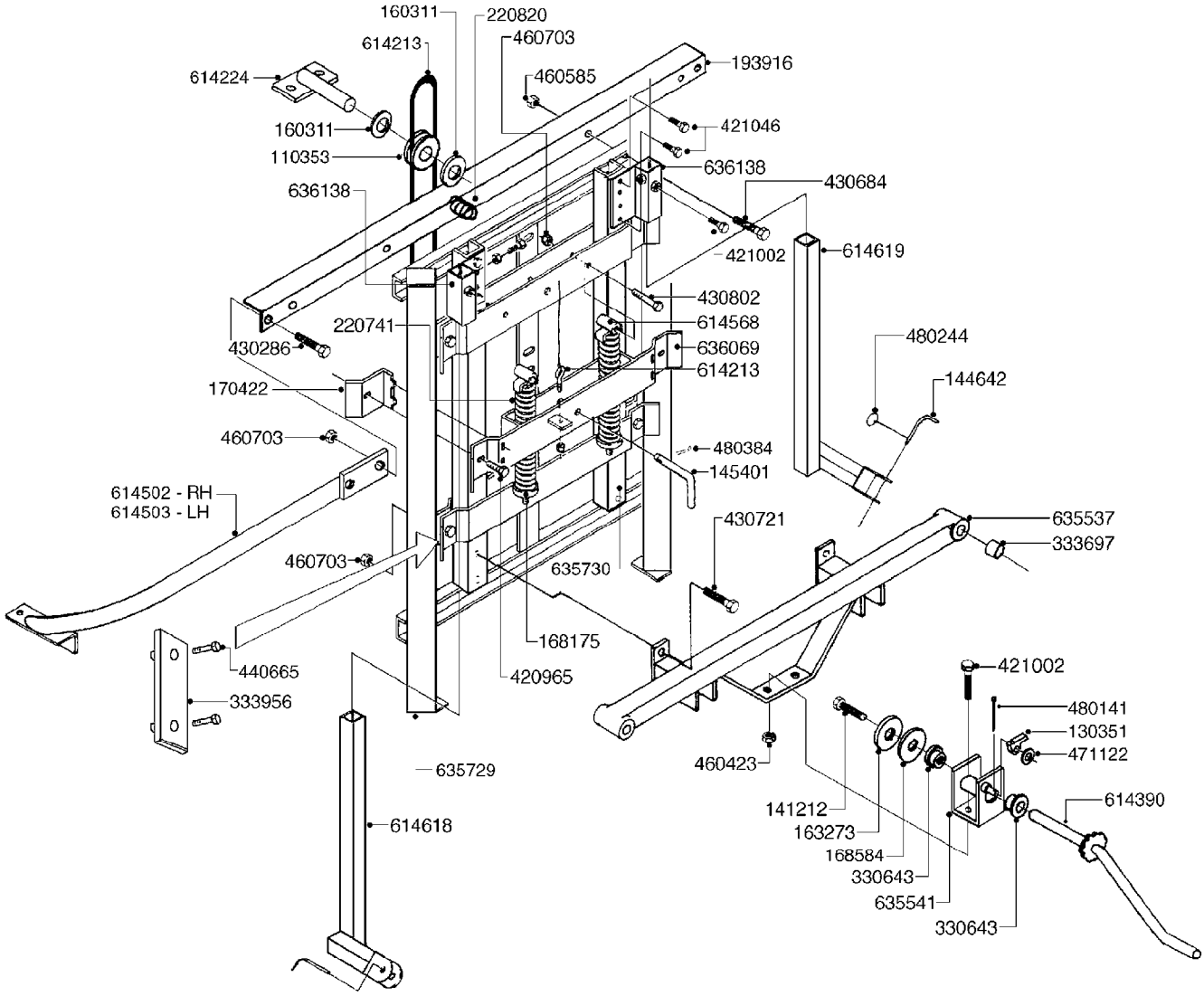

COMPLETE ASSEMBLIES
WHOLEGOODS ITEMS

831239: COMPLETE WINCH KIT

D0170

Agroparts: www.HARDI-INTERNATIONAL.com

BOOM-MB H-FRM 45' 50' WL TRLR
D0170-HIN, 01:01:16

Date 12.08.2020 11:37

parts-n°	order qty	description
110353	1	PULLEY S 63-1 FOR BOOM LIFT
130351	1	PAWL FOR BOOM LIFT
141212	1	BOLT FOR CABLE LOCK
144642	1	LOCKING PAWL D10X65MM
145401	1	PAWL
160311	1	WASHER D30/D20.4X2
163273	1	WASHER FOR WINCH W. D14 RED
168175	1	WASHER FOR SUSPENSION DEL
168584	1	WASHER F.SPRING D59 RED
170422	1	BRACKET F.WINCH SPRING KIT
193916	1	ANGLE IRON FOR MB BOOM BKTS.
220741	1	SPRING D46 X 150
220820	1	SPRING D20.5/2.0 0-50MM
330643	1	NYLON BUSH D28/D20/19
333697	1	BUSHING D22/D16x25
333956	1	SLIDE SHOE 91X25X10
420965	1	M10X40 MACHINE SCREW STAINLESS
421002	1	BOLT HEX 8.8 DEL M10X30 FT DIN933
421046	1	BOLT HEX M8X25/25 A2 SS DIN933
430286	1	BOLT HEX 8.8 DEL M12X30 FT
430684	1	BOLT HEX 8.8 DEL M16X30 FT
430721	1	BOLT HEX 8.8 DEL M12X40 FT
430802	1	BOLT HEX 8.8 DEL M12X75
440665	1	SCREW M4.2X16 STAINLESS
460423	1	NUT HEX M10X1.50 LOCK DIN985A2 SS
460585	1	LOCKING NUT M16 DIN985 A2 SS
460703	1	NUT HEX M12X1.75 LOCK DIN985A2 SS
471122	1	WASHER, M10, Ø20/10.5X 2.0, SS
480141	1	PIN COTTER M4X20
480244	1	PIN SNAP D4.5
480384	1	PIN COTTER 3/16 x 1-1/2"
614213	1	WIRE W EYE BOLT TR/MB CAN.
614224	1	BRACKET FOR WHEEL
614390	1	HANDLE FOR WINCH
614502	1	INCLINED BRACE RIGHT CAN
614503	1	INCLINED BRACE LEFT CAN
614568	1	BOLT
614618	1	TRANS BRKT. F/MB BOOM (SHORT)
614619	1	TRANS BRKT. F/MB BOOM (LONG)
635537	1	TRAPEZE FRAME
635541	1	BRACKET
635729	1	OUTER FRAME OFF H-FRAME
635730	1	FRAME INNER F.MB WINCH LIFT
636069	1	BKT. FOR MB WINCH SPRING KIT
636138	1	BRACKET
831239	1	WINCH CTN.FOR SM/ESC LIFT

BOOM - MB H-FRAME HL
D0180-HIN, 31:03:16

Date 12.08.2020 11:37

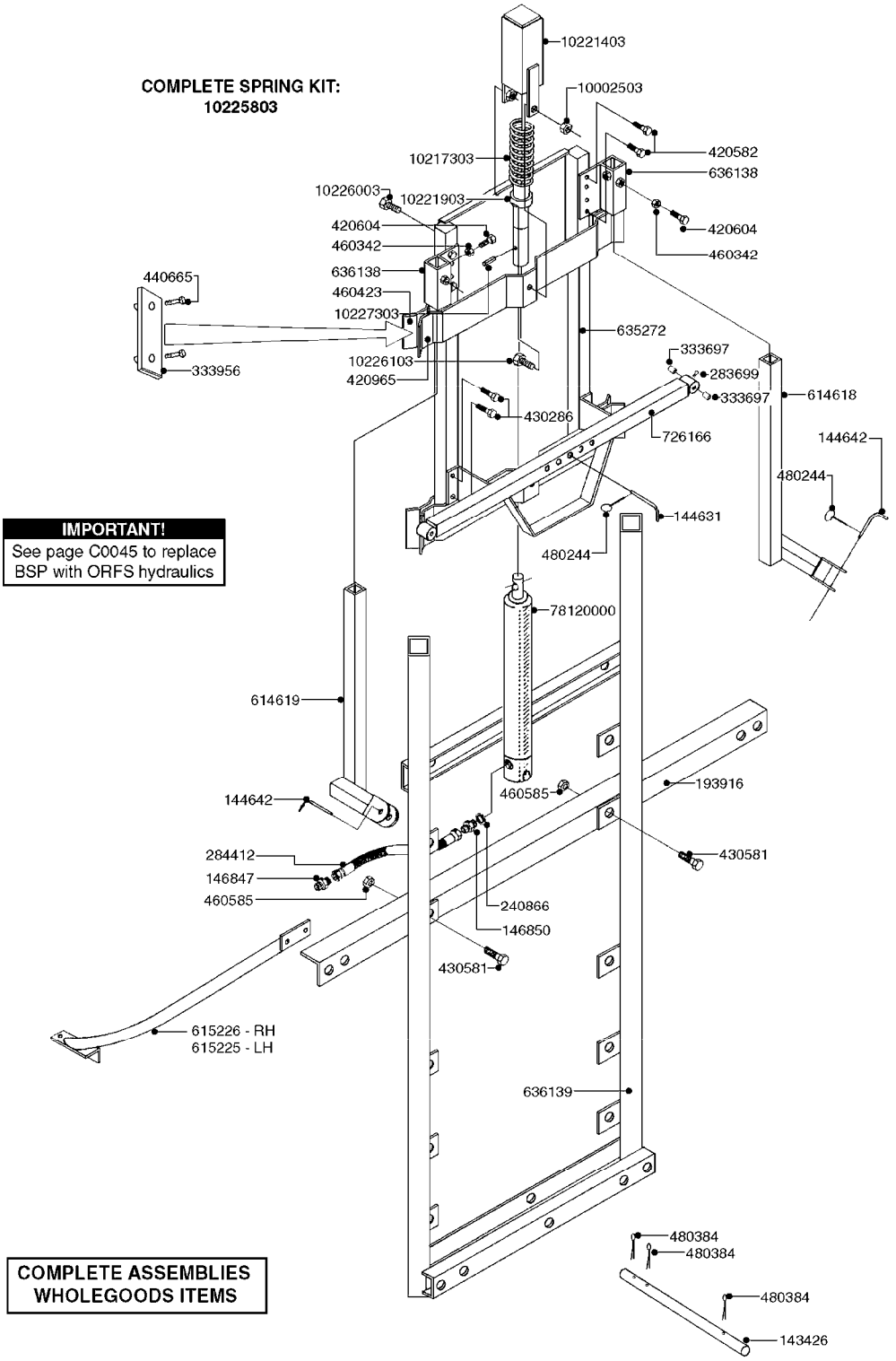

D0180

BOOM - MB H-FRAME HL
D0180-HIN, 31:03:16

Date 12.08.2020 11:37

parts-n°	order qty	description
143426	1	PIN 20x160mm F/HYD/CYL.
144631	1	LOCKING PAWL
144642	1	LOCKING PAWL D10X65MM
146847	1	HEX NIPPLE 1/2"X3/8"
146850	1	HEX NIPPLE 3/8"x3/8" - 1.8mm
193916	1	ANGLE IRON FOR MB BOOM BKTS.
240866	1	DOWTYSEAL 3/8"
283699	1	GREASE NIPPLE M6X1
284412	1	HOSE HY 3/8" X 315" STR+STR
333697	1	BUSHING D22/D16x25
333956	1	SLIDE SHOE 91X25X10
420582	1	BOLT HEX 8.8 DEL M8X20 FT A2
420604	1	BOLT HEX 8.8 DEL M10X25 FT DIN933
420965	1	M10X40 MACHINE SCREW STAINLESS
430286	1	BOLT HEX 8.8 DEL M12X30 FT
430581	1	BOLT HEX 8.8 DEL M16X40 FT
440665	1	SCREW M4.2X16 STAINLESS
460342	1	NUT HEX M10 DEL DIN934
460423	1	NUT HEX M10X1.50 LOCK DIN985A2 SS
460585	1	LOCKING NUT M16 DIN985 A2 SS
480244	1	PIN SNAP D4.5
480384	1	PIN COTTER 3/16 x 1-1/2"
614618	1	TRANS BRKT. F/MB BOOM (SHORT)
614619	1	TRANS BRKT. F/MB BOOM (LONG)
615225	1	SIDE BRACE LEFT 500 EAGLE
615226	1	SIDE BRACE RIGHT 500 EAGLE
635272	1	SLIDE
636138	1	BRACKET
636139	1	H FRAME HY LIFT 300/500 MB
726166	1	TRAPEZE FRAME
10002503	1	NUT HEX NC 1/2"
10217303	1	SPRING FOR 45/50 MB HY LIFT
10221403	1	BOX W/M F.SPRING 45/50 MB HY
10221903	1	SLEEVE W/M F.45/50 MB HY
10225803	1	SPRING KIT FOR MB HYDRAULIC
10226003	1	BOLT HEX 3/8 NC GR.5 00.75"
10226103	1	BOLT HEX 1/2 NC GR.2 01.00"
10227303	1	PIN ROLL 3/16 X 1.25
78120000	1	CYL.TELESCOPING Ø50/40/25_1100

BOOM - MB 3-PT HITCH FRAME
D0190-HIN, 01:01:16

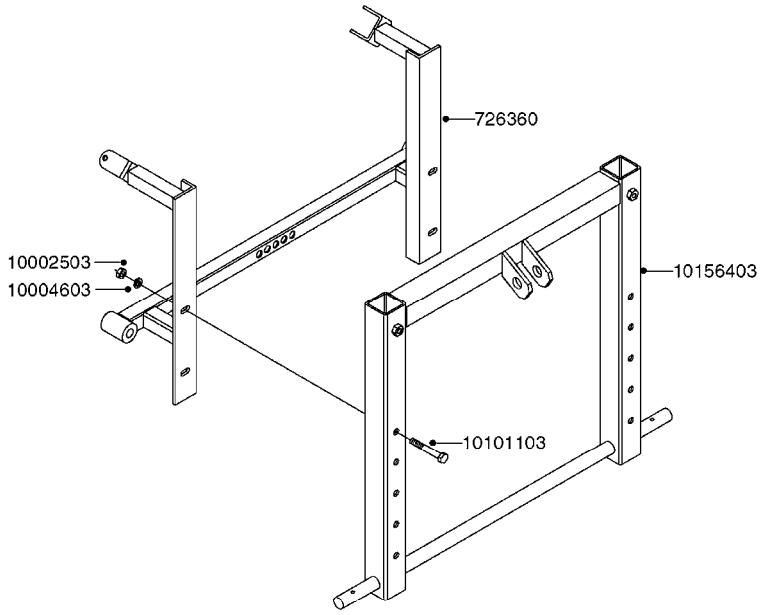

35' TO 42' MB BOOM

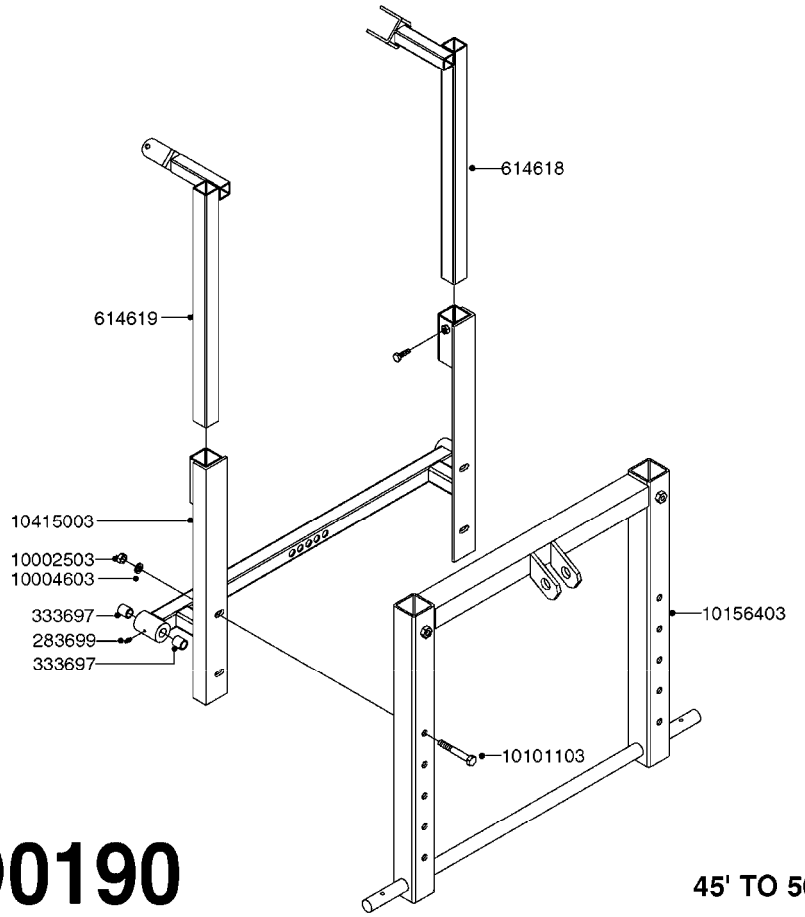

D0190

45' TO 50' MB BOOM

Agroparts: www.HARDI-INTERNATIONAL.com

BOOM - MB 3-PT HITCH FRAME
D0190-HIN, 01:01:16

Date 12.08.2020 11:37

parts-n°	order qty	description
10002503	1	NUT HEX NC 1/2"
10004603	1	WASHER LOCK 1/2"
10101103	1	BOLT HEX 1/2 NC GR.2 03.50"
10156403	1	FRAME, 3 PT. HITCH
10415003	1	TRAPEZE BKT.3PT.45/50
283699	1	GREASE NIPPLE M6X1
333697	1	BUSHING D22/D16x25
614618	1	TRANS BRKT. F/MB BOOM (SHORT)
614619	1	TRANS BRKT. F/MB BOOM (LONG)
726360	1	BKT.NK MB MOUNT

HARDI	**Agroparts: www.HARDI-INTERNATIONAL.com**	
	BOOM - MB ATV 40' D0200-HIN, 01:01:16	Page 0 Date 12.08.2020 11:37

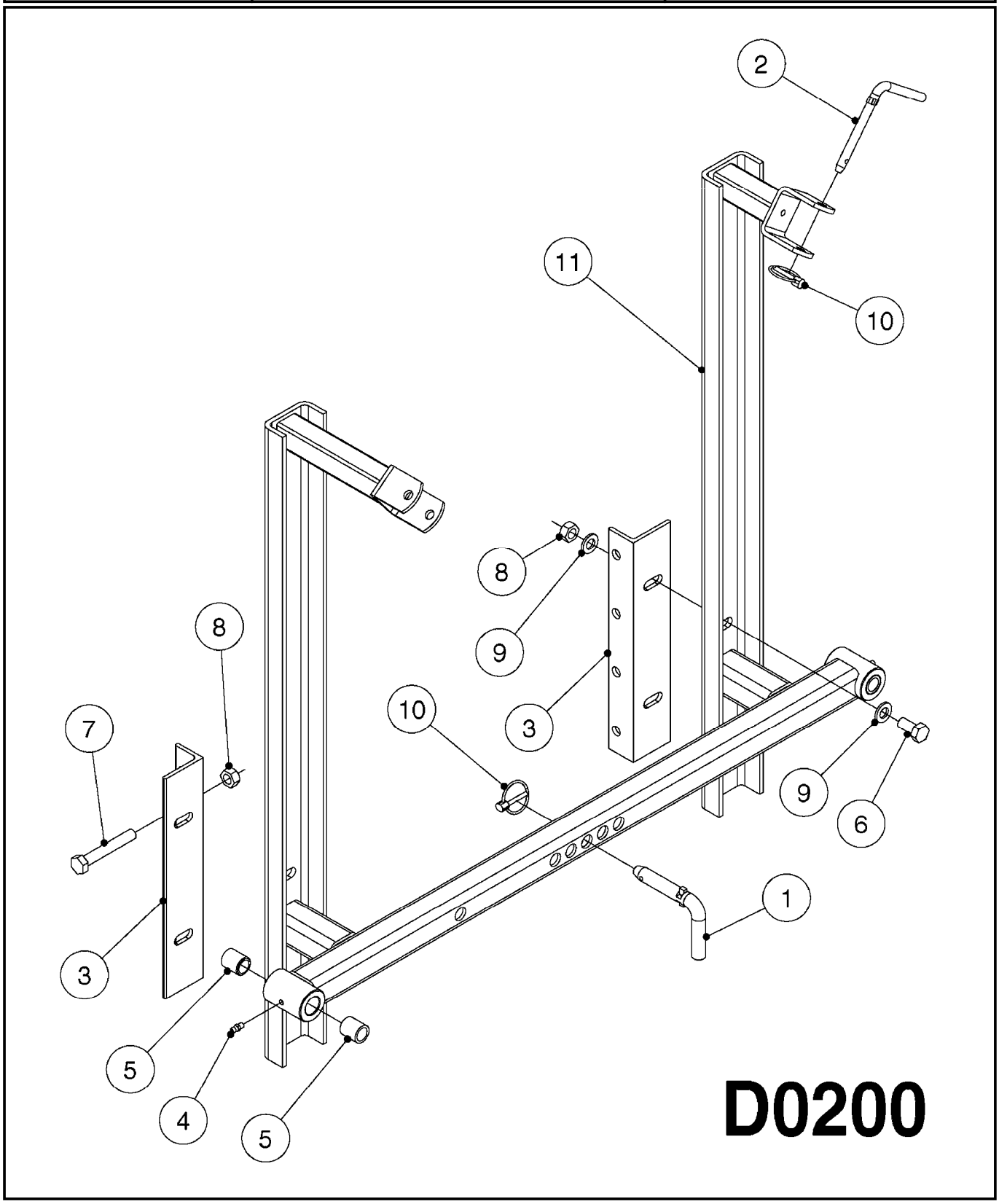

Agroparts: www.HARDI-INTERNATIONAL.com

BOOM - MB ATV 40'
D0200-HIN, 01:01:16

Date 12.08.2020 11:37

Pos.	parts-nº	order qty	description
1	144631	1	LOCKING PAWL
2	144642	1	LOCKING PAWL D10X65MM
3	193303	1	SUPPORTING ARM FOR SB BOOM
4	283699	1	GREASE NIPPLE M6X1
5	333697	1	BUSHING D22/D16x25
6	430522	1	BOLT HEX 8.8 DEL M12X25 FT
7	430846	1	BOLT HEX 8.8 DEL M12X80
8	460703	1	NUT HEX M12X1.75 LOCK DIN985A2 SS
9	471127	1	WASHER, M12, Ø24/13X24X2.5 SS
10	480244	1	PIN SNAP D4.5
11	726360	1	BKT.NK MB MOUNT

BOOM - MB AIR SUSPSN (HL ONLY)
D0210-HIN, 01:01:16

Date 12.08.2020 11:37

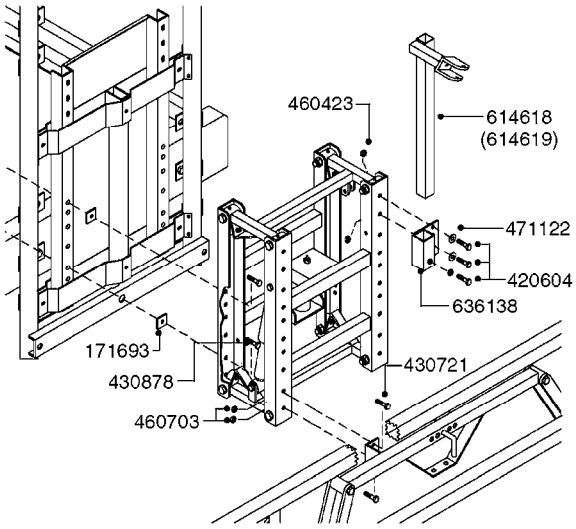

MB Air Kit (Infield): 10477203

COMPLETE ASSEMBLIES
WHOLEGOODS ITEMS

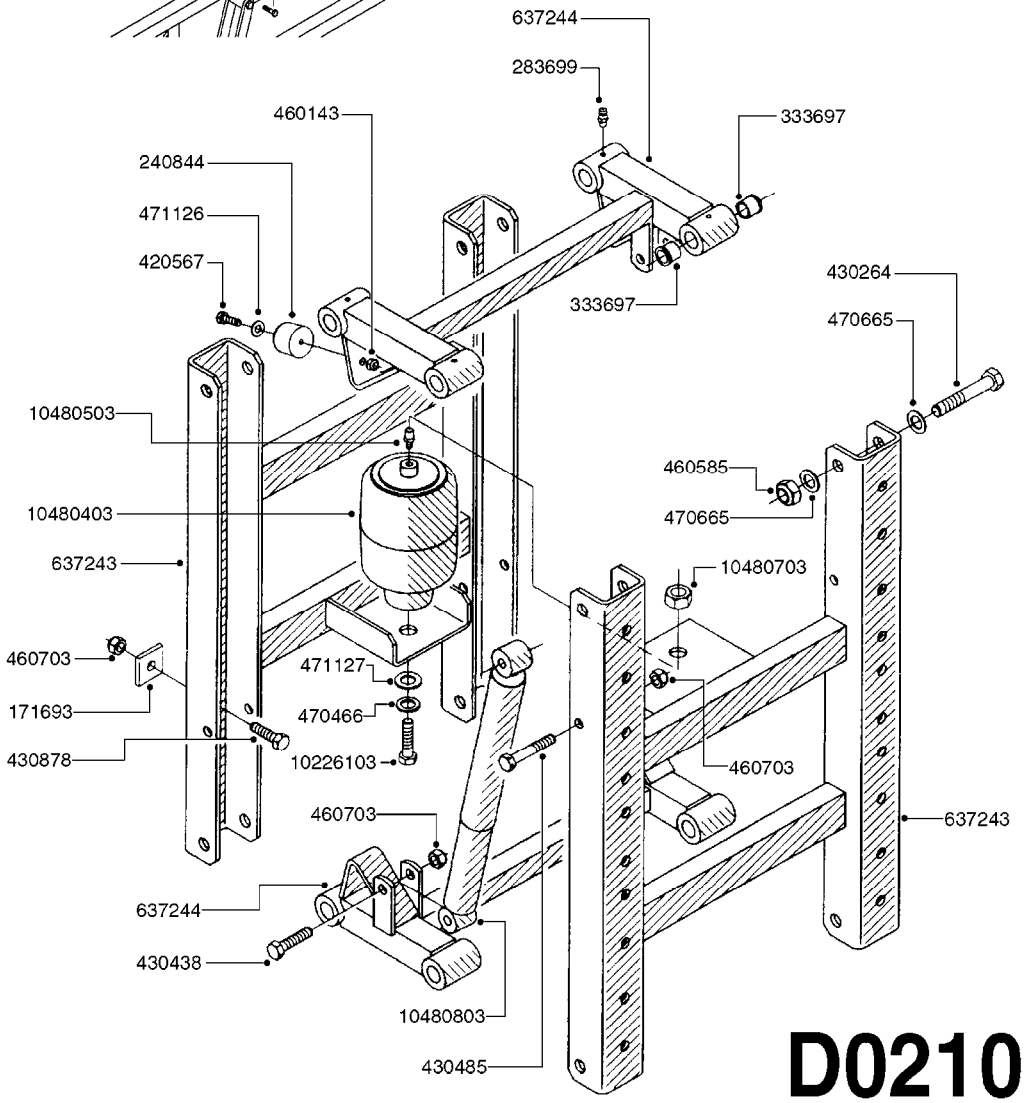

D0210

Agroparts: www.HARDI-INTERNATIONAL.com

BOOM - MB AIR SUSPSN (HL ONLY)
D0210-HIN, 01:01:16

Date 12.08.2020 11:37

parts-n°	order qty	description
10226103	1	BOLT HEX 1/2 NC GR.2 01.00"
10477203	1	MB AIR SUSPENSION KIT
10480403	1	AIR BAG FOR MB SUSPENSION
10480503	1	TANK VALVE 1/8"NPT
10480703	1	NUT HEX NF 3/4"JAM
10480803	1	SHOCK FOR MB SUSP.
171693	1	SPACER M40X40X3/D13
240844	1	RUBBER STOP Ø39X32
283699	1	GREASE NIPPLE M6X1
333697	1	BUSHING D22/D16x25
420567	1	BOLT HEX 8.8 DEL M8X30 FT
420604	1	BOLT HEX 8.8 DEL M10X25 FT DIN933
430264	1	BOLT HEX 8.8 DEL M16X100
430438	1	BOLT HEX 8.8 DEL M12X65
430485	1	BOLT HEX 8.8 DEL M12X90
430721	1	BOLT HEX 8.8 DEL M12X40 FT
430878	1	BOLT HEX 8.8 DEL M12X45 DIN931
460143	1	LOCK NUT M8 SST A2 DIN985
460423	1	NUT HEX M10X1.50 LOCK DIN985A2 SS
460585	1	LOCKING NUT M16 DIN985 A2 SS
460703	1	NUT HEX M12X1.75 LOCK DIN985A2 SS
470466	1	WASHER D21.1/D12.2X2.5 LOCK
470665	1	WASHER D16.5/D26X1.2 LOCK
471122	1	WASHER, M10, Ø20/10.5X 2.0, SS
471126	1	WASHER, M8, Ø16/ 8.4X 1.6, SS
471127	1	WASHER, M12, Ø24/13X24X2.5 SS
614618	1	TRANS BRKT. F/MB BOOM (SHORT)
614619	1	TRANS BRKT. F/MB BOOM (LONG)
636138	1	BRACKET
637243	1	FRAME F.MB-SUSPENSION
637244	1	SWING ARM F.MB-SUSPENSION

BOOM FALCON H FRAME & CENTER
D0220-HIN, 01:04:19

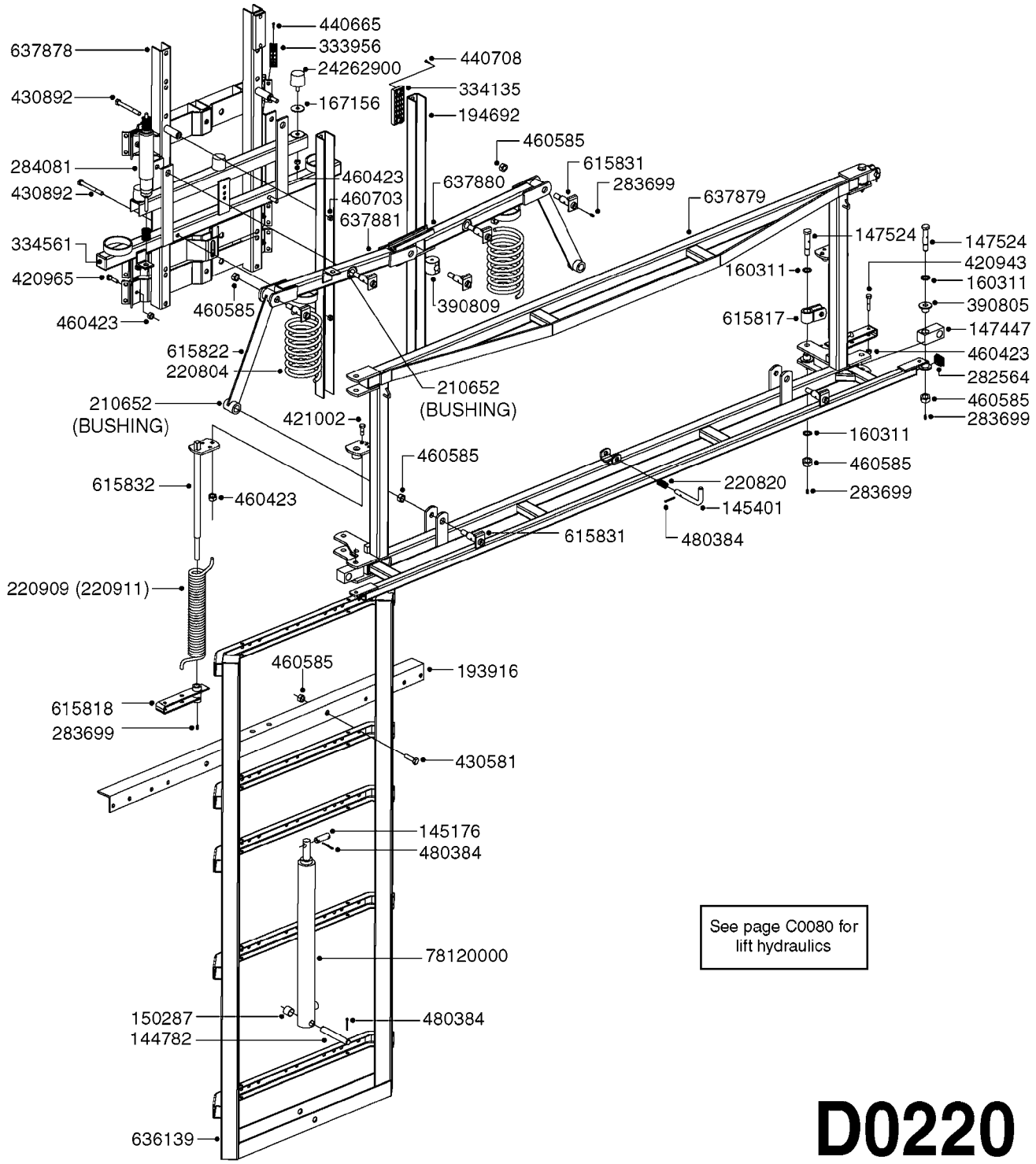

Agroparts: www.HARDI-INTERNATIONAL.com

BOOM FALCON H FRAME & CENTER
D0220-HIN, 01:04:19

Date 12.08.2020 11:37

parts-n°	order qty	description
144782	1	SHAFT 20 X 140
145176	1	PIN D19.8 X 60
145401	1	PAWL
147447	1	PIVOT BLOCK INNER WING SPL
147524	1	PIN F. PIVOT SPL
150287	1	SPACER D25.4/1.5 L=15MM
160311	1	WASHER D30/D20.4X2
167156	1	WASHER D46.5/D12.4X2.5
193916	1	ANGLE IRON FOR MB BOOM BKTS.
194692	1	U-CHANNEL SPL CENTER
210652	1	BUSHING TEFLON D25/D22X20
220804	1	SPRING 130/12/320 EAGLE 45'
220820	1	SPRING D20.5/2.0 0-50MM
220909	1	SPRING F. BREAKAWAY R.H. SPL
220911	1	SPRING F. BREAKAWAY L.H. SPL
282564	1	PLUG 35MM SQ.BLACK
283699	1	GREASE NIPPLE M6X1
284081	1	SHOCK ABSORBER 150 1121
333956	1	SLIDE SHOE 91X25X10
334135	1	SLIDE SHOE 140X45X15
334561	1	PLUG 50x50x2 F.SQ.TUBE
390805	1	BUSHING F. PIVOT SPL
390809	1	SPACER 50X48 D22/D8 POLY
420943	1	BOLT HEX 8.8 DEL M10X50
420965	1	M10X40 MACHINE SCREW STAINLESS
421002	1	BOLT HEX 8.8 DEL M10X30 FT DIN933
430581	1	BOLT HEX 8.8 DEL M16X40 FT
430892	1	BOLT HEX 8.8 DEL M12X110
440665	1	SCREW M4.2X16 STAINLESS
440708	1	SCREW M5.5X16 SELF TAPPING SS
460423	1	NUT HEX M10X1.50 LOCK DIN985A2 SS
460585	1	LOCKING NUT M16 DIN985 A2 SS
460703	1	NUT HEX M12X1.75 LOCK DIN985A2 SS
480384	1	PIN COTTER 3/16 x 1-1/2"
615817	1	FORK F.CYLINDER SPL
615818	1	BREAKAWAY LEVER SPL
615822	1	TRAPEZE ARM FALCON
615831	1	PIN F. CENTER SECTION SPL
615832	1	PIN F. BREAKAWAY SPRING SPL
636139	1	H FRAME HY LIFT 300/500 MB
637878	1	CENTER SLIDE SPL
637879	1	CENTER FRAME SPL
637880	1	SUSPENSION ARM R.H. SPL
637881	1	SUSPENSION ARM L.H. SPL
24262900	1	RUBBER STOP D50X40 M10X33
78120000	1	CYL.TELESCOPING Ø50/40/25_1100

BOOM FALCON PARALIFT CENTER
D0225-HIN, 01:04:19

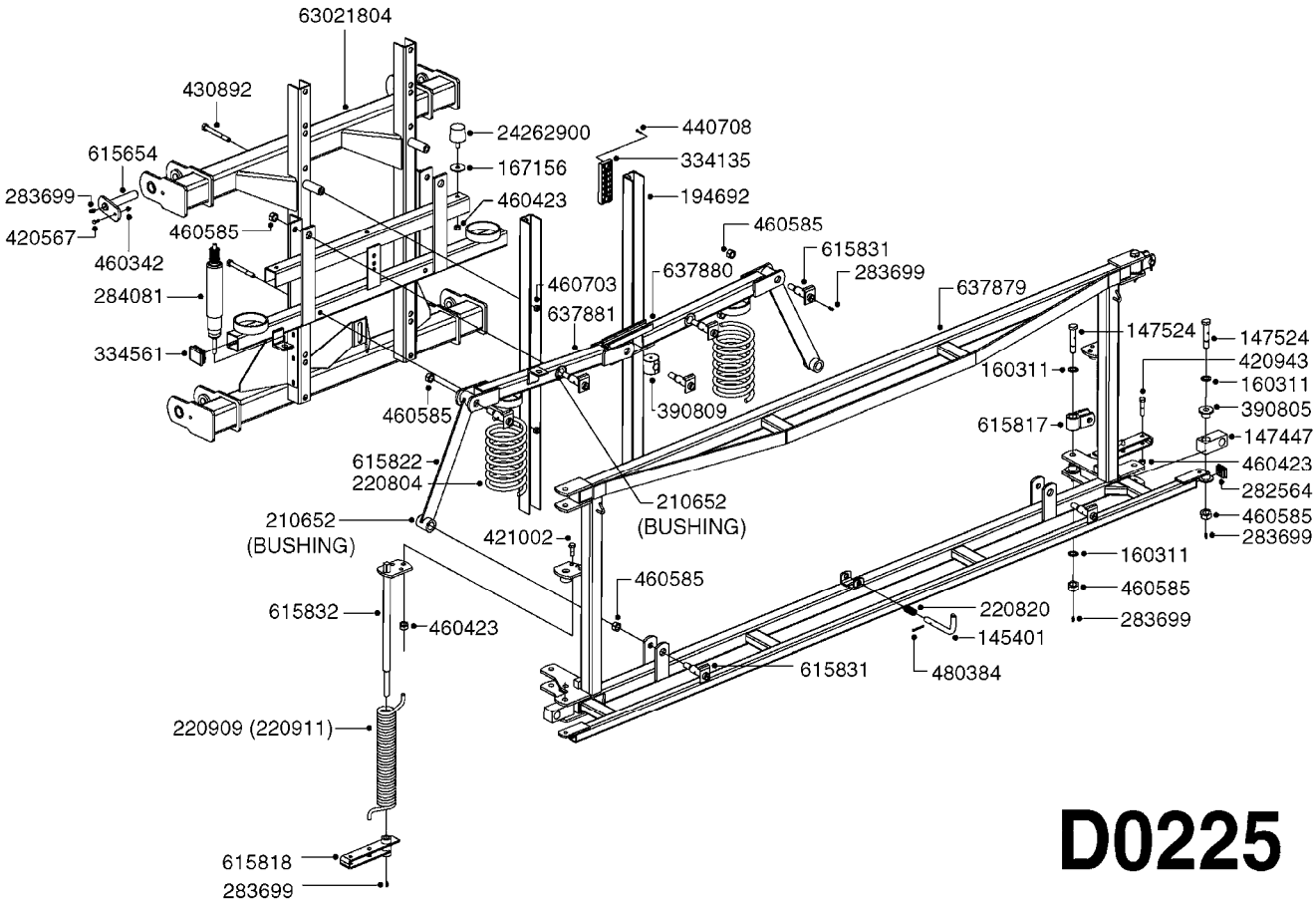

D0225

Agroparts: www.HARDI-INTERNATIONAL.com

BOOM FALCON PARALIFT CENTER
D0225-HIN, 01:04:19

Date 12.08.2020 11:37

parts-n°	order qty	description
145401	1	PAWL
147447	1	PIVOT BLOCK INNER WING SPL
147524	1	PIN F. PIVOT SPL
160311	1	WASHER D30/D20.4X2
167156	1	WASHER D46.5/D12.4X2.5
194692	1	U-CHANNEL SPL CENTER
210652	1	BUSHING TEFLON D25/D22X20
220804	1	SPRING 130/12/320 EAGLE 45'
220820	1	SPRING D20.5/2.0 0-50MM
220909	1	SPRING F. BREAKAWAY R.H. SPL
220911	1	SPRING F. BREAKAWAY L.H. SPL
282564	1	PLUG 35MM SQ.BLACK
283699	1	GREASE NIPPLE M6X1
284081	1	SHOCK ABSORBER 150 1121
334135	1	SLIDE SHOE 140X45X15
334561	1	PLUG 50x50x2 F.SQ.TUBE
390805	1	BUSHING F. PIVOT SPL
390809	1	SPACER 50X48 D22/D8 POLY
420567	1	BOLT HEX 8.8 DEL M8X30 FT
420943	1	BOLT HEX 8.8 DEL M10X50
421002	1	BOLT HEX 8.8 DEL M10X30 FT DIN933
430892	1	BOLT HEX 8.8 DEL M12X110
440708	1	SCREW M5.5X16 SELF TAPPING SS
460342	1	NUT HEX M10 DEL DIN934
460423	1	NUT HEX M10X1.50 LOCK DIN985A2 SS
460585	1	LOCKING NUT M16 DIN985 A2 SS
460703	1	NUT HEX M12X1.75 LOCK DIN985A2 SS
480384	1	PIN COTTER 3/16 x 1-1/2"
615654	1	PIN D25 X 123 F. PARALIFT
615817	1	FORK F.CYLINDER SPL
615818	1	BREAKAWAY LEVER SPL
615822	1	TRAPEZE ARM FALCON
615831	1	PIN F. CENTER SECTION SPL
615832	1	PIN F. BREAKAWAY SPRING SPL
637879	1	CENTER FRAME SPL
637880	1	SUSPENSION ARM R.H. SPL
637881	1	SUSPENSION ARM L.H. SPL
24262900	1	RUBBER STOP D50X40 M10X33
63021804	1	LIFT CENTER SPL PARA-LIFT

BOOM FALCON WINGS 42',45',50'
D0230-HIN, 01:01:16

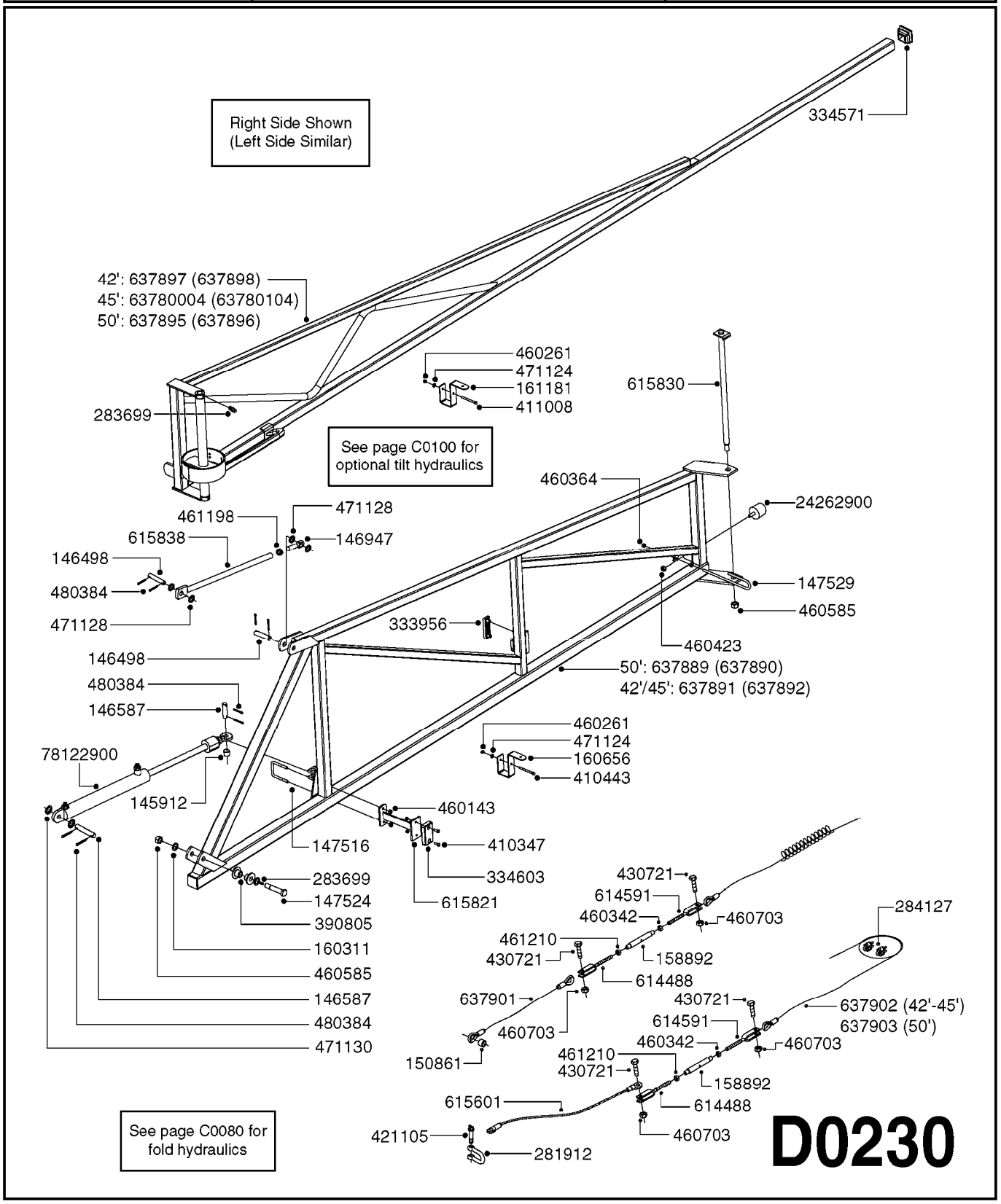

Agroparts: www.HARDI-INTERNATIONAL.com

BOOM FALCON WINGS 42',45',50'
D0230-HIN, 01:01:16

Date 12.08.2020 11:37

parts-n°	order qty	description
145912	1	BUSHING D19.8/D17.0X7MM
146498	1	PIN D16.8 X 75
146587	1	PIN D16.8 X 65
146947	1	LINK EYE F. SUB TILT SPL
147516	1	U-BOLT M8-50x50
147524	1	PIN F. PIVOT SPL
147529	1	CABLE SUPPORT BKT.
150861	1	BUSHING D16/D13X14
158892	1	TURN BUCKLE HOUS
160311	1	WASHER D30/D20.4X2
160656	1	CLAMP NOZZLE TUBE 50X50
161181	1	NOZZLE CLAMP 40 x 40 SPL OUTER
281912	1	SHACKLE M-10
283699	1	GREASE NIPPLE M6X1
284127	1	U-CLAMP F.CABLE 6MM NUTS
333956	1	SLIDE SHOE 91X25X10
334571	1	PLUG 40x40x2 F.SQ.TUBE
334603	1	RUBBER STOP 86X48X15
390805	1	BUSHING F. PIVOT SPL
410347	1	SCREW M6X20 8.8
410443	1	BOLT HEX 8.8 DEL M6X70
411008	1	BOLT HEX 8.8 DEL M6X55
421105	1	M10X45 MACHINE SCREW STAINLESS
430721	1	BOLT HEX 8.8 DEL M12X40 FT
460143	1	LOCK NUT M8 SST A2 DIN985
460261	1	NUT HEX M6X1.00 LOCK DIN985 A2 SS
460342	1	NUT HEX M10 DEL DIN934
460364	1	NUT HU M8 A2 SS DIN934
460423	1	NUT HEX M10X1.50 LOCK DIN985A2 SS
460585	1	LOCKING NUT M16 DIN985 A2 SS
460703	1	NUT HEX M12X1.75 LOCK DIN985A2 SS
461198	1	NUT HEX M16X2 JAMB
461210	1	NUT HEX M10X1.5 L.THREAD A4
471124	1	WASHER, M6, Ø18/ 6.4X 1.6, SS
471128	1	WASHER, M16, Ø30/17.0X 3.0, SS
471130	1	WASHER, M24, Ø44/25.0X 4.0, SS
480384	1	PIN COTTER 3/16 x 1-1/2"
614488	1	FORK/ R.THREAD 10mmX144mm
614591	1	FORK /L.THREAD
615601	1	BUNGEE CORD 21-1/4"
615821	1	BOOM STOP SPL
615830	1	PIN F. OUTER WING SPL
615838	1	TILT ROD FALCON BOOM
637889	1	WING INNER 50' SPL R.H.
637890	1	WING INNER 50' SPL L.H.
637891	1	WING INNER 42'-45' SPL R.H.
637892	1	WING INNER 42'-45' SPL L.H.
637895	1	WING OUTER 50' SPL R.H.
637896	1	WING OUTER 50' SPL L.H.
637897	1	WING OUTER 42' SPL R.H.
637898	1	WING OUTER 42' SPL L.H.
637901	1	CABLE 750mm SPL
637902	1	CABLE 42'-45' l=4300MM SPL
637903	1	CABLE 50' l=5300MM SPL
24262900	1	RUBBER STOP D50X40 M10X33
63780004	1	WING OUTER 45' SPL R.H.
63780104	1	WING OUTER 45' SPL L.H.
78122900	1	CYLINDER 40/22X300MM RED

	Agroparts: www.HARDI-INTERNATIONAL.com	
HARDI	TRANSP.BRACKETS-FALCON NEW NAV D0240-HIN, 01:01:16	Page 0 Date 12.08.2020 11:37

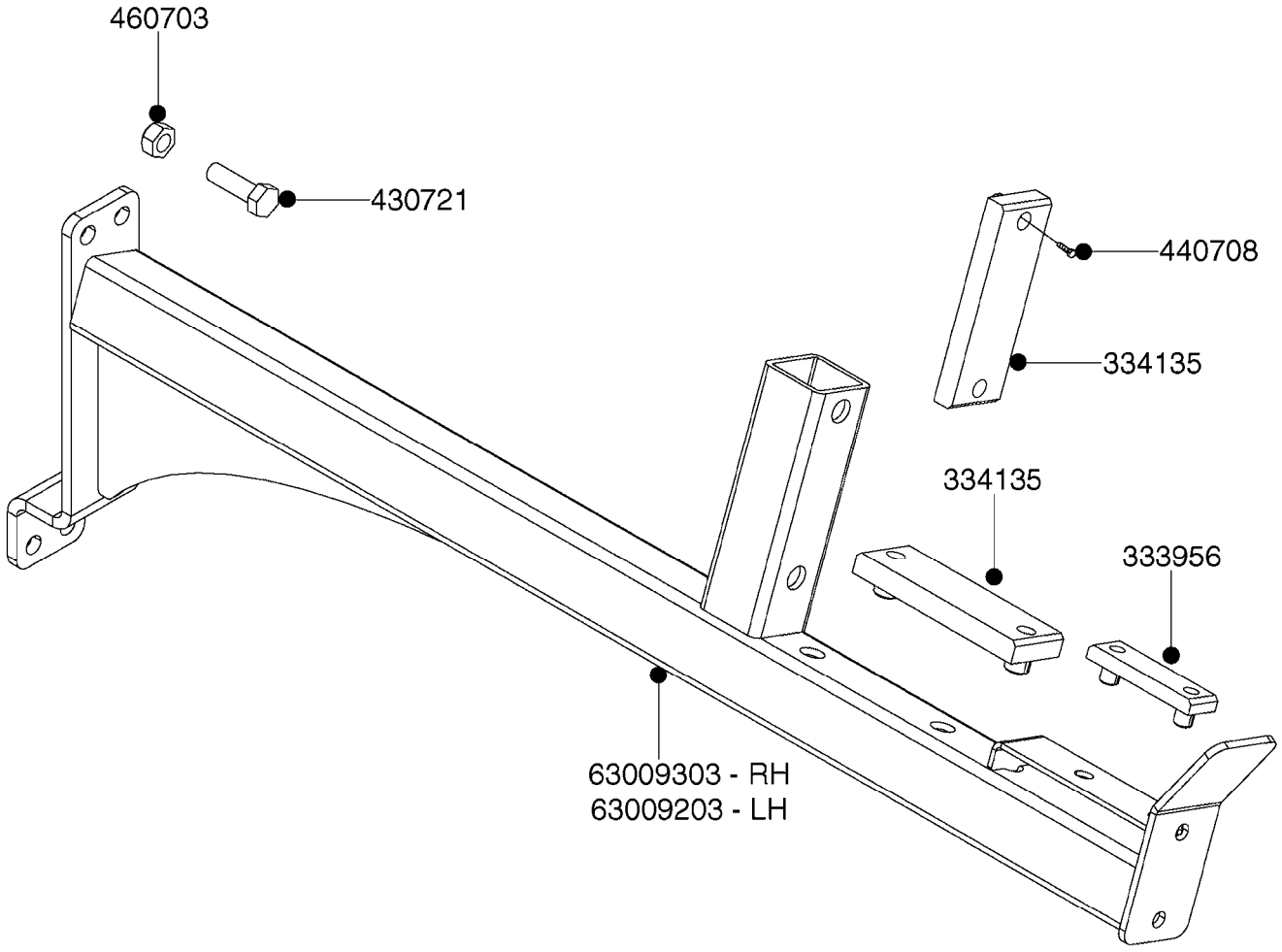

D0240

Agroparts: www.HARDI-INTERNATIONAL.com

TRANSP.BRACKETS-FALCON NEW NAV
D0240-HIN, 01:01:16

Date 12.08.2020 11:37

parts-n°	order qty	description
333956	1	SLIDE SHOE 91X25X10
334135	1	SLIDE SHOE 140X45X15
430721	1	BOLT HEX 8.8 DEL M12X40 FT
440708	1	SCREW M5.5X16 SELF TAPPING SS
460703	1	NUT HEX M12X1.75 LOCK DIN985A2 SS
63009203	1	TRANSPORT BKT FALCON LH
63009303	1	TRANSPORT BKT FALCON RH

	Agroparts: www.HARDI-INTERNATIONAL.com	
HARDI	PASTURE BOOM DUAL NOZZLE BRACKET D0250-HIN, 01:01:16	Page 0 Date 12.08.2020 11:37

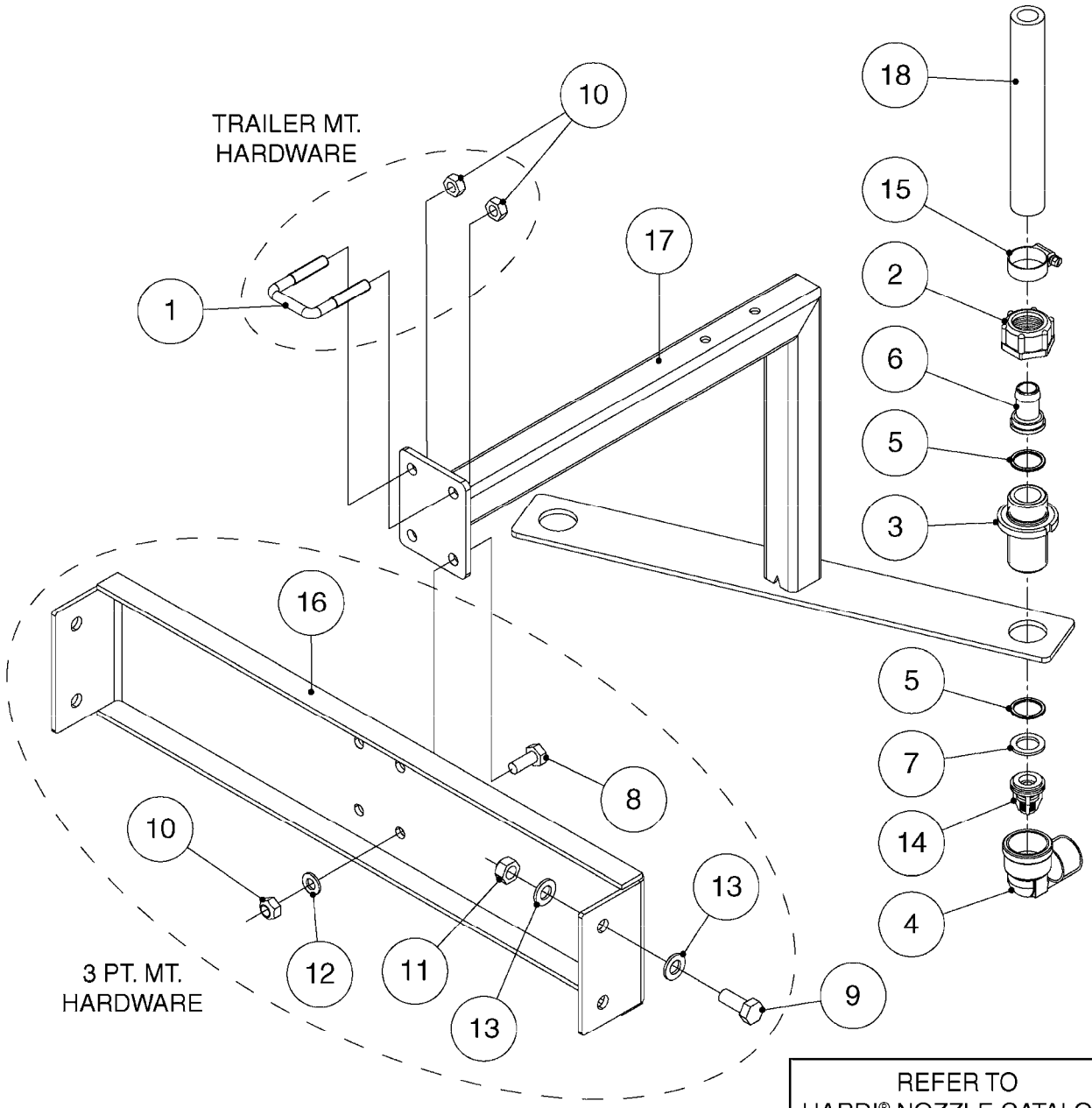

D0250

REFER TO
HARDI® NOZZLE CATALOG
FOR GIANT END NOZZLES

Agroparts: www.HARDI-INTERNATIONAL.com

PASTURE BOOM DUAL NOZZLE BRACKET
D0250-HIN, 01:01:16

Date 12.08.2020 11:37

Pos.	parts-n°	order qty	description
1	143161	1	BOLT U M10 40X40
2	320095	1	FITT.DK NUT 1" BSP
3	320456	1	FITT.DK BULKHEAD 1"BSP DOUBLE
4	322138	1	FITT.DK ELB 1"M X 1"F BSP
5	330326	1	O-RING D30/D24X2 F.1"NUT
6	330665	1	FITT.DK HB 3/4"F.1" NUT
7	331483	1	WASHER RY-2
8	420604	1	BOLT HEX 8.8 DEL M10X25 FT DIN933
9	430286	1	BOLT HEX 8.8 DEL M12X30 FT
10	460423	1	NUT HEX M10X1.50 LOCK DIN985A2 SS
11	460703	1	NUT HEX M12X1.75 LOCK DIN985A2 SS
12	471122	1	WASHER, M10, Ø20/10.5X 2.0, SS
13	471127	1	WASHER, M12, Ø24/13X24X2.5 SS
14	724144	1	VALVE F/BIII X/L, 29mmx35mm
15	28029903	1	CLAMP HOSE GEAR P3/4"-S1" 6712
16	61006603	1	BOOM SUPPORT BRACKET PS105/155
17	63015303	1	NZL.BRKT.F.PASTURE SPRAYER
18	92703203	1	HOSE R X3/4" X300PSI WP X0012"

	Agroparts: www.HARDI-INTERNATIONAL.com	
HARDI	PASTURE BOOM SINGLE NOZZLE BRACKET D0255-HIN, 11:12:19	Page 0 Date 12.08.2020 11:37

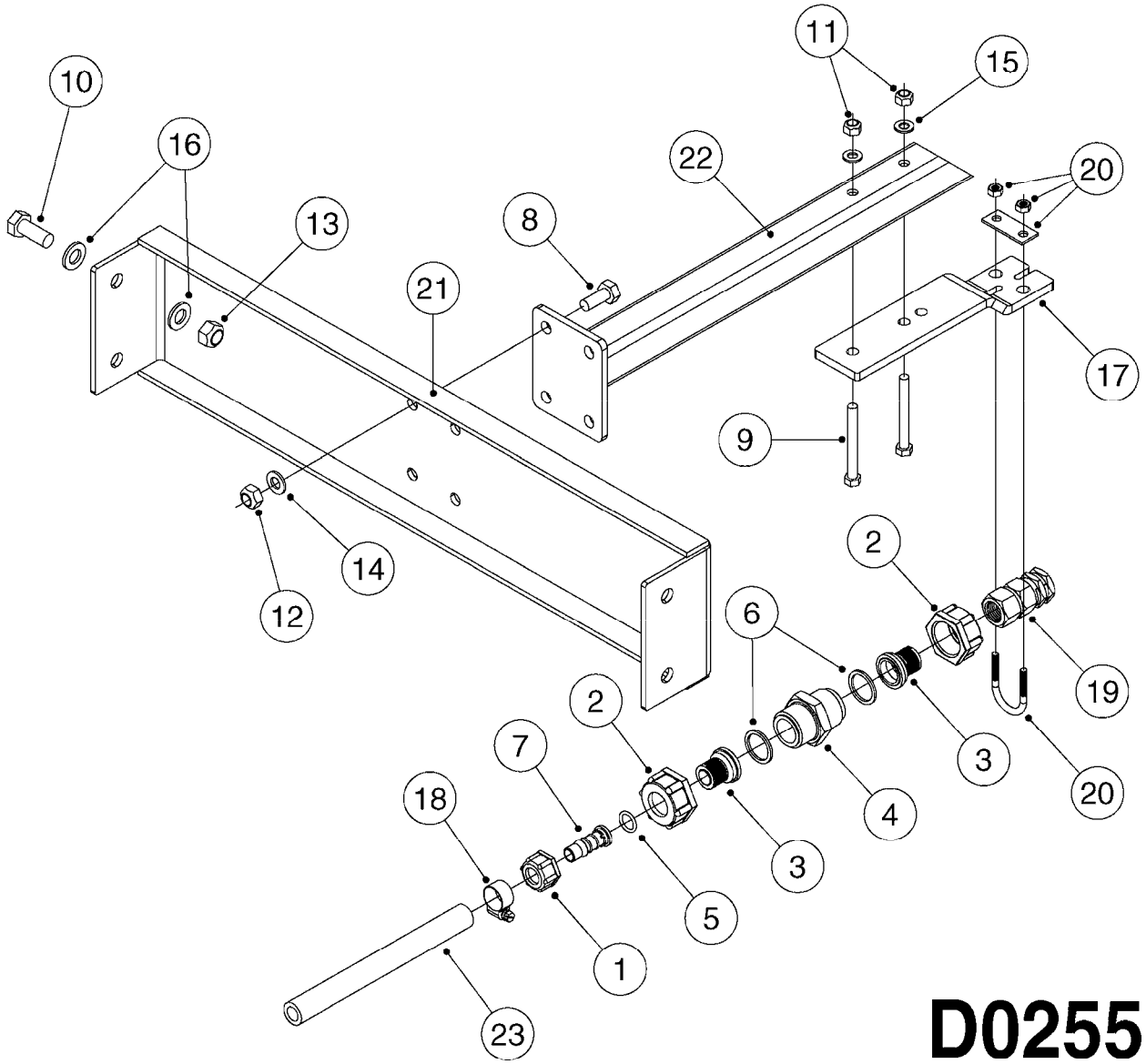

Agroparts: www.HARDI-INTERNATIONAL.com

PASTURE BOOM SINGLE NOZZLE BRACKET
D0255-HIN, 11:12:19

Date 12.08.2020 11:37

Pos.	parts-nº	order qty	description
1	320084	1	FITT.DK NUT 1/2" BSP
2	320095	1	FITT.DK NUT 1" BSP
3	320117	1	FITT.DK CONN.1/2"BSP F. 1" CAP
4	320132	1	FITT.DK HN 1" BSP
5	330212	1	O-RING D19/D14X2.4 F.1/2"NUT
6	330326	1	O-RING D30/D24X2 F.1"NUT
7	330687	1	FITT.DK HB 1/2" F. 1/2" NUT
8	420604	1	BOLT HEX 8.8 DEL M10X25 FT DIN933
9	421201	1	BOLT HEX 8.8 DEL M8X70
10	430286	1	BOLT HEX 8.8 DEL M12X30 FT
11	460143	1	LOCK NUT M8 SST A2 DIN985
12	460423	1	NUT HEX M10X1.50 LOCK DIN985A2 SS
13	460703	1	NUT HEX M12X1.75 LOCK DIN985A2 SS
14	471122	1	WASHER, M10, Ø20/10.5X 2.0, SS
15	471126	1	WASHER, M8, Ø16/ 8.4X 1.6, SS
16	471127	1	WASHER, M12, Ø24/13X24X2.5 SS
17	16111303	1	PLATE 5/16" X 2 L=230
18	28029803	1	CLAMP HOSE GEAR P1/2" 6708
19	28046703	1	NOZZLE HAMILTON BOOMLESS #10
20	28046803	1	U-Bolt W/Plate, 1/4"-20 X 1"
21	61006603	1	BOOM SUPPORT BRACKET PS105/155
21	61009103	1	BOOM SUPPORT BRACKET PS210
22	61025403	1	HAMILTON NOZ SUPPORT BRKT, PASTURE SPRAYER
23	92702103	1	HOSE R X1/2" X300PSI WP X0012"

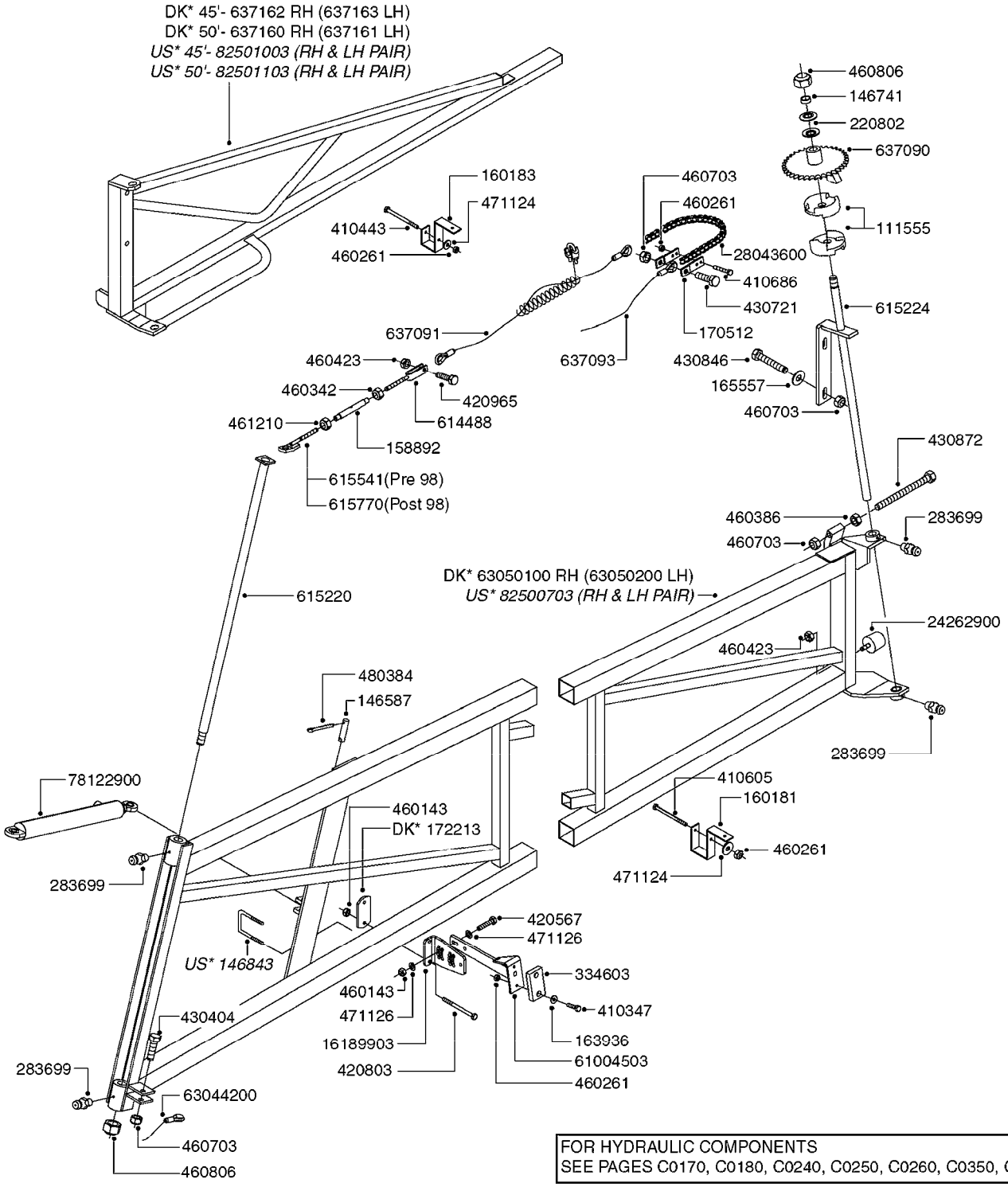

FOR HYDRAULIC COMPONENTS
SEE PAGES C0170, C0180, C0240, C0250, C0260, C0350, C0360

D0260

DK* = DENMARK STEEL PARTS

US* = NORTH AMERICAN STEEL PARTS

Agroparts: www.HARDI-INTERNATIONAL.com

BOOM EAGLE WINGS 45' 50'
D0260-HIN, 01:01:16

Date 12.08.2020 11:37

parts-n°	order qty	description
111555	1	BREAKAWAY CLUTCH EG.(23MM)
146587	1	PIN D16.8 X 65
146741	1	BUSHING D28/D22.2X10
146843	1	BOLT U M8 F.60 x 60
158892	1	TURN BUCKLE HOUS
160181	1	CLAMP NOZZLE TUBE 60X60
160183	1	CLAMP NOZZLE TUBE 50X30
163936	1	WASHER D15/D6.2X1
165557	1	WASHER D28.0/D12.2X2.0 SS
170512	1	ASSEMBLY BRACKET FOR CHAIN
172213	1	FLAT BAR F.BOOM STRAP
220802	1	BELLVILLE WASHER D50/D22.4X2
283699	1	GREASE NIPPLE M6X1
334603	1	RUBBER STOP 86X48X15
410347	1	SCREW M6X20 8.8
410443	1	BOLT HEX 8.8 DEL M6X70
410605	1	BOLT HEX 8.8 DEL M6X80
410686	1	BOLT HEX 8.8 DEL M6X30
420567	1	BOLT HEX 8.8 DEL M8X30 FT
420803	1	BOLT HEX 8.8 DEL M8X90
420965	1	M10X40 MACHINE SCREW STAINLESS
430404	1	BOLT HEX 8.8 DEL M12X50
430721	1	BOLT HEX 8.8 DEL M12X40 FT
430846	1	BOLT HEX 8.8 DEL M12X80
430872	1	BOLT HEX 8.8 DEL M12X100 FT
460143	1	LOCK NUT M8 SST A2 DIN985
460261	1	NUT HEX M6X1.00 LOCK DIN985 A2 SS
460342	1	NUT HEX M10 DEL DIN934
460386	1	NUT HEX M12X1.75
460423	1	NUT HEX M10X1.50 LOCK DIN985A2 SS
460703	1	NUT HEX M12X1.75 LOCK DIN985A2 SS
460806	1	NUT HEX M20X2.50 LOCK DIN985A2 SS
461210	1	NUT HEX M10X1.5 L.THREAD A4
471124	1	WASHER, M6, Ø18/ 6.4X 1.6, SS
471126	1	WASHER, M8, Ø16/ 8.4X 1.6, SS
480384	1	PIN COTTER 3/16 x 1-1/2"
614488	1	FORK/ R.THREAD 10mmX144mm
615220	1	PIN 25 X 910 FOR EAGLE
615224	1	BREAKAWAY SHAFT EAGLE
615541	1	ANCHOR PART TURNBUCKLE EAGLE
615770	1	ANCHOR F.EAGLE CABLE
637090	1	SPROCKET EAGLE
637091	1	CABLE FRONT EAGLE D7X2895
637093	1	CABLE REAR 5 X 3100MM EAGLE
637160	1	BOOM WING 50'OUTER R.EAGLE
637161	1	BOOM WING 50'OUTER L.EAGLE
637162	1	BOOM WING 45'OUTER R. EAGLE
637163	1	BOOM WING 45'OUTER LEFT EAGLE
16189903	1	PLATE F, EAGLE STOPARM
24262900	1	RUBBER STOP D50X40 M10X33
28043600	1	CHAIN 5/8X810MM (51 LINKS)
61004503	1	BOOM STOP SPB/SPC
63044200	1	CABLE CENTER EAG. 7mm x 1390mm
63050100	1	WING INNER SPB R.H. 05
63050200	1	WING INNER SPB L.H. 05
78122900	1	CYLINDER 40/22X300MM RED
82500703	1	WING INNER SET FPS SPB 45-66'
82501003	1	WING OUTER SET FPS 45' SPB
82501103	1	WING OUTER SET FPS 50' SPB

BOOM EAGLE WINGS 60' 66'
D0270-HIN, 01:01:16

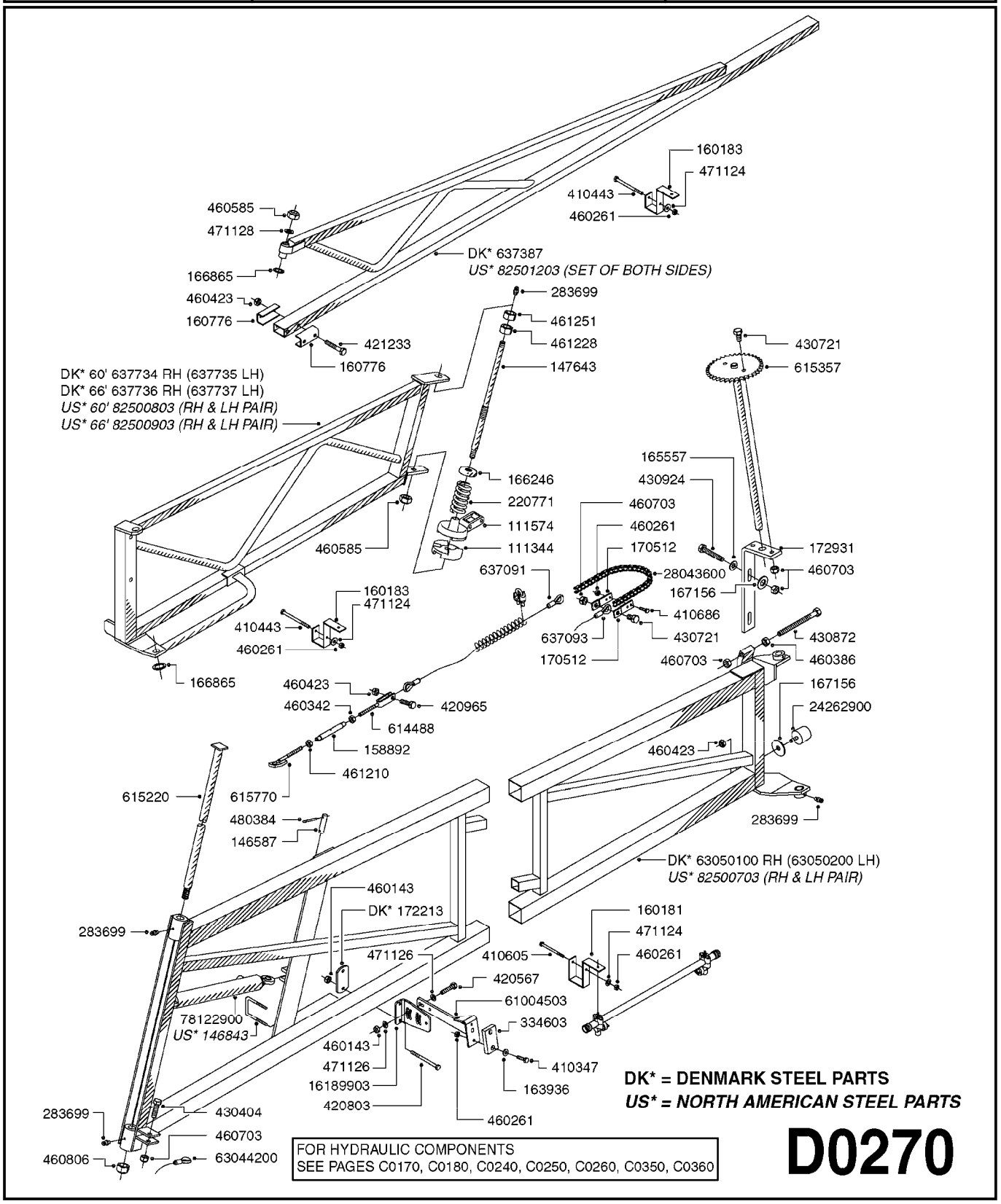

FOR HYDRAULIC COMPONENTS
SEE PAGES C0170, C0180, C0240, C0250, C0260, C0350, C0360

DK* = DENMARK STEEL PARTS
US* = NORTH AMERICAN STEEL PARTS

D0270

HARDI	**Agroparts: www.HARDI-INTERNATIONAL.com**	
	BOOM EAGLE WINGS 60' 66' D0270-HIN, 01:01:16	Page 1 Date 12.08.2020 11:37

parts-n°	order qty	description
111344	1	CLAW CLUTCH Ø100/Ø20,5 UNDER PART RED
111574	1	CLAW CLUTCH D100 UP.(MACH)
146587	1	PIN D16.8 X 65
146843	1	BOLT U M8 F.60 x 60
147643	1	AXLE F.BM BRKWY. W. ZERT L=426
158892	1	TURN BUCKLE HOUS
160181	1	CLAMP NOZZLE TUBE 60X60
160183	1	CLAMP NOZZLE TUBE 50X30
160776	1	U-CHANNEL F.3PT.
163936	1	WASHER D15/D6.2X1
165557	1	WASHER D28.0/D12.2X2.0 SS
166246	1	WASHER CUP D53 F.SPRING
166865	1	WASHER D35/D25X2
167156	1	WASHER D46.5/D12.4X2.5
170512	1	ASSEMBLY BRACKET FOR CHAIN
172213	1	FLAT BAR F.BOOM STRAP
172931	1	FLAT STEEL 15X50
220771	1	SPRING D53/D43X100
283699	1	GREASE NIPPLE M6X1
334603	1	RUBBER STOP 86X48X15
410347	1	SCREW M6X20 8.8
410443	1	BOLT HEX 8.8 DEL M6X70
410605	1	BOLT HEX 8.8 DEL M6X80
410686	1	BOLT HEX 8.8 DEL M6X30
420567	1	BOLT HEX 8.8 DEL M8X30 FT
420803	1	BOLT HEX 8.8 DEL M8X90
420965	1	M10X40 MACHINE SCREW STAINLESS
421233	1	BOLT HEX 8.8 10.9 DEL M10X70
430404	1	BOLT HEX 8.8 DEL M12X50
430721	1	BOLT HEX 8.8 DEL M12X40 FT
430872	1	BOLT HEX 8.8 DEL M12X100 FT
430924	1	BOLT HEX 8.8 DEL M12 X 85
460143	1	LOCK NUT M8 SST A2 DIN985
460261	1	NUT HEX M6X1.00 LOCK DIN985 A2 SS
460342	1	NUT HEX M10 DEL DIN934
460386	1	NUT HEX M12X1.75
460423	1	NUT HEX M10X1.50 LOCK DIN985A2 SS
460585	1	LOCKING NUT M16 DIN985 A2 SS
460703	1	NUT HEX M12X1.75 LOCK DIN985A2 SS
460806	1	NUT HEX M20X2.50 LOCK DIN985A2 SS
461210	1	NUT HEX M10X1.5 L.THREAD A4
461228	1	NUT HEX M20
461251	1	NUT HEX M20 X 2.5 JAMB
471124	1	WASHER, M6, Ø18/ 6.4X 1.6, SS
471126	1	WASHER, M8, Ø16/ 8.4X 1.6, SS
471128	1	WASHER, M16, Ø30/17.0X 3.0, SS
480384	1	PIN COTTER 3/16 x 1-1/2"
614488	1	FORK/ R.THREAD 10mmX144mm
615220	1	PIN 25 X 910 FOR EAGLE
615357	1	SHAFT W.SPROCKET EAGLE 60'3PT
615770	1	ANCHOR F.EAGLE CABLE
637091	1	CABLE FRONT EAGLE D7X2895
637093	1	CABLE REAR 5 X 3100MM EAGLE
637387	1	BOOM WING BRKWAY E. 60-90'
637734	1	BOOM WING OUT. 60'R.EAG 97
637735	1	BOOM WING OUT. 60'L.EAG 97
637736	1	BOOM WING OUT. 66'R.EAG 97
637737	1	BOOM WING OUT. 66'L.EAG 97
16189903	1	PLATE F, EAGLE STOPARM
24262900	1	RUBBER STOP D50X40 M10X33
28043600	1	CHAIN 5/8X810MM (51 LINKS)

BOOM EAGLE WINGS 60' 66'
D0270-HIN, 01:01:16

Date 12.08.2020 11:37

parts-n°	order qty	description
61004503	1	BOOM STOP SPB/SPC
63044200	1	CABLE CENTER EAG. 7mm x 1390mm
63050100	1	WING INNER SPB R.H. 05
63050200	1	WING INNER SPB L.H. 05
78122900	1	CYLINDER 40/22X300MM RED
82500703	1	WING INNER SET FPS SPB 45-66'
82500803	1	WING OUTER SET FPS 60' SPB
82500903	1	WING OUTER SET FPS 66' SPB
82501203	1	BREAKAWAY SET FPS 60-66' SPB

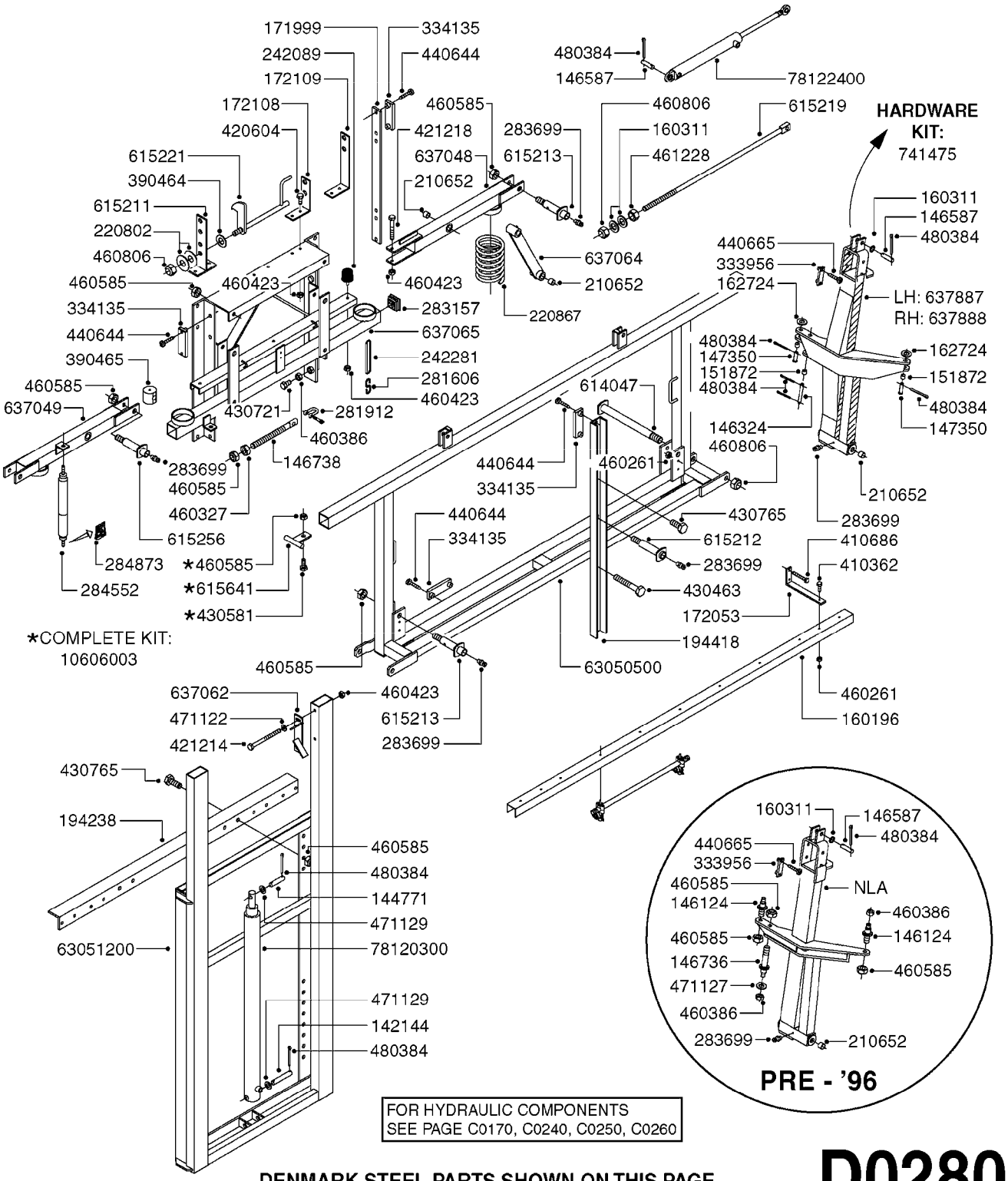

DENMARK STEEL PARTS SHOWN ON THIS PAGE

FOR NORTH AMERICAN STEEL PARTS, SEE PAGE D0290

D0280

Agroparts: www.HARDI-INTERNATIONAL.com

BOOM EAG H-FRAME/CENTER 45-66'
D0280-HIN, 01:01:16

Date 12.08.2020 11:37

parts-n°	order qty	description
142144	1	PIN 20 X 115MM
144771	1	PIN D19.8 X 80
146124	1	ANCHOR PIN CABLE EAGLE
146324	1	SHAFT D16.8 L102/2 X 5
146587	1	PIN D16.8 X 65
146736	1	ANCHOR PIN FOR CYLINDER EAGLE
146738	1	PIN FOR CENTER CABLE EAGLE
147350	1	PIN D16.8 L60MM
151872	1	BUSHING D22.0/18.0 10MM
160196	1	NOZZLE TRACK EAGLE
160311	1	WASHER D30/D20.4X2
162724	1	WASHER D25/D18.1X1
171999	1	FLATBAR
172053	1	NOZZLE TRACK HOLDER
172108	1	HOOKMOUNT SHORT EAGLE
172109	1	HOOKMOUNT LONG EAGLE
194238	1	CROSS BRACE SPB
194418	1	U CHANNEL 65 X 1175 CENTER EAG
210652	1	BUSHING TEFLON D25/D22X20
220802	1	BELLVILLE WASHER D50/D22.4X2
220867	1	COMP SPRING DI106 L320 D14 N9,55
242089	1	RUBBER STOP D50X40 M10
242281	1	RUBBER BAND OVAL 180MM
281606	1	S-HOOK GALVANIZED
281912	1	SHACKLE M-10
283157	1	PLUG F.DRAIN 60X60X4
283699	1	GREASE NIPPLE M6X1
284552	1	SHOCK ABSORBER F.EAGLE BOOM
284873	1	KIT F.SHOCK ABSORBER HDW.EAG.
333956	1	SLIDE SHOE 91X25X10
334135	1	SLIDE SHOE 140X45X15
390464	1	WASHER NYLON 40/21/3
390465	1	JOINER BLOCK TRAPEEZE EAGLE
410362	1	BOLT HEX 8.8 SS M6X20
410686	1	BOLT HEX 8.8 DEL M6X30
420604	1	BOLT HEX 8.8 DEL M10X25 FT DIN933
421214	1	BOLT HEX 8.8 DEL M10X110
421218	1	BOLT HEX 8.8 DEL M10X90
430463	1	BOLT HEX 8.8 DEL M16X110
430581	1	BOLT HEX 8.8 DEL M16X40 FT
430721	1	BOLT HEX 8.8 DEL M12X40 FT
430765	1	BOLT HEX 8.8 DEL M16X55
440644	1	SCREW NO.10 5/8"
440665	1	SCREW M4.2X16 STAINLESS
460261	1	NUT HEX M6X1.00 LOCK DIN985 A2 SS
460327	1	NUT HEX M16X2
460386	1	NUT HEX M12X1.75
460423	1	NUT HEX M10X1.50 LOCK DIN985A2 SS
460585	1	LOCKING NUT M16 DIN985 A2 SS
460806	1	NUT HEX M20X2.50 LOCK DIN985A2 SS
461228	1	NUT HEX M20
471122	1	WASHER, M10, Ø20/10.5X 2.0, SS
471127	1	WASHER, M12, Ø24/13X24X2.5 SS
471129	1	WASHER, M20, Ø37/21.0X 3.0, SS
480384	1	PIN COTTER 3/16 x 1-1/2"
614047	1	PIN D22 X 243 HINGE EAGLE
615211	1	HOOKMOUNT WELDMENT EAGLE
615212	1	PIN D22 X 84 LUBED F.EAGLE
615213	1	PIN D22 X 70 LUBED F.EAGLE
615219	1	TILT CYL.REPLACEMENT EAGLE
615221	1	HOOK WELDMENT EAGLE

BOOM EAG H-FRAME/CENTER 45-66'
D0280-HIN, 01:01:16

Date 12.08.2020 11:37

parts-n°	order qty	description
615256	1	PIN 22 X 70 SHORT THREA. EAGLE
615641	1	SAFETY BAR F.WNG TLT 45-66'
637048	1	SUSP.ARM RIGHT EAGLE
637049	1	SUSP.ARM LEFT EAGLE
637062	1	HOOK GUIDE EAGLE
637064	1	TRAPEEZE ARM EAGLE 45'-66'
637065	1	CENTER PART H FRAME EAGLE
637887	1	HINGE EAGLE LH 45'-66' '97
637888	1	HINGE EAGLE RH 45'-66' '97
741475	1	HINGE HARDWARE KIT,M10+M16 '97
10606003	1	KIT F.TILT STOP 45'-66' EAGLE
63050500	1	CENTER FRAME SPB 05
63051200	1	H-FRAME SPB 05
78120300	1	CYLINDER 60/50/30 1100MM
78122400	1	DOUBLE CYLINDER D 40/20-300

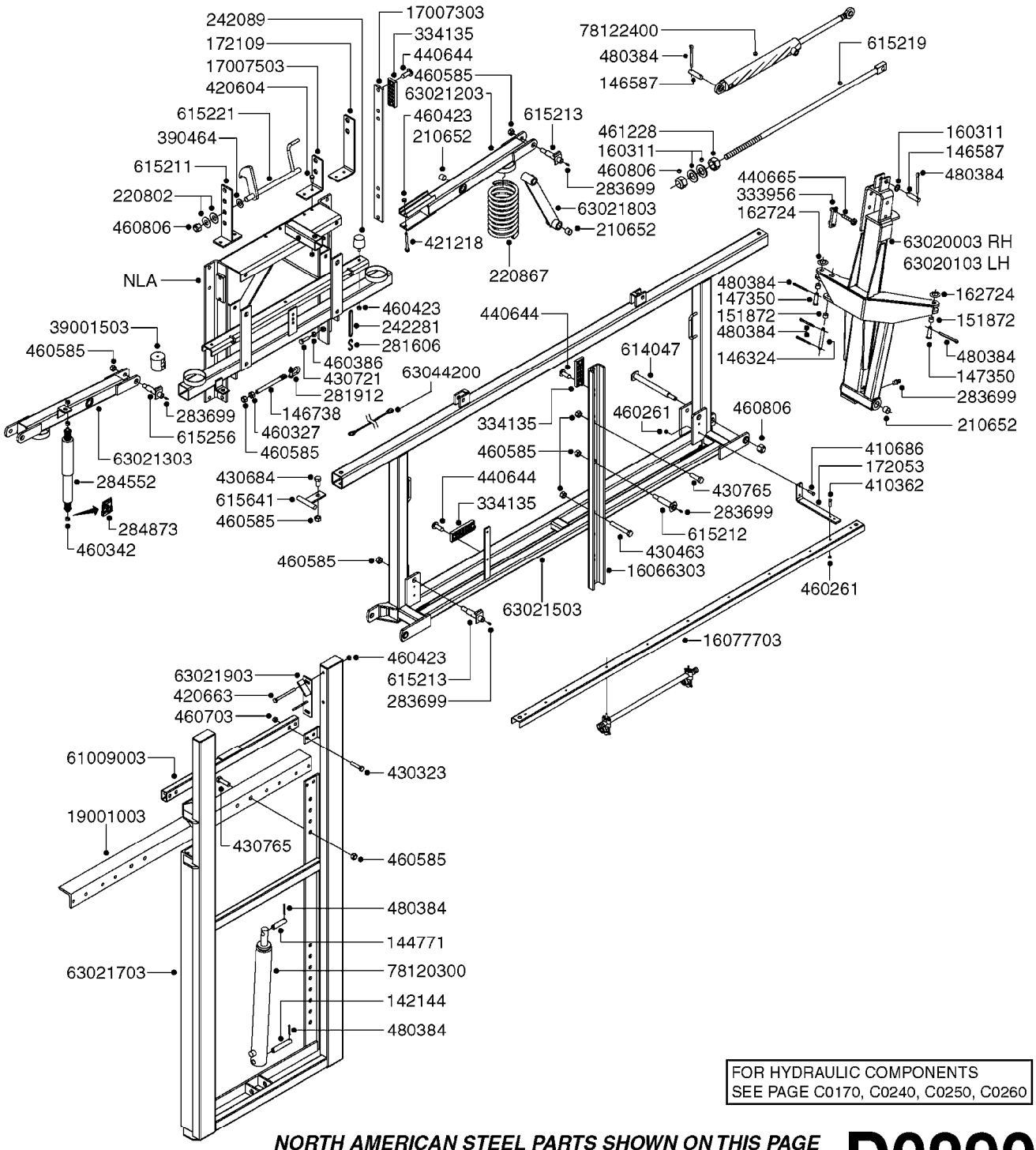

FOR HYDRAULIC COMPONENTS
SEE PAGE C0170, C0240, C0250, C0260

NORTH AMERICAN STEEL PARTS SHOWN ON THIS PAGE

FOR DENMARK STEEL PARTS, SEE PAGE D0280

D0290

Agroparts: www.HARDI-INTERNATIONAL.com

BOOM EAG H-FRAME/CENTER 45-66'
D0290-HIN, 01:01:16

Date 12.08.2020 11:37

parts-n°	order qty	description
142144	1	PIN 20 X 115MM
144771	1	PIN D19.8 X 80
146324	1	SHAFT D16.8 L102/2 X 5
146587	1	PIN D16.8 X 65
146738	1	PIN FOR CENTER CABLE EAGLE
147350	1	PIN D16.8 L60MM
151872	1	BUSHING D22.0/18.0 10MM
160311	1	WASHER D30/D20.4X2
162724	1	WASHER D25/D18.1X1
172053	1	NOZZLE TRACK HOLDER
172109	1	HOOKMOUNT LONG EAGLE
210652	1	BUSHING TEFLON D25/D22X20
220802	1	BELLVILLE WASHER D50/D22.4X2
220867	1	COMP SPRING DI106 L320 D14 N9,55
242089	1	RUBBER STOP D50X40 M10
242281	1	RUBBER BAND OVAL 180MM
281606	1	S-HOOK GALVANIZED
281912	1	SHACKLE M-10
283699	1	GREASE NIPPLE M6X1
284552	1	SHOCK ABSORBER F.EAGLE BOOM
284873	1	KIT F.SHOCK ABSORBER HDW.EAG.
333956	1	SLIDE SHOE 91X25X10
334135	1	SLIDE SHOE 140X45X15
390464	1	WASHER NYLON 40/21/3
410362	1	BOLT HEX 8.8 SS M6X20
410686	1	BOLT HEX 8.8 DEL M6X30
420604	1	BOLT HEX 8.8 DEL M10X25 FT DIN933
420663	1	BOLT HEX 8.8 DEL M10X120 A4-80
421218	1	BOLT HEX 8.8 DEL M10X90
430323	1	BOLT HEX 8.8 DEL M12X60
430463	1	BOLT HEX 8.8 DEL M16X110
430684	1	BOLT HEX 8.8 DEL M16X30 FT
430721	1	BOLT HEX 8.8 DEL M12X40 FT
430765	1	BOLT HEX 8.8 DEL M16X55
440644	1	SCREW NO.10 5/8"
440665	1	SCREW M4.2X16 STAINLESS
460261	1	NUT HEX M6X1.00 LOCK DIN985 A2 SS
460327	1	NUT HEX M16X2
460342	1	NUT HEX M10 DEL DIN934
460386	1	NUT HEX M12X1.75
460423	1	NUT HEX M10X1.50 LOCK DIN985A2 SS
460585	1	LOCKING NUT M16 DIN985 A2 SS
460703	1	NUT HEX M12X1.75 LOCK DIN985A2 SS
460806	1	NUT HEX M20X2.50 LOCK DIN985A2 SS
461228	1	NUT HEX M20
480384	1	PIN COTTER 3/16 x 1-1/2"
614047	1	PIN D22 X 243 HINGE EAGLE
615211	1	HOOKMOUNT WELDMENT EAGLE
615212	1	PIN D22 X 84 LUBED F.EAGLE
615213	1	PIN D22 X 70 LUBED F.EAGLE
615219	1	TILT CYL.REPLACEMENT EAGLE
615221	1	HOOK WELDMENT EAGLE
615256	1	PIN 22 X 70 SHORT THREA. EAGLE
615641	1	SAFETY BAR F.WNG TLT 45-66'
16066303	1	U-CHANNEL F. CENTER SPB
16077703	1	CENTER TRACK SPB
17007303	1	SPACER SPB H-FRAME CENTER
17007503	1	TRANSPORT HOOK MOUNT. SPB
19001003	1	CROSS BAR H-FRAME SPB 194238
39001503	1	TRAPEZE JOINER BLOCK SPB/C NA
61009003	1	TRANS.HOOK CROSS BAR SPB N/A

BOOM EAG H-FRAME/CENTER 45-66'
D0290-HIN, 01:01:16

Date 12.08.2020 11:37

parts-n°	order qty	description
63020003	1	HINGE 45'-66' RH / SPB
63020103	1	HINGE 45'-66' LH / SPB
63021203	1	TRAPEZE ARM R.H. SPB
63021303	1	TRAPEZE ARM L.H. SPB
63021503	1	CENTER FRAME SPB
63021703	1	H-FRAME SPB
63021803	1	TRAPEZE ARM SPB
63021903	1	TRANSPORT HOOK DESIGNATOR
63044200	1	CABLE CENTER EAG. 7mm x 1390mm
78120300	1	CYLINDER 60/50/30 1100MM
78122400	1	DOUBLE CYLINDER D 40/20-300

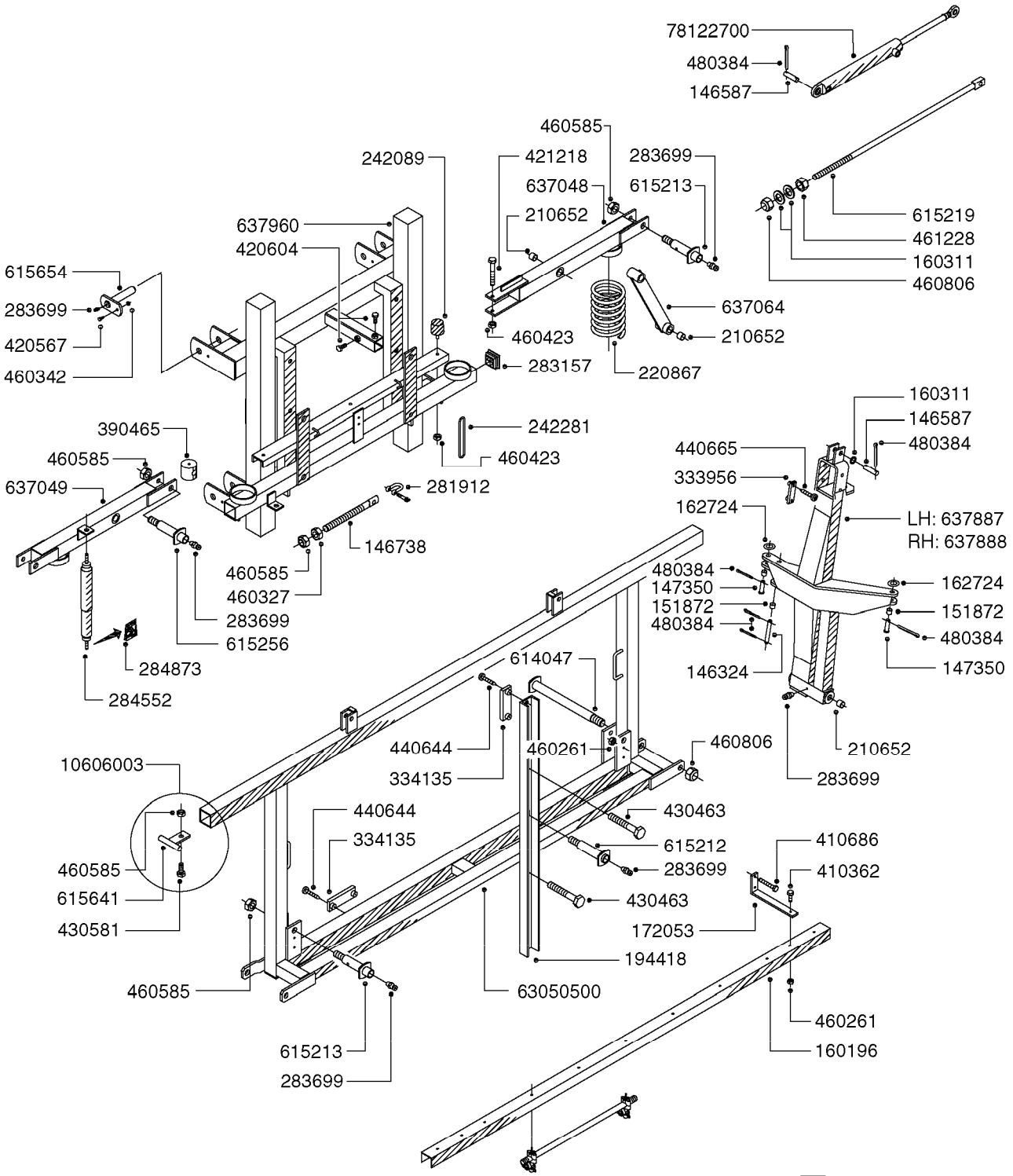

DENMARK STEEL PARTS SHOWN ON THIS PAGE

FOR NORTH AMERICAN STEEL PARTS, SEE PAGE D0310

Agroparts: www.HARDI-INTERNATIONAL.com

BOOM COMMANDER CENTER 45-66'DK
D0300-HIN, 01:01:16

Date 12.08.2020 11:37

parts-n°	order qty	description
146324	1	SHAFT D16.8 L102/2 X 5
146587	1	PIN D16.8 X 65
146738	1	PIN FOR CENTER CABLE EAGLE
147350	1	PIN D16.8 L60MM
151872	1	BUSHING D22.0/18.0 10MM
160196	1	NOZZLE TRACK EAGLE
160311	1	WASHER D30/D20.4X2
162724	1	WASHER D25/D18.1X1
172053	1	NOZZLE TRACK HOLDER
194418	1	U CHANNEL 65 X 1175 CENTER EAG
210652	1	BUSHING TEFLON D25/D22X20
220867	1	COMP SPRING DI106 L320 D14 N9,55
242089	1	RUBBER STOP D50X40 M10
242281	1	RUBBER BAND OVAL 180MM
281912	1	SHACKLE M-10
283157	1	PLUG F.DRAIN 60X60X4
283699	1	GREASE NIPPLE M6X1
284552	1	SHOCK ABSORBER F.EAGLE BOOM
284873	1	KIT F.SHOCK ABSORBER HDW.EAG.
333956	1	SLIDE SHOE 91X25X10
334135	1	SLIDE SHOE 140X45X15
390465	1	JOINER BLOCK TRAPEEZE EAGLE
410362	1	BOLT HEX 8.8 SS M6X20
410686	1	BOLT HEX 8.8 DEL M6X30
420567	1	BOLT HEX 8.8 DEL M8X30 FT
420604	1	BOLT HEX 8.8 DEL M10X25 FT DIN933
421218	1	BOLT HEX 8.8 DEL M10X90
430463	1	BOLT HEX 8.8 DEL M16X110
430581	1	BOLT HEX 8.8 DEL M16X40 FT
440644	1	SCREW NO.10 5/8"
440665	1	SCREW M4.2X16 STAINLESS
460261	1	NUT HEX M6X1.00 LOCK DIN985 A2 SS
460327	1	NUT HEX M16X2
460342	1	NUT HEX M10 DEL DIN934
460423	1	NUT HEX M10X1.50 LOCK DIN985A2 SS
460585	1	LOCKING NUT M16 DIN985 A2 SS
460806	1	NUT HEX M20X2.50 LOCK DIN985A2 SS
461228	1	NUT HEX M20
480384	1	PIN COTTER 3/16 x 1-1/2"
614047	1	PIN D22 X 243 HINGE EAGLE
615212	1	PIN D22 X 84 LUBED F.EAGLE
615213	1	PIN D22 X 70 LUBED F.EAGLE
615219	1	TILT CYL.REPLACEMENT EAGLE
615256	1	PIN 22 X 70 SHORT THREA. EAGLE
615641	1	SAFETY BAR F.WNG TLT 45-66'
615654	1	PIN D25 X 123 F. PARALIFT
637048	1	SUSP.ARM RIGHT EAGLE
637049	1	SUSP.ARM LEFT EAGLE
637064	1	TRAPEEZE ARM EAGLE 45'-66'
637887	1	HINGE EAGLE LH 45'-66' '97
637888	1	HINGE EAGLE RH 45'-66' '97
637960	1	CENTER LIFT FRAME EAG CM45-66'
10606003	1	KIT F.TILT STOP 45'-66' EAGLE
63050500	1	CENTER FRAME SPB 05
78122700	1	CYLINDER D40/22X300MM RED

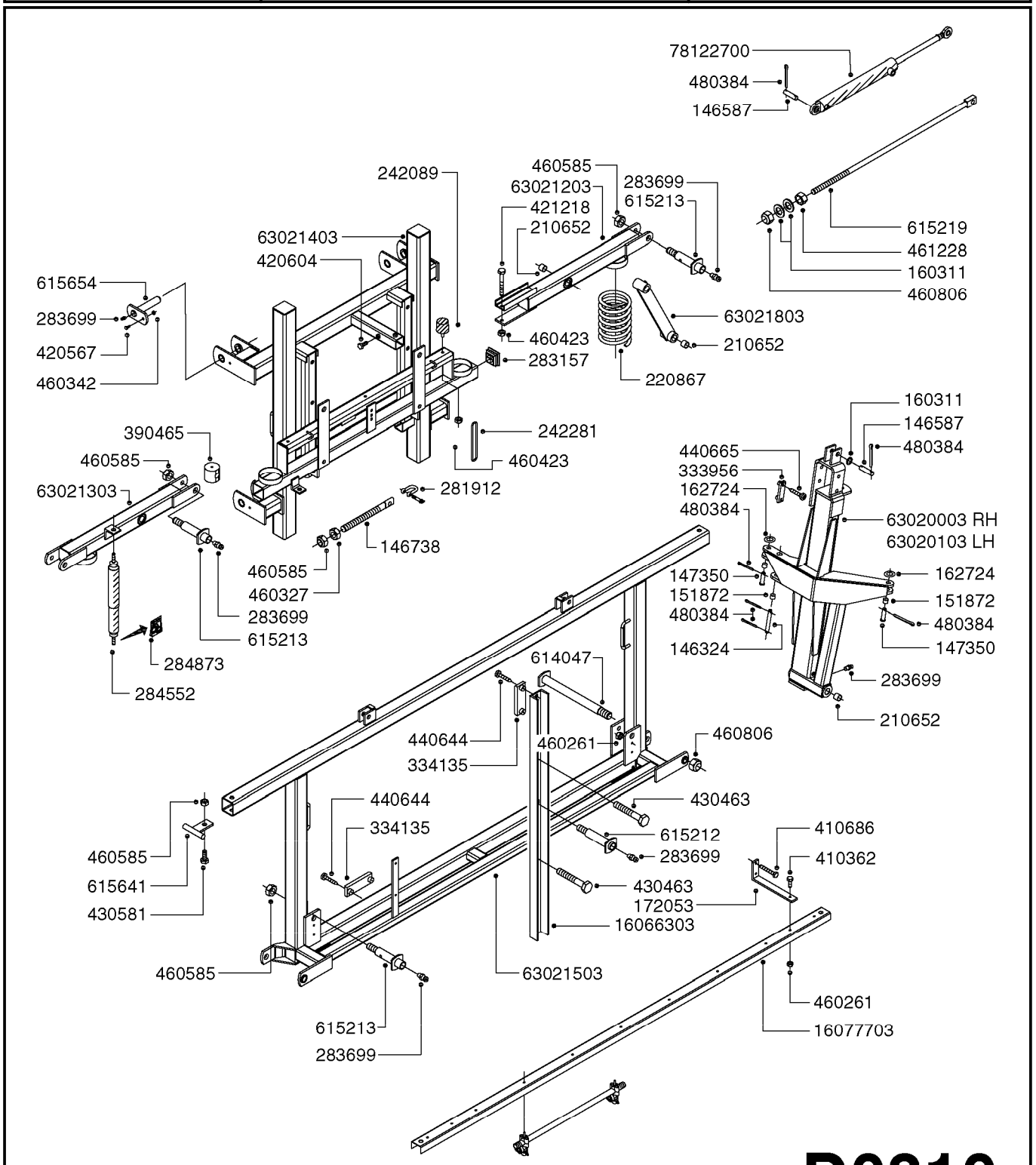

NORTH AMERICAN STEEL PARTS SHOWN ON THIS PAGE

FOR DENMARK STEEL PARTS, SEE PAGE D0300

D0310

Agroparts: www.HARDI-INTERNATIONAL.com

BOOM COMMANDER CENTER 45-66'US
D0310-HIN, 01:01:16

Date 12.08.2020 11:37

parts-n°	order qty	description
146324	1	SHAFT D16.8 L102/2 X 5
146587	1	PIN D16.8 X 65
146738	1	PIN FOR CENTER CABLE EAGLE
147350	1	PIN D16.8 L60MM
151872	1	BUSHING D22.0/18.0 10MM
160311	1	WASHER D30/D20.4X2
162724	1	WASHER D25/D18.1X1
172053	1	NOZZLE TRACK HOLDER
210652	1	BUSHING TEFLON D25/D22X20
220867	1	COMP SPRING DI106 L320 D14 N9,55
242089	1	RUBBER STOP D50X40 M10
242281	1	RUBBER BAND OVAL 180MM
281912	1	SHACKLE M-10
283157	1	PLUG F.DRAIN 60X60X4
283699	1	GREASE NIPPLE M6X1
284552	1	SHOCK ABSORBER F.EAGLE BOOM
284873	1	KIT F.SHOCK ABSORBER HDW.EAG.
333956	1	SLIDE SHOE 91X25X10
334135	1	SLIDE SHOE 140X45X15
390465	1	JOINER BLOCK TRAPEEZE EAGLE
410362	1	BOLT HEX 8.8 SS M6X20
410686	1	BOLT HEX 8.8 DEL M6X30
420567	1	BOLT HEX 8.8 DEL M8X30 FT
420604	1	BOLT HEX 8.8 DEL M10X25 FT DIN933
421218	1	BOLT HEX 8.8 DEL M10X90
430463	1	BOLT HEX 8.8 DEL M16X110
430581	1	BOLT HEX 8.8 DEL M16X40 FT
440644	1	SCREW NO.10 5/8"
440665	1	SCREW M4.2X16 STAINLESS
460261	1	NUT HEX M6X1.00 LOCK DIN985 A2 SS
460327	1	NUT HEX M16X2
460342	1	NUT HEX M10 DEL DIN934
460423	1	NUT HEX M10X1.50 LOCK DIN985A2 SS
460585	1	LOCKING NUT M16 DIN985 A2 SS
460806	1	NUT HEX M20X2.50 LOCK DIN985A2 SS
461228	1	NUT HEX M20
480384	1	PIN COTTER 3/16 x 1-1/2"
614047	1	PIN D22 X 243 HINGE EAGLE
615212	1	PIN D22 X 84 LUBED F.EAGLE
615213	1	PIN D22 X 70 LUBED F.EAGLE
615219	1	TILT CYL.REPLACEMENT EAGLE
615641	1	SAFETY BAR F.WNG TLT 45-66'
615654	1	PIN D25 X 123 F. PARALIFT
16066303	1	U-CHANNEL F. CENTER SPB
16077703	1	CENTER TRACK SPB
63020003	1	HINGE 45'-66' RH / SPB
63020103	1	HINGE 45'-66' LH / SPB
63021203	1	TRAPEZE ARM R.H. SPB
63021303	1	TRAPEZE ARM L.H. SPB
63021403	1	PARA-LIFT LIFT CENTER SPB
63021503	1	CENTER FRAME SPB
63021803	1	TRAPEZE ARM SPB
78122700	1	CYLINDER D40/22X300MM RED

BOOM COMMANDER CENTER 80-90'
D0320-HIN, 15:11:17

Date 12.08.2020 11:37

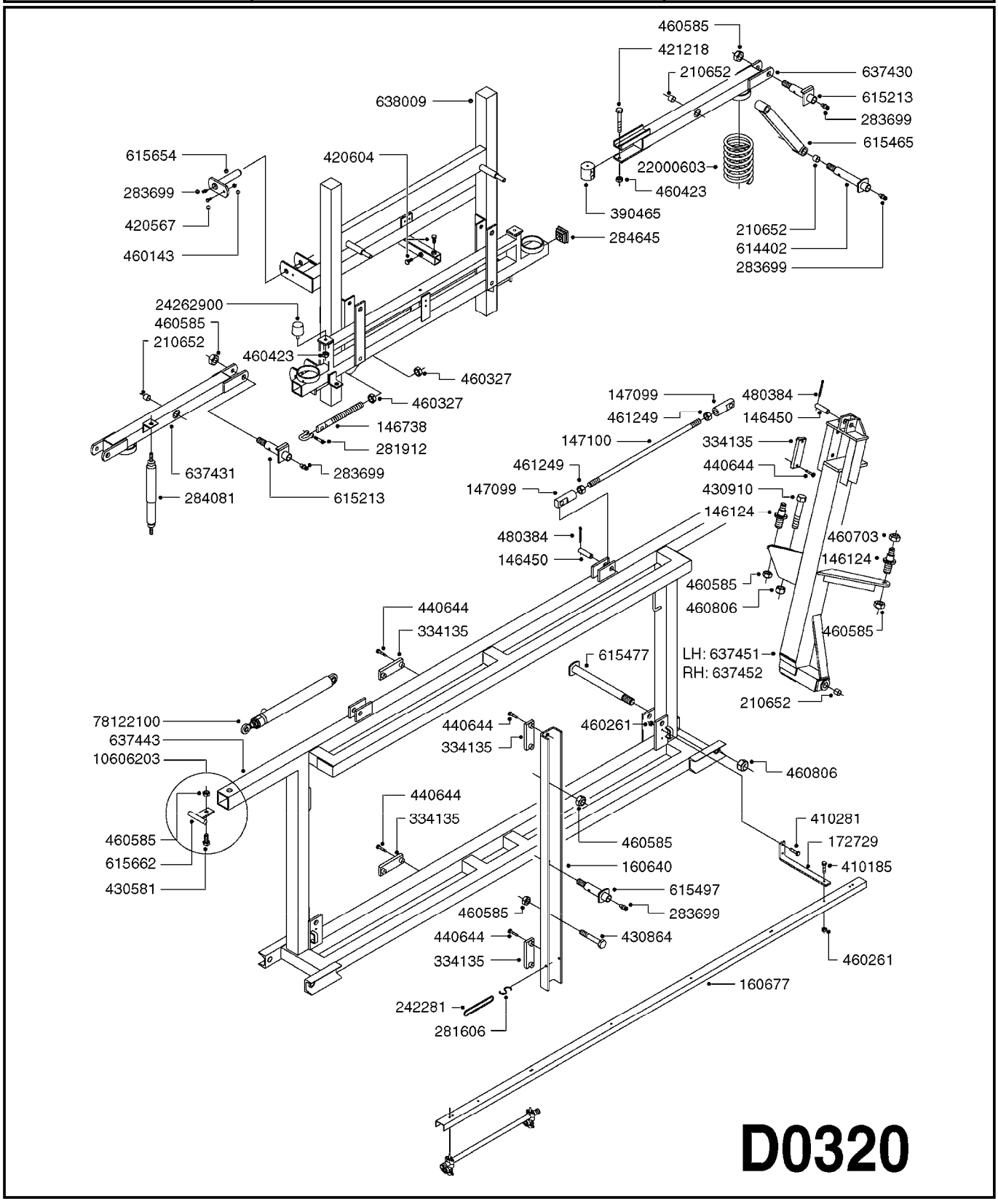

Agroparts: www.HARDI-INTERNATIONAL.com

BOOM COMMANDER CENTER 80-90'
D0320-HIN, 15:11:17

Date 12.08.2020 11:37

parts-n°	order qty	description
146124	1	ANCHOR PIN CABLE EAGLE
146450	1	PIN D19.8 X 75 WITH 2 X D5
146738	1	PIN FOR CENTER CABLE EAGLE
147099	1	CLEVIS F.TILT ARM
147100	1	ROD F.TILT 80/90'
160640	1	U CHANNEL 80/90'
160677	1	NOZZLE TRACK 80/90'
172729	1	BRACKET F.NOZ.TRACK 80/90'
210652	1	BUSHING TEFLON D25/D22X20
242281	1	RUBBER BAND OVAL 180MM
281606	1	S-HOOK GALVANIZED
281912	1	SHACKLE M-10
283699	1	GREASE NIPPLE M6X1
284081	1	SHOCK ABSORBER 150 1121
284645	1	PLUG 60x60x2
334135	1	SLIDE SHOE 140X45X15
390465	1	JOINER BLOCK TRAPEEZE EAGLE
410185	1	BOLT HEX 8.8 DEL M6X16
410281	1	BOLT HEX 8.8 DEL M6X25 DIN933 A2
420567	1	BOLT HEX 8.8 DEL M8X30 FT
420604	1	BOLT HEX 8.8 DEL M10X25 FT DIN933
421218	1	BOLT HEX 8.8 DEL M10X90
430581	1	BOLT HEX 8.8 DEL M16X40 FT
430864	1	BOLT HEX 8.8 DEL M16X120
430910	1	BOLT HEX 8.8 DEL M20X110
440644	1	SCREW NO.10 5/8"
460143	1	LOCK NUT M8 SST A2 DIN985
460261	1	NUT HEX M6X1.00 LOCK DIN985 A2 SS
460327	1	NUT HEX M16X2
460423	1	NUT HEX M10X1.50 LOCK DIN985A2 SS
460585	1	LOCKING NUT M16 DIN985 A2 SS
460703	1	NUT HEX M12X1.75 LOCK DIN985A2 SS
460806	1	NUT HEX M20X2.50 LOCK DIN985A2 SS
461249	1	NUT M22X1.5 DIN439B
480384	1	PIN COTTER 3/16 x 1-1/2"
614402	1	PIN D22 X115 LUBED F.EAGLE 80'
615213	1	PIN D22 X 70 LUBED F.EAGLE
615465	1	TRAPEZE ARM 80/90'
615477	1	PIN F.HINGE 80/90'
615497	1	PIN D22 X 159 LUBED F.EAGLE
615654	1	PIN D25 X 123 F. PARALIFT
615662	1	SAFETY BAR F. TILT 80-90'
637430	1	SUSPENSION ARM RIGHT 80/90'
637431	1	SUSPENSION ARM LEFT 80/90'
637443	1	OUTER FRAME F.CENTER 80'
637451	1	HINGE ASSY.LEFT 80/90'
637452	1	HINGE ASSY.RIGHT 80/90'
638009	1	LIFT FRAME F.CM EAGLE 80'-90'
10606203	1	KIT F. TILT STOP 80'-90' EAGLE
22000603	1	SPRING, COIL, SPC 80-90', RED
24262900	1	RUBBER STOP D50X40 M10X33
78122100	1	CYLINDER DOUBLE D50/25-298

BOOM EAGLE WINGS 3PT 60'
D0330-HIN, 10:01:18

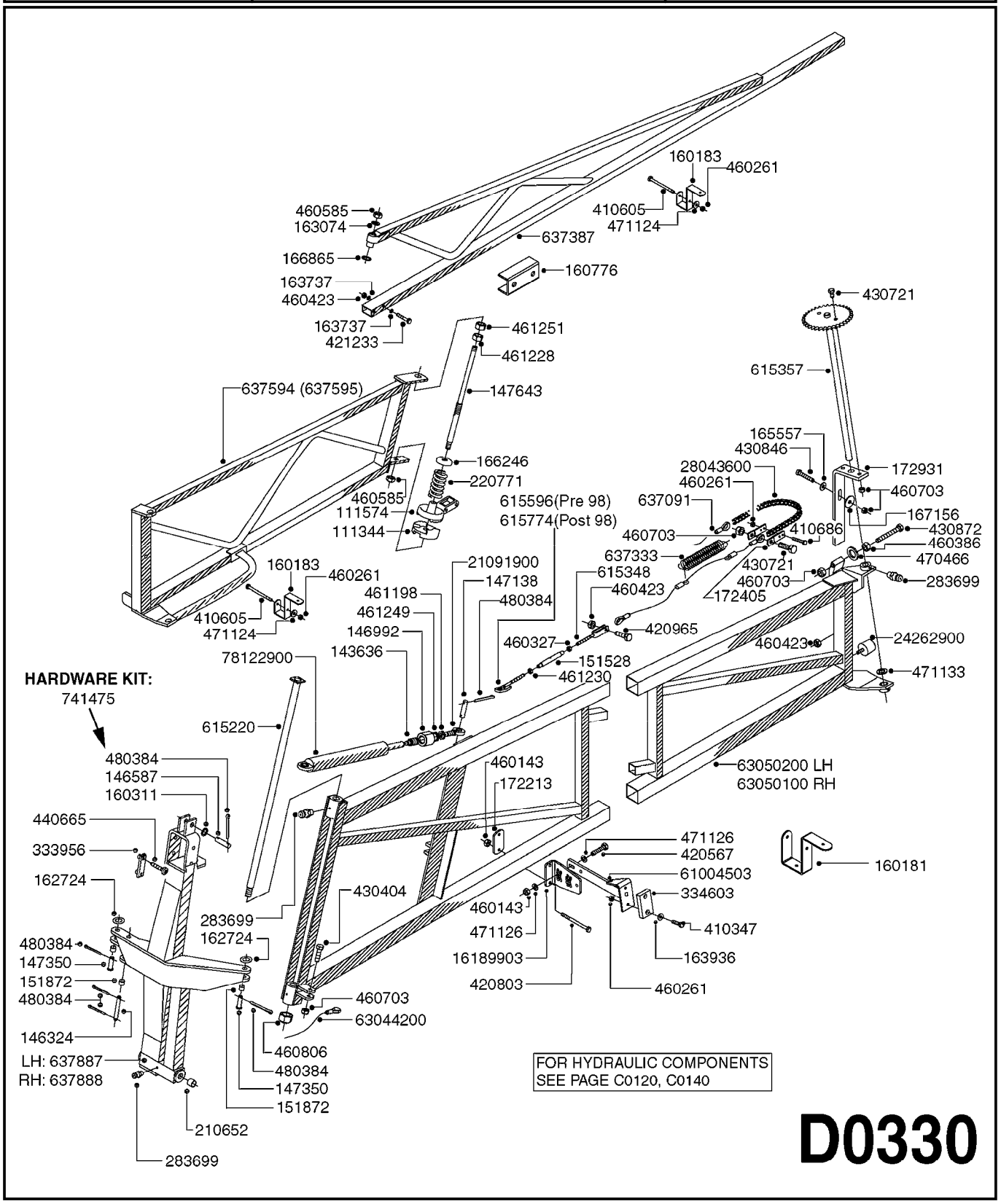

Agroparts: www.HARDI-INTERNATIONAL.com

BOOM EAGLE WINGS 3PT 60'
D0330-HIN, 10:01:18

Date 12.08.2020 11:37

parts-n°	order qty	description
111344	1	CLAW CLUTCH Ø100/Ø20,5 UNDER PART RED
111574	1	CLAW CLUTCH D100 UP.(MACH)
143636	1	THREADED INSERT F.CYLINDER END
146324	1	SHAFT D16.8 L102/2 X 5
146587	1	PIN D16.8 X 65
146992	1	BUSHING F.CYLINDER
147138	1	PIN D16.8 X 90
147350	1	PIN D16.8 L60MM
147643	1	AXLE F.BM BRKWY. W. ZERT L=426
151528	1	TURN BUCKLE HOUSING M16-130
151872	1	BUSHING D22.0/18.0 10MM
160181	1	CLAMP NOZZLE TUBE 60X60
160183	1	CLAMP NOZZLE TUBE 50X30
160311	1	WASHER D30/D20.4X2
160776	1	U-CHANNEL F.3PT.
162724	1	WASHER D25/D18.1X1
163074	1	WASHER D54/D17X3
163737	1	WASHER D15.5/D10.5X1
163936	1	WASHER D15/D6.2X1
165557	1	WASHER D28.0/D12.2X2.0 SS
166246	1	WASHER CUP D53 F.SPRING
166865	1	WASHER D35/D25X2
167156	1	WASHER D46.5/D12.4X2.5
172213	1	FLAT BAR F.BOOM STRAP
172405	1	FLATBAR BRKT.F.CHAIN EAGLE
172931	1	FLAT STEEL 15X50
210652	1	BUSHING TEFLON D25/D22X20
220771	1	SPRING D53/D43X100
283699	1	GREASE NIPPLE M6X1
333956	1	SLIDE SHOE 91X25X10
334603	1	RUBBER STOP 86X48X15
410347	1	SCREW M6X20 8.8
410605	1	BOLT HEX 8.8 DEL M6X80
410686	1	BOLT HEX 8.8 DEL M6X30
420567	1	BOLT HEX 8.8 DEL M8X30 FT
420803	1	BOLT HEX 8.8 DEL M8X90
420965	1	M10X40 MACHINE SCREW STAINLESS
421233	1	BOLT HEX 8.8 10.9 DEL M10X70
430404	1	BOLT HEX 8.8 DEL M12X50
430721	1	BOLT HEX 8.8 DEL M12X40 FT
430846	1	BOLT HEX 8.8 DEL M12X80
430872	1	BOLT HEX 8.8 DEL M12X100 FT
440665	1	SCREW M4.2X16 STAINLESS
460143	1	LOCK NUT M8 SST A2 DIN985
460261	1	NUT HEX M6X1.00 LOCK DIN985 A2 SS
460327	1	NUT HEX M16X2
460386	1	NUT HEX M12X1.75
460423	1	NUT HEX M10X1.50 LOCK DIN985A2 SS
460585	1	LOCKING NUT M16 DIN985 A2 SS
460703	1	NUT HEX M12X1.75 LOCK DIN985A2 SS
460806	1	NUT HEX M20X2.50 LOCK DIN985A2 SS
461198	1	NUT HEX M16X2 JAMB
461228	1	NUT HEX M20
461230	1	NUT HEX M16X2 LH THREAD
461249	1	NUT M22X1.5 DIN439B
461251	1	NUT HEX M20 X 2.5 JAMB
470466	1	WASHER D21.1/D12.2X2.5 LOCK
471124	1	WASHER, M6, Ø18/ 6.4X 1.6, SS
471126	1	WASHER, M8, Ø16/ 8.4X 1.6, SS
471133	1	WASHER D39/D23X3
480384	1	PIN COTTER 3/16 x 1-1/2"

parts-n°	order qty	description
615220	1	PIN 25 X 910 FOR EAGLE
615348	1	CLEVIS TURNBUCKLE M16 RH
615357	1	SHAFT W.SPROCKET EAGLE 60'3PT
615596	1	TURN BUCKLE ANCHOR M16 LH
615774	1	ANCHOR LH F.M16 TURNBUCKLE
637091	1	CABLE FRONT EAGLE D7X2895
637333	1	CABLE REAR D7X3055
637387	1	BOOM WING BRKWAY E. 60-90'
637594	1	BOOM WING 60'3PT OUTER RH
637595	1	BOOM WING 60'3PT OUTER LH
637887	1	HINGE EAGLE LH 45'-66' '97
637888	1	HINGE EAGLE RH 45'-66' '97
741475	1	HINGE HARDWARE KIT,M10+M16 '97
16189903	1	PLATE F, EAGLE STOPARM
21091900	1	LINK HEAD M16 x D17 DELTA
24262900	1	RUBBER STOP D50X40 M10X33
28043600	1	CHAIN 5/8X810MM (51 LINKS)
61004503	1	BOOM STOP SPB/SPC
63044200	1	CABLE CENTER EAG. 7mm x 1390mm
63050100	1	WING INNER SPB R.H. 05
63050200	1	WING INNER SPB L.H. 05
78122900	1	CYLINDER 40/22X300MM RED

BOOM EAGLE 3PT CENTER SECTION
D0340-HIN, 01:01:16

Date 12.08.2020 11:37

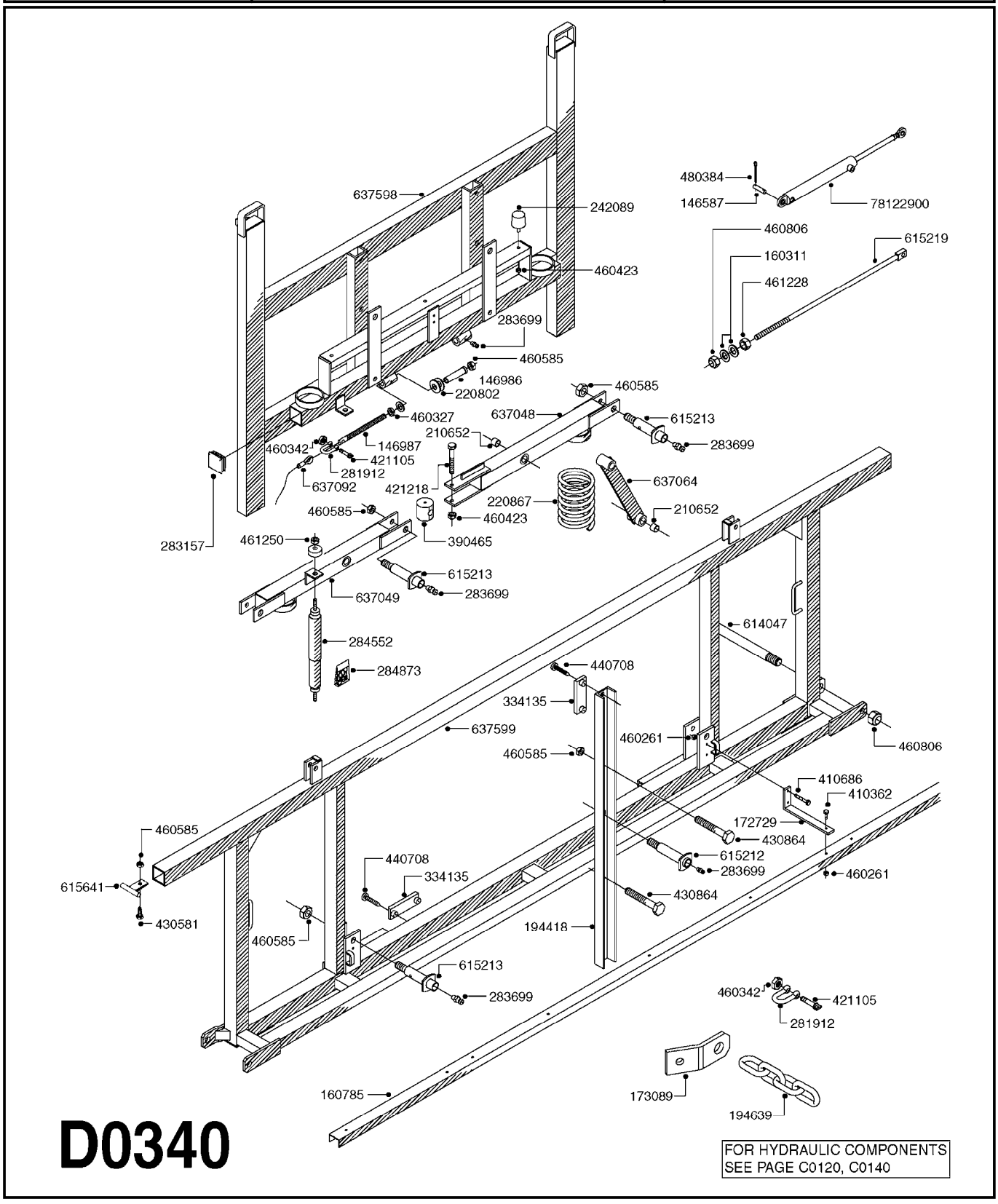

D0340

FOR HYDRAULIC COMPONENTS
SEE PAGE C0120, C0140

Agroparts: www.HARDI-INTERNATIONAL.com

BOOM EAGLE 3PT CENTER SECTION
D0340-HIN, 01:01:16

Date 12.08.2020 11:37

parts-n°	order qty	description
146587	1	PIN D16.8 X 65
146986	1	BUSHING D26/D16.5x95
146987	1	PIN THREADED F.CENTER CABLE
160311	1	WASHER D30/D20.4X2
160785	1	NOZZLE TRACK 3PT EAG. L=3168mm
172729	1	BRACKET F.NOZ.TRACK 80/90'
173089	1	TAB F.CHAIN 3PT.BOOM
194418	1	U CHANNEL 65 X 1175 CENTER EAG
194639	1	CHAIN 1/4" X 36" 3 PT BOOM
210652	1	BUSHING TEFLON D25/D22X20
220802	1	BELLVILLE WASHER D50/D22.4X2
220867	1	COMP SPRING DI106 L320 D14 N9,55
242089	1	RUBBER STOP D50X40 M10
281912	1	SHACKLE M-10
283157	1	PLUG F.DRAIN 60X60X4
283699	1	GREASE NIPPLE M6X1
284552	1	SHOCK ABSORBER F.EAGLE BOOM
284873	1	KIT F.SHOCK ABSORBER HDW.EAG.
334135	1	SLIDE SHOE 140X45X15
390465	1	JOINER BLOCK TRAPEEZE EAGLE
410362	1	BOLT HEX 8.8 SS M6X20
410686	1	BOLT HEX 8.8 DEL M6X30
421105	1	M10X45 MACHINE SCREW STAINLESS
421218	1	BOLT HEX 8.8 DEL M10X90
430581	1	BOLT HEX 8.8 DEL M16X40 FT
430864	1	BOLT HEX 8.8 DEL M16X120
440708	1	SCREW M5.5X16 SELF TAPPING SS
460261	1	NUT HEX M6X1.00 LOCK DIN985 A2 SS
460327	1	NUT HEX M16X2
460342	1	NUT HEX M10 DEL DIN934
460423	1	NUT HEX M10X1.50 LOCK DIN985A2 SS
460585	1	LOCKING NUT M16 DIN985 A2 SS
460806	1	NUT HEX M20X2.50 LOCK DIN985A2 SS
461228	1	NUT HEX M20
461250	1	NUT HEX 3/8' NF
480384	1	PIN COTTER 3/16 x 1-1/2"
614047	1	PIN D22 X 243 HINGE EAGLE
615212	1	PIN D22 X 84 LUBED F.EAGLE
615213	1	PIN D22 X 70 LUBED F.EAGLE
615219	1	TILT CYL.REPLACEMENT EAGLE
615641	1	SAFETY BAR F.WNG TLT 45-66'
637048	1	SUSP.ARM RIGHT EAGLE
637049	1	SUSP.ARM LEFT EAGLE
637064	1	TRAPEEZE ARM EAGLE 45'-66'
637092	1	CABLE CEN.EAG 7x1370mm63044200
637598	1	CENTER LIFT FRAME 3PT EAGLE
637599	1	CENTER SECTION EAGLE 3PT.
78122900	1	CYLINDER 40/22X300MM RED

	Agroparts: www.HARDI-INTERNATIONAL.com	
HARDI	BOOM EAGLE 3PT CENTER STAND D0350-HIN, 01:01:16	Page 0 Date 12.08.2020 11:37

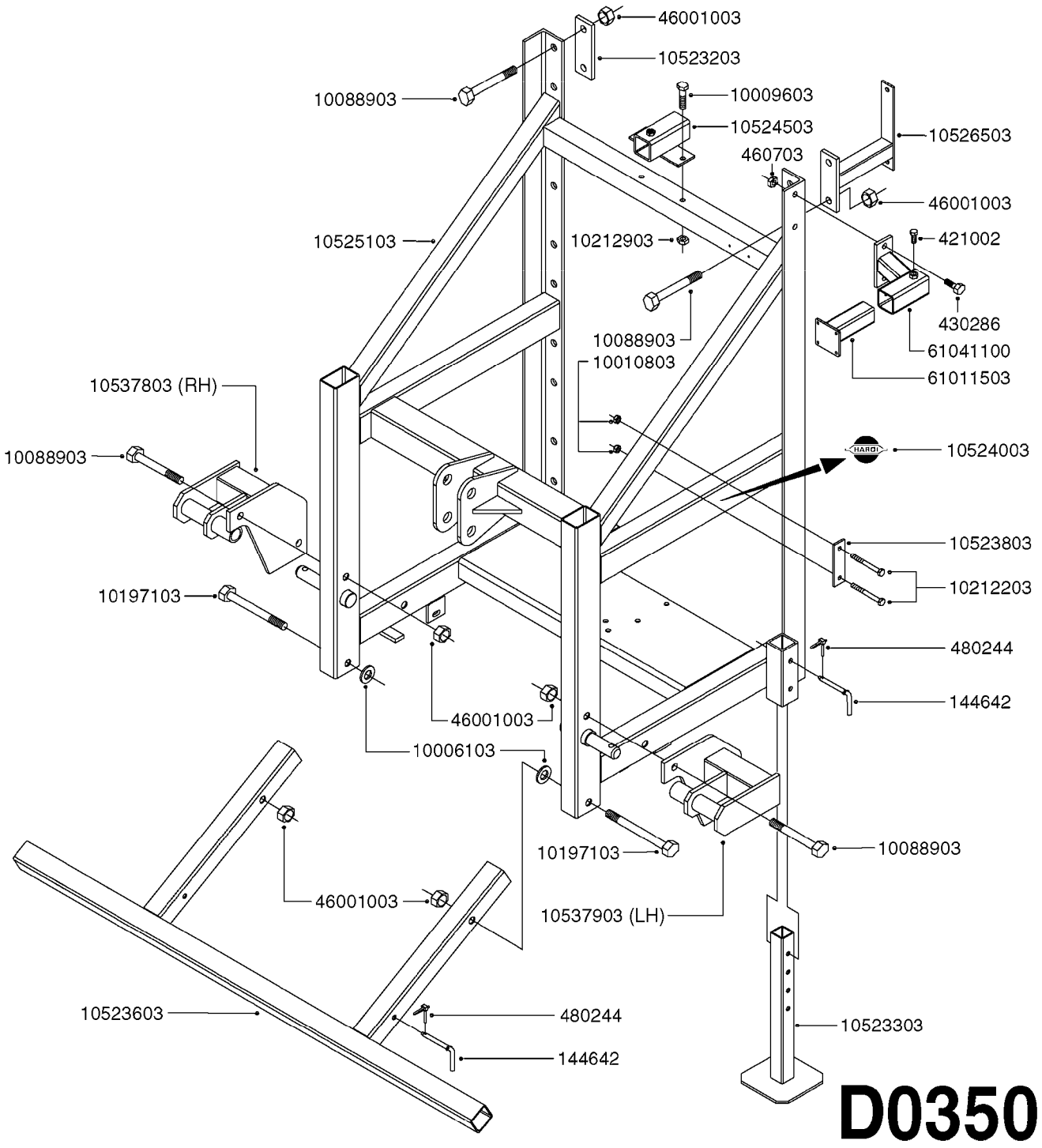

Agroparts: www.HARDI-INTERNATIONAL.com

BOOM EAGLE 3PT CENTER STAND
D0350-HIN, 01:01:16

Date 12.08.2020 11:37

parts-n°	order qty	description
144642	1	LOCKING PAWL D10X65MM
421002	1	BOLT HEX 8.8 DEL M10X30 FT DIN933
430286	1	BOLT HEX 8.8 DEL M12X30 FT
460703	1	NUT HEX M12X1.75 LOCK DIN985A2 SS
480244	1	PIN SNAP D4.5
10006103	1	WASHER PLATE 5/8
10009603	1	BOLT HEX 3/8 NC GR.2 01.00"
10010803	1	NUT HEX NC (NYLON LOCK) 5/16
10088903	1	BOLT HEX 5/8 NC GR.2 03.50"
10197103	1	BOLT HEX 5/8 NC GR.5 05.00"
10212203	1	BOLT HEX 5/16 NC GR.5 03.00"
10212903	1	NUT HEX NC (NYLON LOCK) 3/8"
10523203	1	PLATE CLAMP F.3PT.BOOM
10523303	1	STAND REAR W/M F.3PT.BOOM
10523603	1	STAND FRONT W/M F.3PT BOOM
10523803	1	CLAMP PLATE F.SCF 3PT.BOOM
10524003	1	DECAL COMPANY 3.5"X2.7"
10524503	1	MOUNT BKT.F.EC 3PT.BOOM
10525103	1	FRAME W/M WITH PINS F/3PT.
10526503	1	BKT CLEAN WATER BOTTLE 3PT.
10537803	1	BKT.W/M RH CAT.3 QUICK HITCH
10537903	1	BKT.W/M LH CAT.3 QUICK HITCH
46001003	1	NUT HEX 5/8"-11 NYLOCK
61011503	1	PRESSURE REGULATOR MOUNT BRKT.
61041100	1	CONTROL POST F. MEGA

BOOM MEGA H-FRAME & CENTER
D0360-HIN, 01:01:16

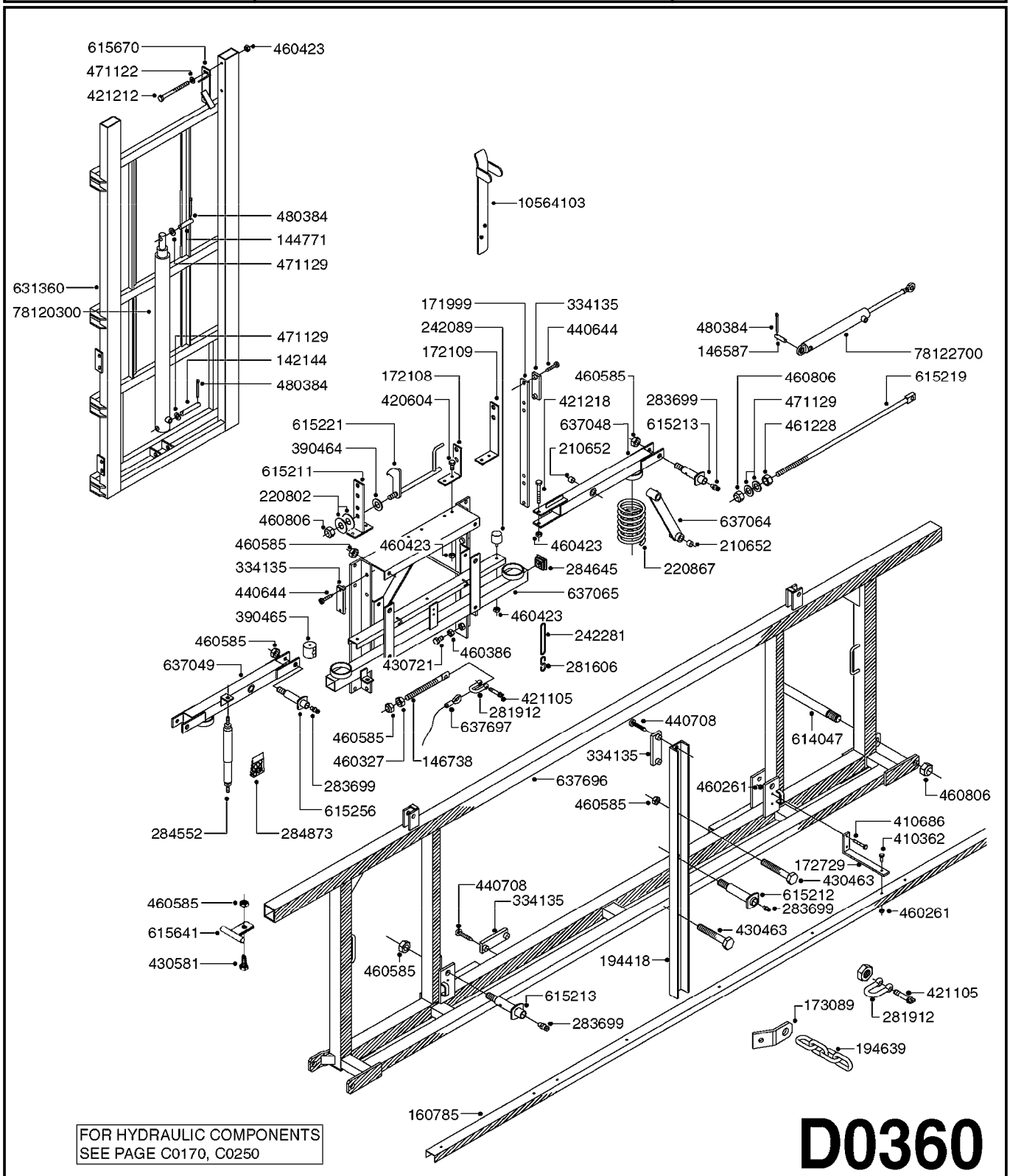

FOR HYDRAULIC COMPONENTS
SEE PAGE C0170, C0250

D0360

Agroparts: www.HARDI-INTERNATIONAL.com

BOOM MEGA H-FRAME & CENTER
D0360-HIN, 01:01:16

Date 12.08.2020 11:37

parts-n°	order qty	description
10564103	1	MOUNT BRKT F. HOSES MEGA
142144	1	PIN 20 X 115MM
144771	1	PIN D19.8 X 80
146587	1	PIN D16.8 X 65
146738	1	PIN FOR CENTER CABLE EAGLE
160785	1	NOZZLE TRACK 3PT EAG. L=3168mm
171999	1	FLATBAR
172108	1	HOOKMOUNT SHORT EAGLE
172109	1	HOOKMOUNT LONG EAGLE
172729	1	BRACKET F.NOZ.TRACK 80/90'
173089	1	TAB F.CHAIN 3PT.BOOM
194418	1	U CHANNEL 65 X 1175 CENTER EAG
194639	1	CHAIN 1/4" X 36" 3 PT BOOM
210652	1	BUSHING TEFLON D25/D22X20
220802	1	BELLVILLE WASHER D50/D22.4X2
220867	1	COMP SPRING DI106 L320 D14 N9,55
242089	1	RUBBER STOP D50X40 M10
242281	1	RUBBER BAND OVAL 180MM
281606	1	S-HOOK GALVANIZED
281912	1	SHACKLE M-10
283699	1	GREASE NIPPLE M6X1
284552	1	SHOCK ABSORBER F.EAGLE BOOM
284645	1	PLUG 60x60x2
284873	1	KIT F.SHOCK ABSORBER HDW.EAG.
334135	1	SLIDE SHOE 140X45X15
390464	1	WASHER NYLON 40/21/3
390465	1	JOINER BLOCK TRAPEEZE EAGLE
410362	1	BOLT HEX 8.8 SS M6X20
410686	1	BOLT HEX 8.8 DEL M6X30
420604	1	BOLT HEX 8.8 DEL M10X25 FT DIN933
421105	1	M10X45 MACHINE SCREW STAINLESS
421212	1	BOLT HEX 8.8 DEL M10X110 FT
421218	1	BOLT HEX 8.8 DEL M10X90
430463	1	BOLT HEX 8.8 DEL M16X110
430581	1	BOLT HEX 8.8 DEL M16X40 FT
430721	1	BOLT HEX 8.8 DEL M12X40 FT
440644	1	SCREW NO.10 5/8"
440708	1	SCREW M5.5X16 SELF TAPPING SS
460261	1	NUT HEX M6X1.00 LOCK DIN985 A2 SS
460327	1	NUT HEX M16X2
460386	1	NUT HEX M12X1.75
460423	1	NUT HEX M10X1.50 LOCK DIN985A2 SS
460585	1	LOCKING NUT M16 DIN985 A2 SS
460806	1	NUT HEX M20X2.50 LOCK DIN985A2 SS
461228	1	NUT HEX M20
471122	1	WASHER, M10, Ø20/10.5X 2.0, SS
471129	1	WASHER, M20, Ø37/21.0X 3.0, SS
480384	1	PIN COTTER 3/16 x 1-1/2"
614047	1	PIN D22 X 243 HINGE EAGLE
615211	1	HOOKMOUNT WELDMENT EAGLE
615212	1	PIN D22 X 84 LUBED F.EAGLE
615213	1	PIN D22 X 70 LUBED F.EAGLE
615219	1	TILT CYL.REPLACEMENT EAGLE
615221	1	HOOK WELDMENT EAGLE
615256	1	PIN 22 X 70 SHORT THREA. EAGLE
615641	1	SAFETY BAR F.WNG TLT 45-66'
615670	1	HOOK GUIDE MEGA
631360	1	UPRIGHT MEGA EAGLE
637048	1	SUSP.ARM RIGHT EAGLE
637049	1	SUSP.ARM LEFT EAGLE
637064	1	TRAPEEZE ARM EAGLE 45'-66'

BOOM MEGA H-FRAME & CENTER
D0360-HIN, 01:01:16

Date 12.08.2020 11:37

parts-n°	order qty	description
637065	1	CENTER PART H FRAME EAGLE
637696	1	CENTER SECTION F.MEGA
637697	1	CABLE CENTER MEGA 7mm x 1230mm
78120300	1	CYLINDER 60/50/30 1100MM
78122700	1	CYLINDER D40/22X300MM RED

BOOM EAGLE WINGS 80',88',90'
D0370-HIN, 31:05:17

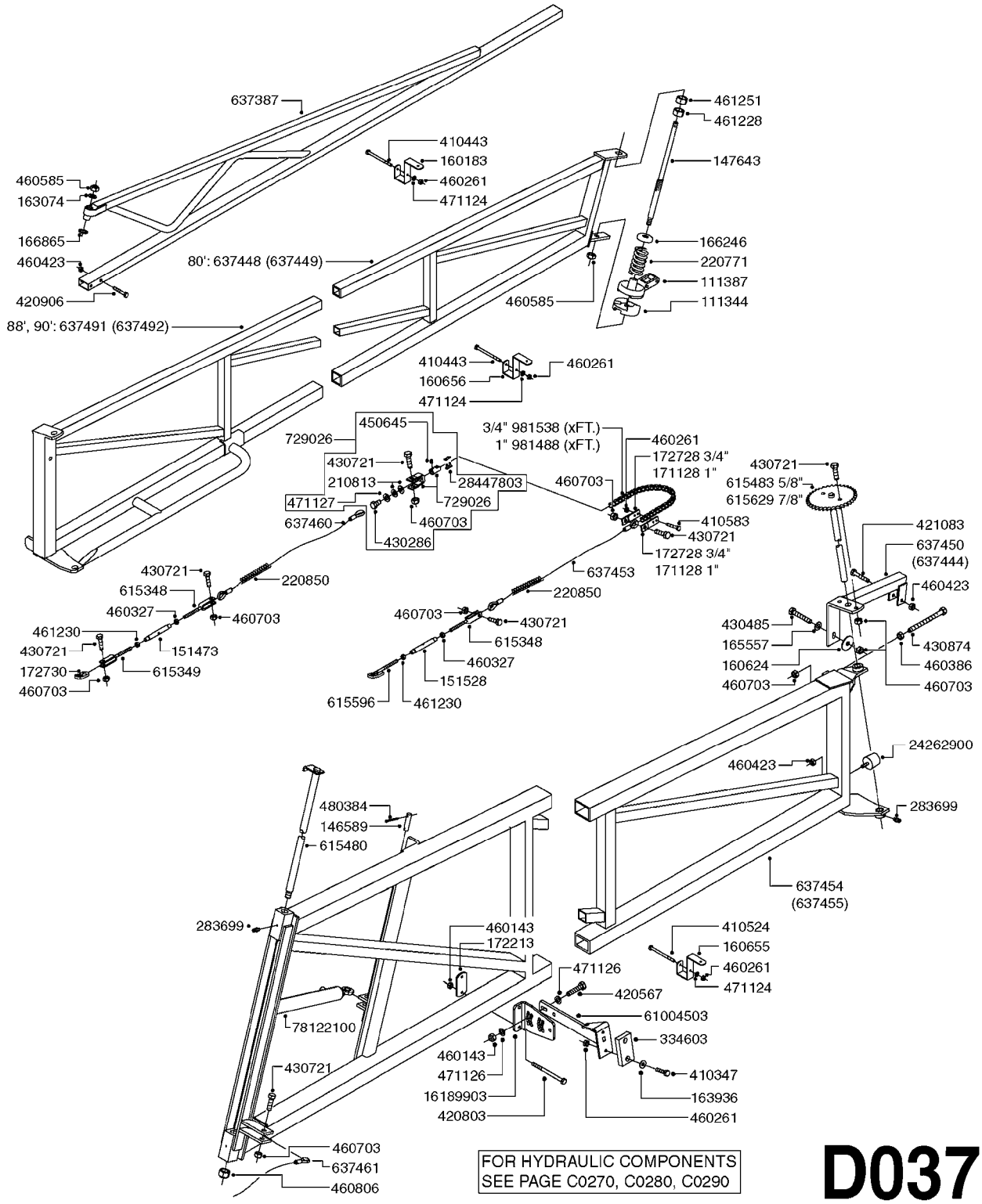

FOR HYDRAULIC COMPONENTS
SEE PAGE C0270, C0280, C0290

D0370

Agroparts: www.HARDI-INTERNATIONAL.com

BOOM EAGLE WINGS 80',88',90'
D0370-HIN, 31:05:17

Date 12.08.2020 11:37

parts-n°	order qty	description
111344	1	CLAW CLUTCH Ø100/Ø20,5 UNDER PART RED
111387	1	CLAW CLUTCH D100 UPPER PART
146589	1	PIN D19.8 X 65
147643	1	AXLE F.BM BRKWY. W. ZERT L=426
151473	1	TURN BUCKLE HOUSING M16-200
151528	1	TURN BUCKLE HOUSING M16-130
160183	1	CLAMP NOZZLE TUBE 50X30
160624	1	WASHER PLATE 6/13 X3
160655	1	CLAMP NOZZLE TUBE 80X60
160656	1	CLAMP NOZZLE TUBE 50X50
163074	1	WASHER D54/D17X3
163936	1	WASHER D15/D6.2X1
165557	1	WASHER D28.0/D12.2X2.0 SS
166246	1	WASHER CUP D53 F.SPRING
166865	1	WASHER D35/D25X2
171128	1	FLAT BAR 6X40
172213	1	FLAT BAR F.BOOM STRAP
172728	1	FLATBAR
172730	1	FLATBAR
210813	1	WASHER, TEFLON COATED
220771	1	SPRING D53/D43X100
220850	1	SPRING EXT.D49/7X250
283699	1	GREASE NIPPLE M6X1
334603	1	RUBBER STOP 86X48X15
410347	1	SCREW M6X20 8.8
410443	1	BOLT HEX 8.8 DEL M6X70
410524	1	BOLT HEX 8.8 DEL M6X100
410583	1	BOLT HEX 8.8 DEL M6X40
420567	1	BOLT HEX 8.8 DEL M8X30 FT
420803	1	BOLT HEX 8.8 DEL M8X90
420906	1	BOLT HEX 8.8 DEL M10X60
421083	1	BOLT HEX 8.8 DEL M10X65
430286	1	BOLT HEX 8.8 DEL M12X30 FT
430485	1	BOLT HEX 8.8 DEL M12X90
430721	1	BOLT HEX 8.8 DEL M12X40 FT
430874	1	SCREW SET 8.8 DEL M12X70 FT
450645	1	SCREW ALLAN M6 X 6 SS
460143	1	LOCK NUT M8 SST A2 DIN985
460261	1	NUT HEX M6X1.00 LOCK DIN985 A2 SS
460327	1	NUT HEX M16X2
460386	1	NUT HEX M12X1.75
460423	1	NUT HEX M10X1.50 LOCK DIN985A2 SS
460585	1	LOCKING NUT M16 DIN985 A2 SS
460703	1	NUT HEX M12X1.75 LOCK DIN985A2 SS
460806	1	NUT HEX M20X2.50 LOCK DIN985A2 SS
461228	1	NUT HEX M20
461230	1	NUT HEX M16X2 LH THREAD
461251	1	NUT HEX M20 X 2.5 JAMB
471124	1	WASHER, M6, Ø18/ 6.4X 1.6, SS
471126	1	WASHER, M8, Ø16/ 8.4X 1.6, SS
471127	1	WASHER, M12, Ø24/13X24X2.5 SS
480384	1	PIN COTTER 3/16 x 1-1/2"
615348	1	CLEVIS TURNBUCKLE M16 RH
615349	1	CLEVIS TURNBUCKLE M16 LH
615480	1	PIN F.HINGE ASSY.
615483	1	SHAFT W.SPROCKET 3/4" 80'-90'
615596	1	TURN BUCKLE ANCHOR M16 LH
615629	1	SHAFT W.SPROCKET 1' EAGLE 90'
637387	1	BOOM WING BRKWAY E. 60-90'
637444	1	BRACKET HINGE SUPP. LH 80/90'
637448	1	BOOM WING OUTER R.80'EAGLE

parts-n°	order qty	description
637449	1	BOOM WING OUTER L.80'EAGLE
637450	1	BRACKET HINGE SUPP. RH 80/90'
637453	1	CABLE REAR D7X4655 80/90'
637454	1	BOOM WING INTERM.R.80/90'EAGLE
637455	1	BOOM WING INTERM.L.80/90'EAGLE
637460	1	CABLE FRONT D10X4360 80/90'
637461	1	CABLE CENTER 80/90' 7mm x935mm
637491	1	BOOM WING OUTER RIGHT 90'
637492	1	BOOM WING OUTER LEFT 90'
729026	1	SWIVEL ASSY.F.90'CABLE
981488	1	CHAIN ROLLER 1"X17.02 90'EAGLE
981538	1	CHAIN 19.05 x11.53mm ISO 12B-1
16189903	1	PLATE F, EAGLE STOPARM
24262900	1	RUBBER STOP D50X40 M10X33
28447803	1	CHAIN LINK 3/4" F. 80'-90'
61004503	1	BOOM STOP SPB/SPC
78122100	1	CYLINDER DOUBLE D50/25-298

BOOM EAG H-FRAME/CENTER 80-90'
D0380-HIN, 16:11:17

Date 12.08.2020 11:37

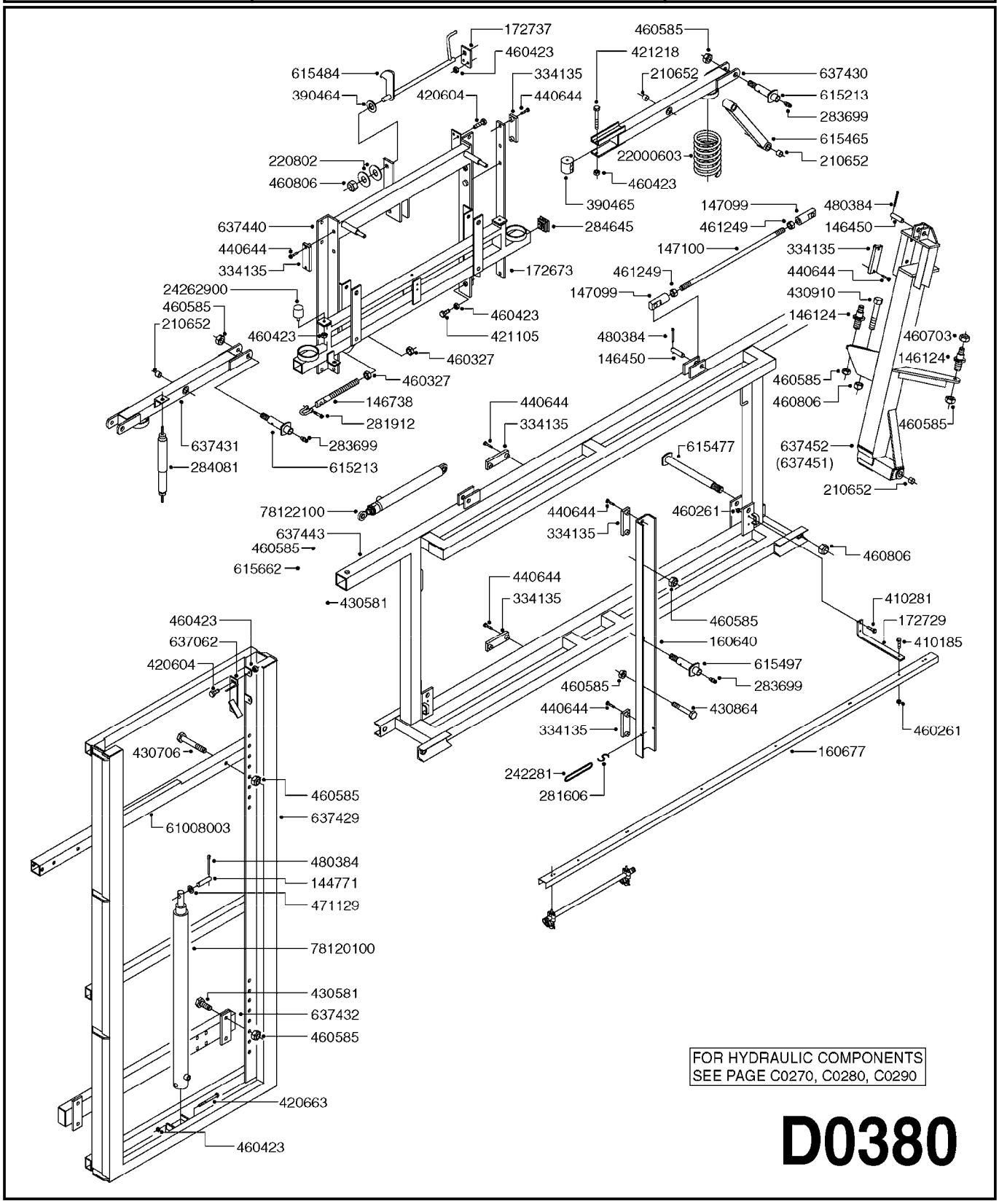

FOR HYDRAULIC COMPONENTS
SEE PAGE C0270, C0280, C0290

D0380

	Agroparts: www.HARDI-INTERNATIONAL.com	
HARDI	BOOM EAG H-FRAME/CENTER 80-90' D0380-HIN, 16:11:17	Page 1 Date 12.08.2020 11:37

parts-n°	order qty	description
144771	1	PIN D19.8 X 80
146124	1	ANCHOR PIN CABLE EAGLE
146450	1	PIN D19.8 X 75 WITH 2 X D5
146738	1	PIN FOR CENTER CABLE EAGLE
147099	1	CLEVIS F.TILT ARM
147100	1	ROD F.TILT 80/90'
160640	1	U CHANNEL 80/90'
160677	1	NOZZLE TRACK 80/90'
172673	1	FLATBAR-SLIDE SHOE MNT.80-90'
172729	1	BRACKET F.NOZ.TRACK 80/90'
172737	1	BRACKET F.HOOK LIFT 80/90'
210652	1	BUSHING TEFLON D25/D22X20
220802	1	BELLVILLE WASHER D50/D22.4X2
242281	1	RUBBER BAND OVAL 180MM
281606	1	S-HOOK GALVANIZED
281912	1	SHACKLE M-10
283699	1	GREASE NIPPLE M6X1
284081	1	SHOCK ABSORBER 150 1121
284645	1	PLUG 60x60x2
334135	1	SLIDE SHOE 140X45X15
390464	1	WASHER NYLON 40/21/3
390465	1	JOINER BLOCK TRAPEEZE EAGLE
410185	1	BOLT HEX 8.8 DEL M6X16
410281	1	BOLT HEX 8.8 DEL M6X25 DIN933 A2
420604	1	BOLT HEX 8.8 DEL M10X25 FT DIN933
420663	1	BOLT HEX 8.8 DEL M10X120 A4-80
421105	1	M10X45 MACHINE SCREW STAINLESS
421218	1	BOLT HEX 8.8 DEL M10X90
430581	1	BOLT HEX 8.8 DEL M16X40 FT
430706	1	BOLT HEX 8.8 ZINC CLEAR M16X90
430864	1	BOLT HEX 8.8 DEL M16X120
430910	1	BOLT HEX 8.8 DEL M20X110
440644	1	SCREW NO.10 5/8"
460261	1	NUT HEX M6X1.00 LOCK DIN985 A2 SS
460327	1	NUT HEX M16X2
460423	1	NUT HEX M10X1.50 LOCK DIN985A2 SS
460585	1	LOCKING NUT M16 DIN985 A2 SS
460703	1	NUT HEX M12X1.75 LOCK DIN985A2 SS
460806	1	NUT HEX M20X2.50 LOCK DIN985A2 SS
461249	1	NUT M22X1.5 DIN439B
471129	1	WASHER, M20, Ø37/21.0X 3.0, SS
480384	1	PIN COTTER 3/16 x 1-1/2"
615213	1	PIN D22 X 70 LUBED F.EAGLE
615465	1	TRAPEZE ARM 80/90'
615477	1	PIN F.HINGE 80/90'
615484	1	HOOK ASSY 80/90'
615497	1	PIN D22 X 159 LUBED F.EAGLE
615662	1	SAFETY BAR F. TILT 80-90'
637062	1	HOOK GUIDE EAGLE
637429	1	H FRAME 80/90'
637430	1	SUSPENSION ARM RIGHT 80/90'
637431	1	SUSPENSION ARM LEFT 80/90'
637432	1	MOUNT LOWER H-FRAME 80'
637440	1	CENTER PART H-FRAME 80/90'
637443	1	OUTER FRAME F.CENTER 80'
637451	1	HINGE ASSY.LEFT 80/90'
637452	1	HINGE ASSY.RIGHT 80/90'
22000603	1	SPRING, COIL, SPC 80-90', RED
24262900	1	RUBBER STOP D50X40 M10X33
61008003	1	TRANSPORT HOOK CROSS BAR SPC-H
78120100	1	CYLINDER TELESC.65/40-1237

parts-n°	order qty	description
78122100	1	CYLINDER DOUBLE D50/25-298

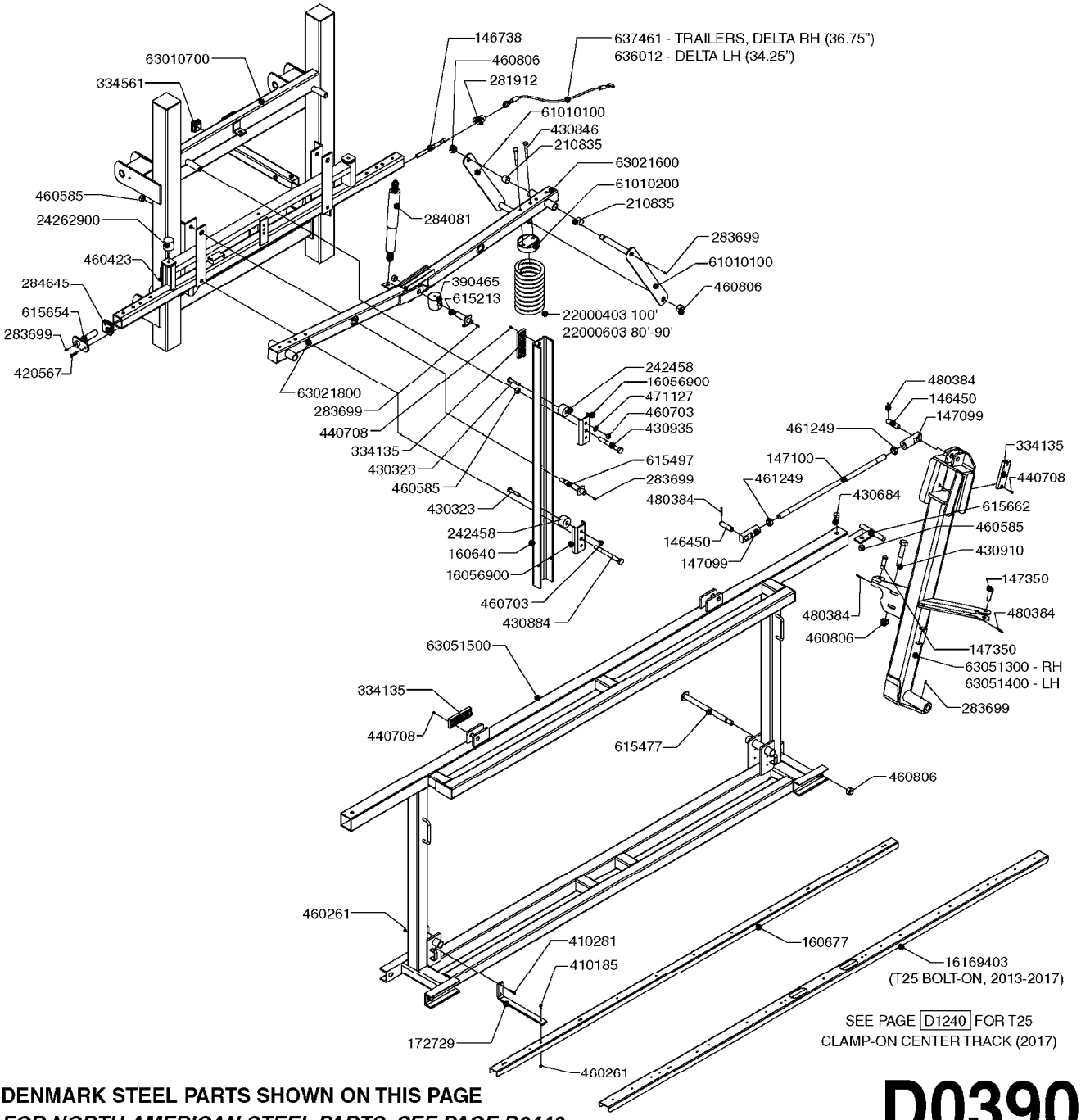

DENMARK STEEL PARTS SHOWN ON THIS PAGE

FOR NORTH AMERICAN STEEL PARTS, SEE PAGE D0440

D0390

Agroparts: www.HARDI-INTERNATIONAL.com

BOOM SPC PARAL.CTR.80-100' DK
D0390-HIN, 26:09:19

Date 12.08.2020 11:37

parts-n°	order qty	description
146450	1	PIN D19.8 X 75 WITH 2 X D5
146738	1	PIN FOR CENTER CABLE EAGLE
147099	1	CLEVIS F.TILT ARM
147100	1	ROD F.TILT 80/90'
147350	1	PIN D16.8 L60MM
160640	1	U CHANNEL 80/90'
160677	1	NOZZLE TRACK 80/90'
172729	1	BRACKET F.NOZ.TRACK 80/90'
210835	1	BUSHING D28/25 L=25
242458	1	BUSHING RUBBER DAMPER SPC EAG.
281912	1	SHACKLE M-10
283699	1	GREASE NIPPLE M6X1
284081	1	SHOCK ABSORBER 150 1121
284645	1	PLUG 60x60x2
334135	1	SLIDE SHOE 140X45X15
334561	1	PLUG 50x50x2 F.SQ.TUBE
390465	1	JOINER BLOCK TRAPEEZE EAGLE
410185	1	BOLT HEX 8.8 DEL M6X16
410281	1	BOLT HEX 8.8 DEL M6X25 DIN933 A2
420567	1	BOLT HEX 8.8 DEL M8X30 FT
430323	1	BOLT HEX 8.8 DEL M12X60
430684	1	BOLT HEX 8.8 DEL M16X30 FT
430846	1	BOLT HEX 8.8 DEL M12X80
430884	1	BOLT HEX 8.8 DEL M16X160
430910	1	BOLT HEX 8.8 DEL M20X110
430935	1	BOLT HM16-130/44 8.8 DAC DIN931
440708	1	SCREW M5.5X16 SELF TAPPING SS
460261	1	NUT HEX M6X1.00 LOCK DIN985 A2 SS
460423	1	NUT HEX M10X1.50 LOCK DIN985A2 SS
460585	1	LOCKING NUT M16 DIN985 A2 SS
460703	1	NUT HEX M12X1.75 LOCK DIN985A2 SS
460806	1	NUT HEX M20X2.50 LOCK DIN985A2 SS
461249	1	NUT M22X1.5 DIN439B
471127	1	WASHER, M12, Ø24/13X24X2.5 SS
480384	1	PIN COTTER 3/16 x 1-1/2"
615213	1	PIN D22 X 70 LUBED F.EAGLE
615477	1	PIN F.HINGE 80/90'
615497	1	PIN D22 X 159 LUBED F.EAGLE
615654	1	PIN D25 X 123 F. PARALIFT
615662	1	SAFETY BAR F. TILT 80-90'
636012	1	CABLE,CENTER 80/90 7mm X 870mm
637461	1	CABLE CENTER 80/90' 7mm x935mm
16056900	1	PLATE SPC EAGLE 80-100
16169403	1	CENTER TRACK, SPC, 75-90' T25
22000403	1	SPRING SPC 100' CENTER SECTION
22000603	1	SPRING, COIL, SPC 80-90', RED
24262900	1	RUBBER STOP D50X40 M10X33
61010100	1	TRAPEZE ARM SPC 80-100
61010200	1	SPRING CAP SPC 80-100
63010700	1	LIFT FRAME SPC EAG 80-100
63021600	1	SUSPENSION ARM SPC 80-100
63021800	1	SUSPENSION ARM SPC 80-100
63051300	1	HINGE 80'-100' RH / SPC 05
63051400	1	HINGE 80'-100' LH / SPC 05
63051500	1	CENTER FRAME SPC 05

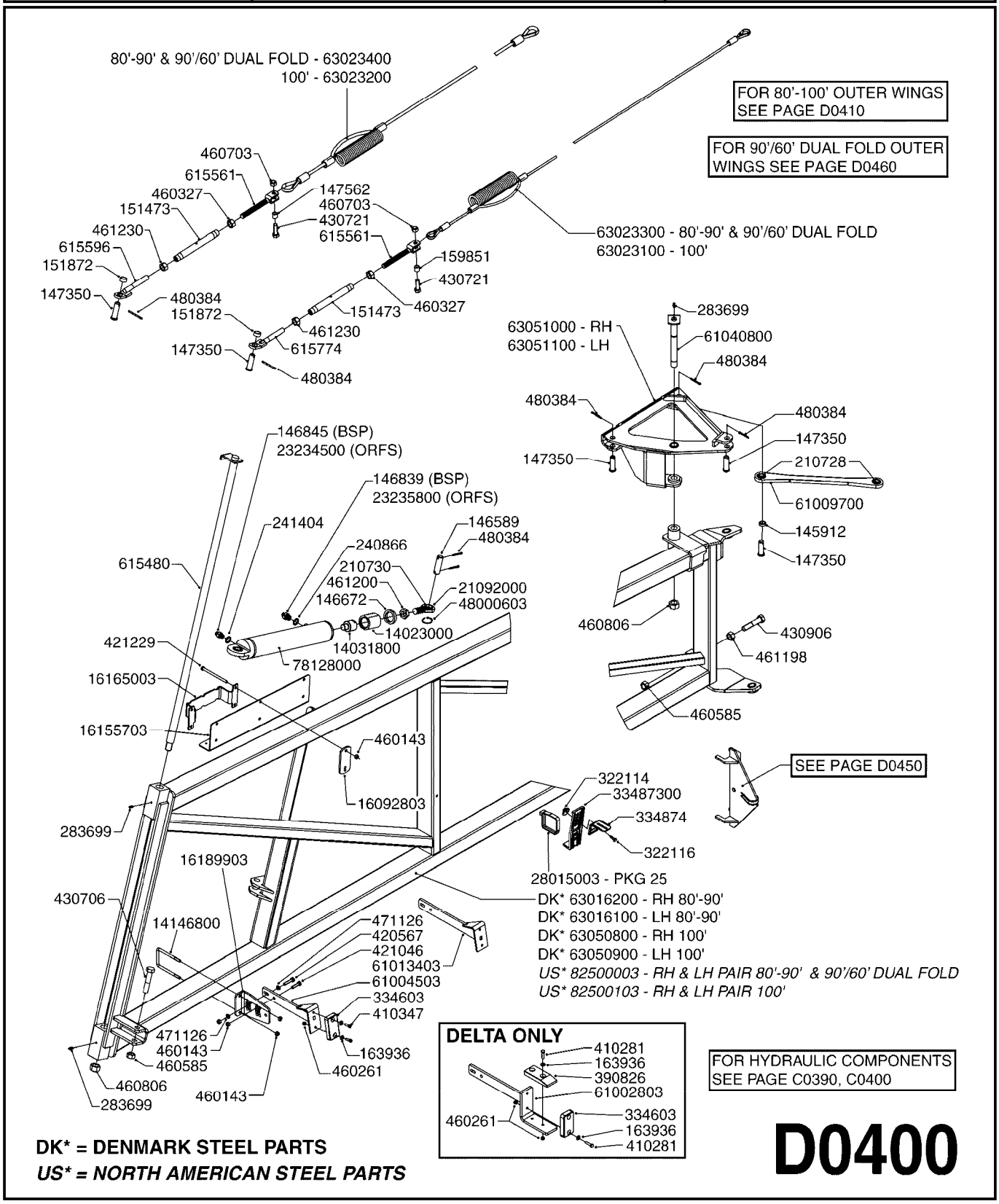

DK* = DENMARK STEEL PARTS

US* = NORTH AMERICAN STEEL PARTS

D0400

Agroparts: www.HARDI-INTERNATIONAL.com

BOOM - SPC INNER WING 80-100'
D0400-HIN, 05:05:20

Date 12.08.2020 11:37

parts-n°	order qty	description
145912	1	BUSHING D19.8/D17.0X7MM
146589	1	PIN D19.8 X 65
146672	1	NUT HEX LOCK F.ADJUSTER
146839	1	HEX NIPPLE 1/4"X3/8" BSP 0.7MM
146845	1	HEX NIPPLE 1/4"X1/4"
147350	1	PIN D16.8 L60MM
147562	1	BUSHING D19.8/17.0 L=15
151473	1	TURN BUCKLE HOUSING M16-200
151872	1	BUSHING D22.0/18.0 10MM
159851	1	BUSHING Ø16.0/13.0 L=16 DEL
163936	1	WASHER D15/D6.2X1
210728	1	BEARING F.LINK HEAD M17
210730	1	BEARING F.LINK HEAD M20
240866	1	DOWTYSEAL 3/8"
241404	1	DOWTY SEAL 1/4"
283699	1	GREASE NIPPLE M6X1
322114	1	NUT PLASTIC F.NOZZ.H
322116	1	BOLT PLASTIC F.NOZZ.H.
334603	1	RUBBER STOP 86X48X15
334874	1	NOZZLE HOLDER - TOP HALF
390826	1	SLIDE PAD F.TRANSPORT BKT.CM/D
410281	1	BOLT HEX 8.8 DEL M6X25 DIN933 A2
410347	1	SCREW M6X20 8.8
420567	1	BOLT HEX 8.8 DEL M8X30 FT
421046	1	BOLT HEX M8X25/25 A2 SS DIN933
421229	1	BOLT HEX 8.8 DEL M8x120
430706	1	BOLT HEX 8.8 ZINC CLEAR M16X90
430721	1	BOLT HEX 8.8 DEL M12X40 FT
430906	1	BOLT HEX 8.8 DEL M16X70 FT
460143	1	LOCK NUT M8 SST A2 DIN985
460261	1	NUT HEX M6X1.00 LOCK DIN985 A2 SS
460327	1	NUT HEX M16X2
460585	1	LOCKING NUT M16 DIN985 A2 SS
460703	1	NUT HEX M12X1.75 LOCK DIN985A2 SS
460806	1	NUT HEX M20X2.50 LOCK DIN985A2 SS
461198	1	NUT HEX M16X2 JAMB
461200	1	NUT HEX M20X1.5 JAMB.
461230	1	NUT HEX M16X2 LH THREAD
471126	1	WASHER, M8, Ø16/ 8.4X 1.6, SS
480384	1	PIN COTTER 3/16 x 1-1/2"
615480	1	PIN F.HINGE ASSY.
615561	1	CLEVIS F.TURNBUCKLE M16 RH
615596	1	TURN BUCKLE ANCHOR M16 LH
615774	1	ANCHOR LH F.M16 TURNBUCKLE
14023000	1	BUSHING Ø50.0/36.0 L=52 DEL
14031800	1	ADAPTOR F.HY CYLINDER L=40
14146800	1	U-BOLT M8 F. 80x60
16092803	1	PLATE F. TRANSPORT CM+
16155703	1	BRKT, 6 INLINE FILTERS
16165003	1	BRKT, SPC T25 FEED HOSE TIE-DOWN
16189903	1	PLATE F, EAGLE STOPARM
21092000	1	LINK HEAD M20 x D20 L=78 DELTA
23234500	1	HEX NIPPLE 1/4" - 9/16"
23235800	1	HEX NIPPLE 3/8"-9/16" - 0.7mm
28015003	1	PANDUIT TIE STRAP, PKG. 25
33487300	1	NOZZLE HOLDER - BOTTOM HALF
48000603	1	SNAP RING, Ø36X1.5 F.210730
61002803	1	TRANSPORT STOP DELTA-SPC
61004503	1	BOOM STOP SPB/SPC
61009700	1	FOLDING ARM / SPC
61013403	1	BOOM STOP LONG SPC

BOOM - SPC INNER WING 80-100'
D0400-HIN, 05:05:20

Date 12.08.2020 11:37

parts-n°	order qty	description
61040800	1	PIN THREADED D20 L=205 DELTA
63016100	1	WING INNER 80'-90'LH SPC 2007
63016200	1	WING INNER 80'-90'RH SPC 2007
63023100	1	CABLE Ø7 X 5280 / SPC REAR
63023200	1	CABLE Ø10 X 5180 / SPC FRONT
63023300	1	CABLE Ø7 X 4780 / SPC REAR
63023400	1	CABLE Ø10 X 4650 / SPC FRONT
63050800	1	WING INNER RH 100' SPC 05
63050900	1	WING INNER LH 100' SPC 05
63051000	1	FOLD MECHANISM R.H. SPC 05
63051100	1	FOLD MECHANISM L.H. SPC 05
78128000	1	CYLINDER DOUB. D60/30 L=300 09
82500003	1	WING INNER SET FPS SPC 80-90'
82500103	1	WING INNER SET FPS SPC 100'

BOOM - SPC OUTER WING 80-100'
D0410-HIN, 06:05:20

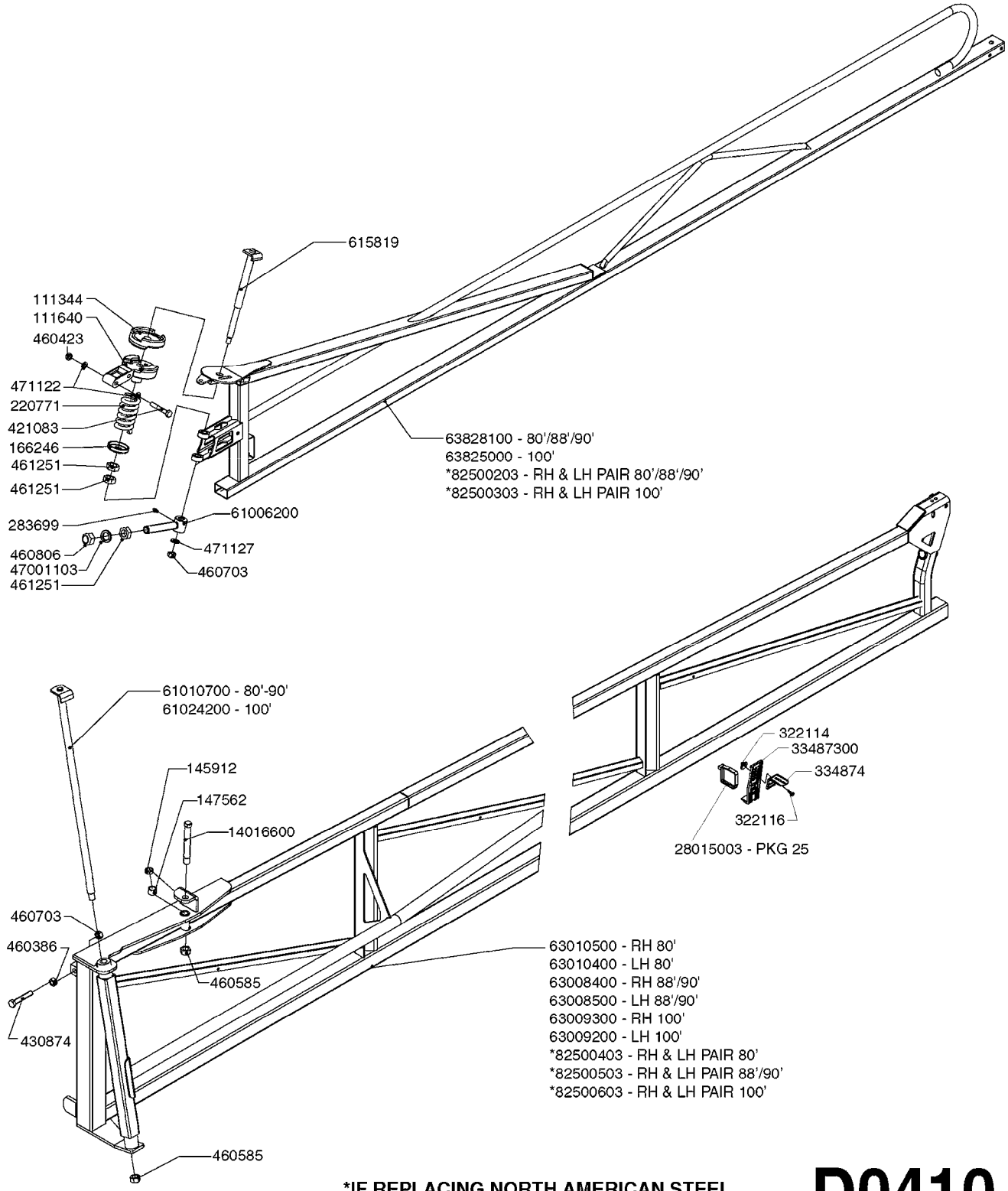

***IF REPLACING NORTH AMERICAN STEEL PARTS, MUST REPLACE BOTH SIDES**

D0410

Agroparts: www.HARDI-INTERNATIONAL.com

BOOM - SPC OUTER WING 80-100'
D0410-HIN, 06:05:20

Date 12.08.2020 11:37

parts-n°	order qty	description
111344	1	CLAW CLUTCH Ø100/Ø20,5 UNDER PART RED
111640	1	CLAW CLUTCH Ø100 TOP PART RED
145912	1	BUSHING D19.8/D17.0X7MM
147562	1	BUSHING D19.8/17.0 L=15
166246	1	WASHER CUP D53 F.SPRING
220771	1	SPRING D53/D43X100
283699	1	GREASE NIPPLE M6X1
322114	1	NUT PLASTIC F.NOZZ.H
322116	1	BOLT PLASTIC F.NOZZ.H.
334874	1	NOZZLE HOLDER - TOP HALF
421083	1	BOLT HEX 8.8 DEL M10X65
430874	1	SCREW SET 8.8 DEL M12X70 FT
460386	1	NUT HEX M12X1.75
460423	1	NUT HEX M10X1.50 LOCK DIN985A2 SS
460585	1	LOCKING NUT M16 DIN985 A2 SS
460703	1	NUT HEX M12X1.75 LOCK DIN985A2 SS
460806	1	NUT HEX M20X2.50 LOCK DIN985A2 SS
461251	1	NUT HEX M20 X 2.5 JAMB
471122	1	WASHER, M10, Ø20/10.5X 2.0, SS
471127	1	WASHER, M12, Ø24/13X24X2.5 SS
615819	1	PIN
14016600	1	PIN F. LINK ARM / SPC
28015003	1	PANDUIT TIE STRAP, PKG. 25
33487300	1	NOZZLE HOLDER - BOTTOM HALF
47001103	1	WASHER D20.5/D33X4 LOCK
61006200	1	ADJ. ARM F.BREAKAWAY FTZ
61010700	1	PIN F.HINGE 80-90'/SPC L=664
61024200	1	PIN F. PIVOT HINGE 100'/SPC
63008400	1	OUTERWING 90' RH / SPC
63008500	1	OUTERWING 90' LH / SPC
63009200	1	OUTERWING 100' LH / SPC
63009300	1	OUTERWING 100' RH / SPC
63010400	1	OUTERWING 80' LH / SPC
63010500	1	OUTERWING 80' RH / SPC
63828100	1	BREAKAWAY FTZ/SPC 2.5M, RED
63825000	1	BREAKAWAY FTZ/SPC 3.0M, RED
82500203	1	BREAKAWAY SET FPS SPC/FTZ 2.5M
82500303	1	BREAKAWAY SET FPS SPC/FTZ 3M
82500403	1	WING OUTER SET FPS 80' SPC
82500503	1	WING OUTER SET FPS 88-90' SPC
82500603	1	WING OUTER SET FPS 100' SPC

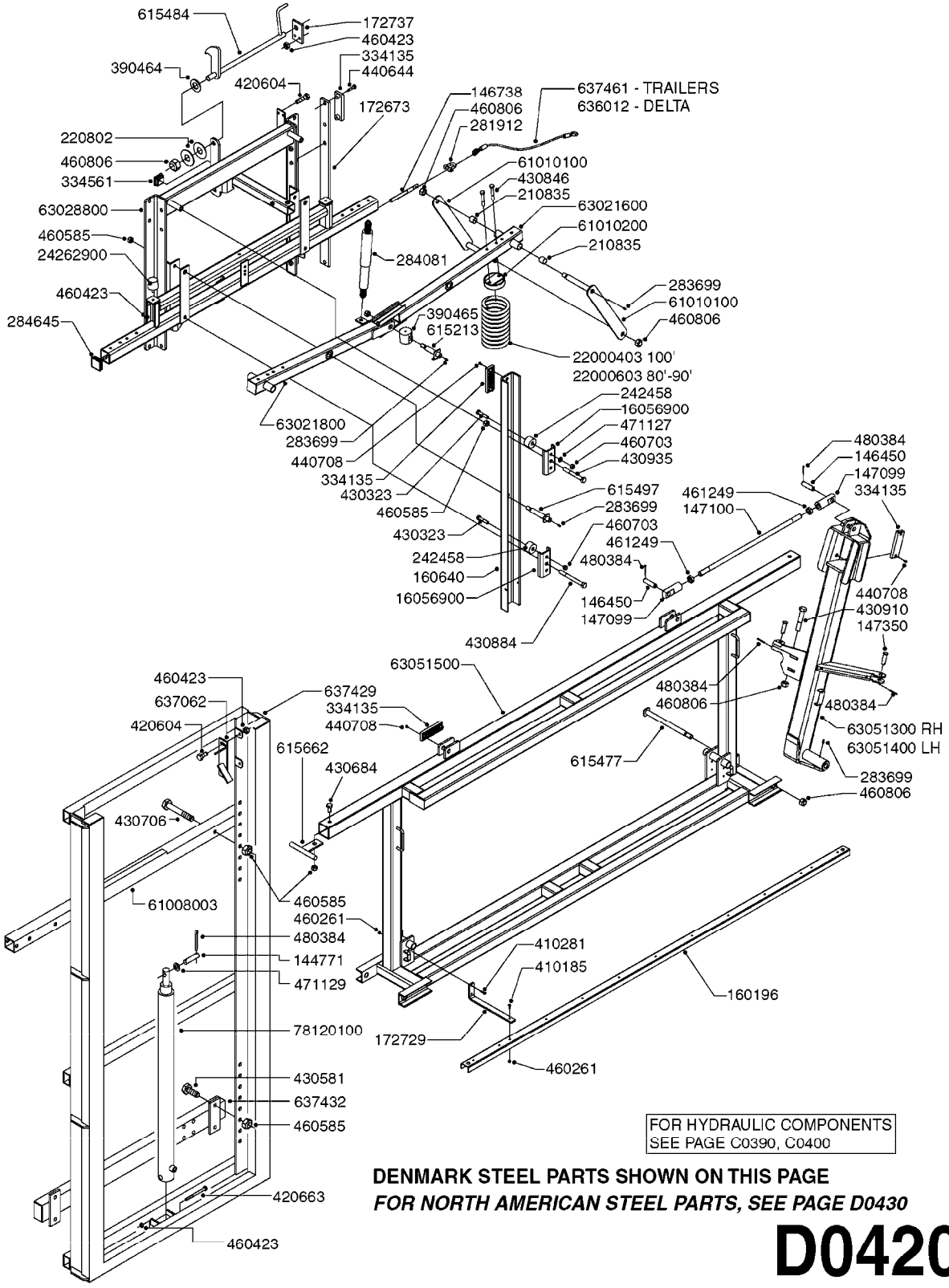

DENMARK STEEL PARTS SHOWN ON THIS PAGE

FOR NORTH AMERICAN STEEL PARTS, SEE PAGE D0430

D0420

HARDI	**Agroparts: www.HARDI-INTERNATIONAL.com**	
	BOOM-SPC H-FRAME CTR.80-100 DK D0420-HIN, 16:11:17	Page 1 Date 12.08.2020 11:37

parts-n°	order qty	description
144771	1	PIN D19.8 X 80
146450	1	PIN D19.8 X 75 WITH 2 X D5
146738	1	PIN FOR CENTER CABLE EAGLE
147099	1	CLEVIS F.TILT ARM
147100	1	ROD F.TILT 80/90'
147350	1	PIN D16.8 L60MM
160196	1	NOZZLE TRACK EAGLE
160640	1	U CHANNEL 80/90'
172673	1	FLATBAR-SLIDE SHOE MNT.80-90'
172729	1	BRACKET F.NOZ.TRACK 80/90'
172737	1	BRACKET F.HOOK LIFT 80/90'
210835	1	BUSHING D28/25 L=25
220802	1	BELLVILLE WASHER D50/D22.4X2
242458	1	BUSHING RUBBER DAMPER SPC EAG.
281912	1	SHACKLE M-10
283699	1	GREASE NIPPLE M6X1
284081	1	SHOCK ABSORBER 150 1121
284645	1	PLUG 60x60x2
334135	1	SLIDE SHOE 140X45X15
334561	1	PLUG 50x50x2 F.SQ.TUBE
390464	1	WASHER NYLON 40/21/3
390465	1	JOINER BLOCK TRAPEEZE EAGLE
410185	1	BOLT HEX 8.8 DEL M6X16
410281	1	BOLT HEX 8.8 DEL M6X25 DIN933 A2
420604	1	BOLT HEX 8.8 DEL M10X25 FT DIN933
420663	1	BOLT HEX 8.8 DEL M10X120 A4-80
430323	1	BOLT HEX 8.8 DEL M12X60
430581	1	BOLT HEX 8.8 DEL M16X40 FT
430684	1	BOLT HEX 8.8 DEL M16X30 FT
430706	1	BOLT HEX 8.8 ZINC CLEAR M16X90
430846	1	BOLT HEX 8.8 DEL M12X80
430884	1	BOLT HEX 8.8 DEL M16X160
430910	1	BOLT HEX 8.8 DEL M20X110
430935	1	BOLT HM16-130/44 8.8 DAC DIN931
440644	1	SCREW NO.10 5/8"
440708	1	SCREW M5.5X16 SELF TAPPING SS
460261	1	NUT HEX M6X1.00 LOCK DIN985 A2 SS
460423	1	NUT HEX M10X1.50 LOCK DIN985A2 SS
460585	1	LOCKING NUT M16 DIN985 A2 SS
460703	1	NUT HEX M12X1.75 LOCK DIN985A2 SS
460806	1	NUT HEX M20X2.50 LOCK DIN985A2 SS
461249	1	NUT M22X1.5 DIN439B
471127	1	WASHER, M12, Ø24/13X24X2.5 SS
471129	1	WASHER, M20, Ø37/21.0X 3.0, SS
480384	1	PIN COTTER 3/16 x 1-1/2"
615213	1	PIN D22 X 70 LUBED F.EAGLE
615477	1	PIN F.HINGE 80/90'
615484	1	HOOK ASSY 80/90'
615497	1	PIN D22 X 159 LUBED F.EAGLE
615662	1	SAFETY BAR F. TILT 80-90'
636012	1	CABLE,CENTER 80/90 7mm X 870mm
637062	1	HOOK GUIDE EAGLE
637429	1	H FRAME 80/90'
637432	1	MOUNT LOWER H-FRAME 80'
637461	1	CABLE CENTER 80/90' 7mm x935mm
16056900	1	PLATE SPC EAGLE 80-100
22000403	1	SPRING SPC 100' CENTER SECTION
22000603	1	SPRING, COIL, SPC 80-90', RED
24262900	1	RUBBER STOP D50X40 M10X33
61008003	1	TRANSPORT HOOK CROSS BAR SPC-H
61010100	1	TRAPEZE ARM SPC 80-100

BOOM-SPC H-FRAME CTR.80-100 DK
D0420-HIN, 16:11:17

Date 12.08.2020 11:37

parts-n°	order qty	description
61010200	1	SPRING CAP SPC 80-100
63021600	1	SUSPENSION ARM SPC 80-100
63021800	1	SUSPENSION ARM SPC 80-100
63028800	1	CENTER PART H-FRAME 80/100'SPC
63051300	1	HINGE 80'-100' RH / SPC 05
63051400	1	HINGE 80'-100' LH / SPC 05
63051500	1	CENTER FRAME SPC 05
78120100	1	CYLINDER TELESC.65/40-1237

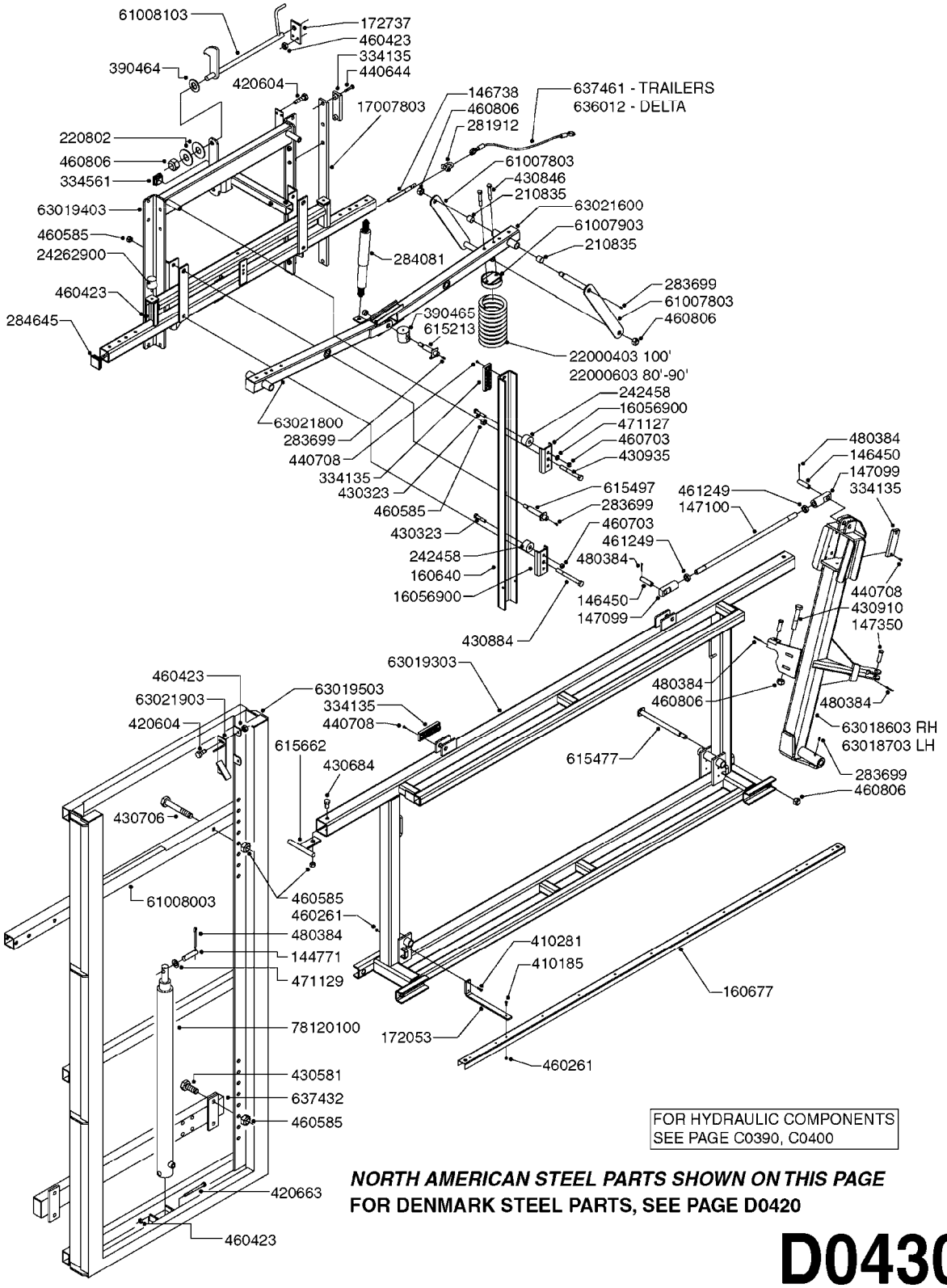

NORTH AMERICAN STEEL PARTS SHOWN ON THIS PAGE

FOR DENMARK STEEL PARTS, SEE PAGE D0420

D0430

Agroparts: www.HARDI-INTERNATIONAL.com

BOOM-SPC H-FRAME CTR.80-100 US
D0430-HIN, 16:11:17

Date 12.08.2020 11:37

parts-n°	order qty	description
144771	1	PIN D19.8 X 80
146450	1	PIN D19.8 X 75 WITH 2 X D5
146738	1	PIN FOR CENTER CABLE EAGLE
147099	1	CLEVIS F.TILT ARM
147100	1	ROD F.TILT 80/90'
147350	1	PIN D16.8 L60MM
160640	1	U CHANNEL 80/90'
160677	1	NOZZLE TRACK 80/90'
172053	1	NOZZLE TRACK HOLDER
172737	1	BRACKET F.HOOK LIFT 80/90'
210835	1	BUSHING D28/25 L=25
220802	1	BELLVILLE WASHER D50/D22.4X2
242458	1	BUSHING RUBBER DAMPER SPC EAG.
281912	1	SHACKLE M-10
283699	1	GREASE NIPPLE M6X1
284081	1	SHOCK ABSORBER 150 1121
284645	1	PLUG 60x60x2
334135	1	SLIDE SHOE 140X45X15
334561	1	PLUG 50x50x2 F.SQ.TUBE
390464	1	WASHER NYLON 40/21/3
390465	1	JOINER BLOCK TRAPEEZE EAGLE
410185	1	BOLT HEX 8.8 DEL M6X16
410281	1	BOLT HEX 8.8 DEL M6X25 DIN933 A2
420604	1	BOLT HEX 8.8 DEL M10X25 FT DIN933
420663	1	BOLT HEX 8.8 DEL M10X120 A4-80
430323	1	BOLT HEX 8.8 DEL M12X60
430581	1	BOLT HEX 8.8 DEL M16X40 FT
430684	1	BOLT HEX 8.8 DEL M16X30 FT
430706	1	BOLT HEX 8.8 ZINC CLEAR M16X90
430846	1	BOLT HEX 8.8 DEL M12X80
430884	1	BOLT HEX 8.8 DEL M16X160
430910	1	BOLT HEX 8.8 DEL M20X110
430935	1	BOLT HM16-130/44 8.8 DAC DIN931
440644	1	SCREW NO.10 5/8"
440708	1	SCREW M5.5X16 SELF TAPPING SS
460261	1	NUT HEX M6X1.00 LOCK DIN985 A2 SS
460423	1	NUT HEX M10X1.50 LOCK DIN985A2 SS
460585	1	LOCKING NUT M16 DIN985 A2 SS
460703	1	NUT HEX M12X1.75 LOCK DIN985A2 SS
460806	1	NUT HEX M20X2.50 LOCK DIN985A2 SS
461249	1	NUT M22X1.5 DIN439B
471127	1	WASHER, M12, Ø24/13X24X2.5 SS
471129	1	WASHER, M20, Ø37/21.0X 3.0, SS
480384	1	PIN COTTER 3/16 x 1-1/2"
615213	1	PIN D22 X 70 LUBED F.EAGLE
615477	1	PIN F.HINGE 80/90'
615497	1	PIN D22 X 159 LUBED F.EAGLE
615662	1	SAFETY BAR F. TILT 80-90'
636012	1	CABLE,CENTER 80/90 7mm X 870mm
637432	1	MOUNT LOWER H-FRAME 80'
637461	1	CABLE CENTER 80/90' 7mm x935mm
16056900	1	PLATE SPC EAGLE 80-100
17007803	1	SPACER SPC H-FRAME CENTER
22000403	1	SPRING SPC 100' CENTER SECTION
22000603	1	SPRING, COIL, SPC 80-90', RED
24262900	1	RUBBER STOP D50X40 M10X33
61007803	1	TRAPEZE BAR SPC CENTER
61007903	1	SPRING BASE SPC CENTER
61008003	1	TRANSPORT HOOK CROSS BAR SPC-H
61008103	1	TRANSPORT HOOK SPC-H
63018603	1	HINGE 80'-100' RH / SPC

parts-n°	order qty	description
63018703	1	HINGE 80'-100' LH / SPC
63019303	1	CENTER FRAME SPC
63019403	1	LIFT CENTER H-FRAME SPC
63019503	1	H-FRAME SPC
63021600	1	SUSPENSION ARM SPC 80-100
63021800	1	SUSPENSION ARM SPC 80-100
63021903	1	TRANSPORT HOOK DESIGNATOR
78120100	1	CYLINDER TELESC.65/40-1237

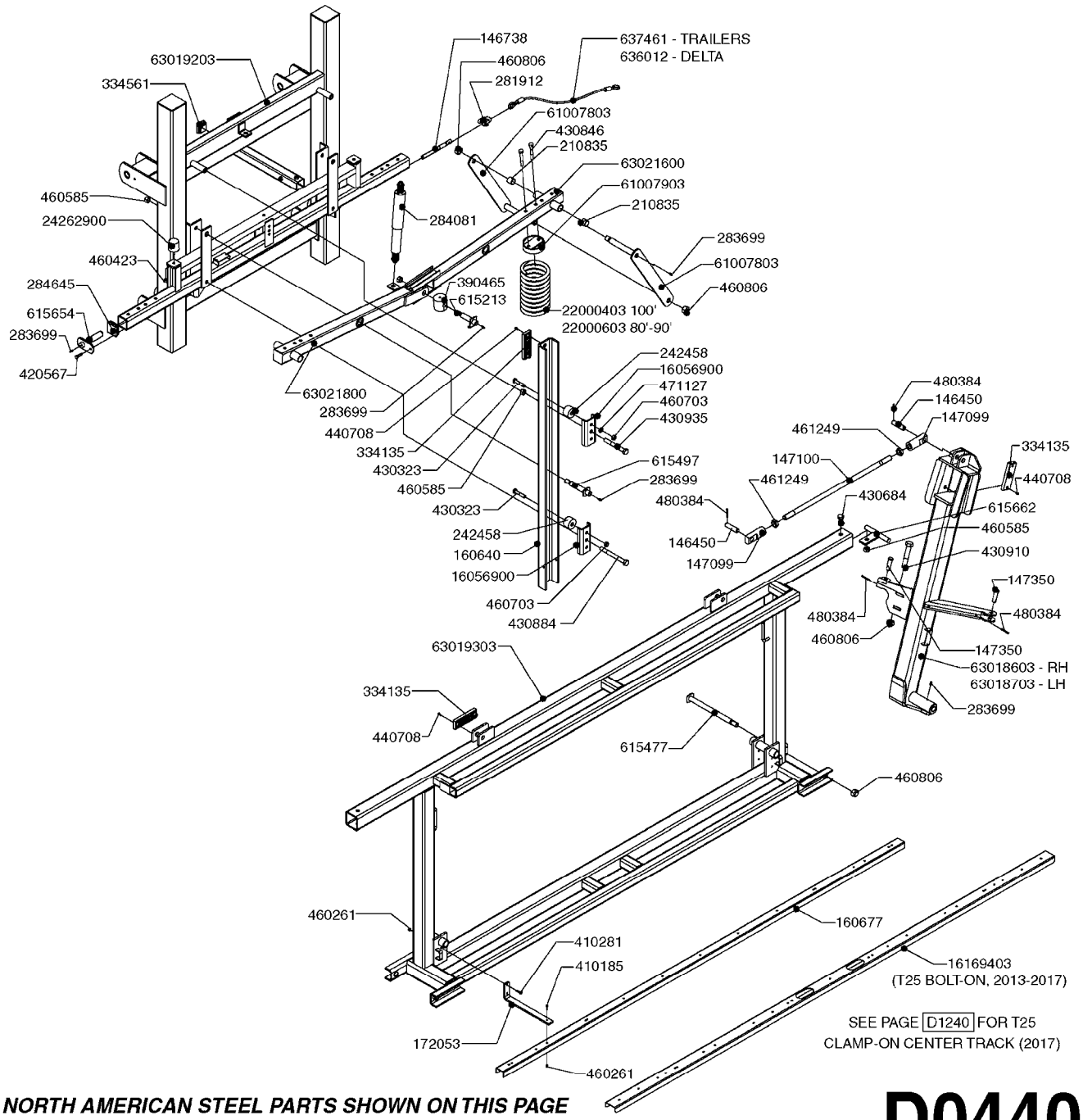

NORTH AMERICAN STEEL PARTS SHOWN ON THIS PAGE

FOR DENMARK STEEL PARTS, SEE PAGE D0390

D0440

Agroparts: www.HARDI-INTERNATIONAL.com

BOOM SPC PARAL.CTR.80-100' US
D0440-HIN, 26:09:19

Date 12.08.2020 11:37

parts-n°	order qty	description
146450	1	PIN D19.8 X 75 WITH 2 X D5
146738	1	PIN FOR CENTER CABLE EAGLE
147099	1	CLEVIS F.TILT ARM
147100	1	ROD F.TILT 80/90'
147350	1	PIN D16.8 L60MM
160640	1	U CHANNEL 80/90'
160677	1	NOZZLE TRACK 80/90'
172053	1	NOZZLE TRACK HOLDER
210835	1	BUSHING D28/25 L=25
242458	1	BUSHING RUBBER DAMPER SPC EAG.
281912	1	SHACKLE M-10
283699	1	GREASE NIPPLE M6X1
284081	1	SHOCK ABSORBER 150 1121
284645	1	PLUG 60x60x2
334135	1	SLIDE SHOE 140X45X15
334561	1	PLUG 50x50x2 F.SQ.TUBE
390465	1	JOINER BLOCK TRAPEEZE EAGLE
410185	1	BOLT HEX 8.8 DEL M6X16
410281	1	BOLT HEX 8.8 DEL M6X25 DIN933 A2
420567	1	BOLT HEX 8.8 DEL M8X30 FT
430323	1	BOLT HEX 8.8 DEL M12X60
430684	1	BOLT HEX 8.8 DEL M16X30 FT
430846	1	BOLT HEX 8.8 DEL M12X80
430884	1	BOLT HEX 8.8 DEL M16X160
430910	1	BOLT HEX 8.8 DEL M20X110
430935	1	BOLT HM16-130/44 8.8 DAC DIN931
440708	1	SCREW M5.5X16 SELF TAPPING SS
460261	1	NUT HEX M6X1.00 LOCK DIN985 A2 SS
460423	1	NUT HEX M10X1.50 LOCK DIN985A2 SS
460585	1	LOCKING NUT M16 DIN985 A2 SS
460703	1	NUT HEX M12X1.75 LOCK DIN985A2 SS
460806	1	NUT HEX M20X2.50 LOCK DIN985A2 SS
461249	1	NUT M22X1.5 DIN439B
471127	1	WASHER, M12, Ø24/13X24X2.5 SS
480384	1	PIN COTTER 3/16 x 1-1/2"
615213	1	PIN D22 X 70 LUBED F.EAGLE
615477	1	PIN F.HINGE 80/90'
615497	1	PIN D22 X 159 LUBED F.EAGLE
615654	1	PIN D25 X 123 F. PARALIFT
615662	1	SAFETY BAR F. TILT 80-90'
636012	1	CABLE,CENTER 80/90 7mm X 870mm
637461	1	CABLE CENTER 80/90' 7mm x935mm
16056900	1	PLATE SPC EAGLE 80-100
16169403	1	CENTER TRACK, SPC, 75-90' T25
22000403	1	SPRING SPC 100' CENTER SECTION
22000603	1	SPRING, COIL, SPC 80-90', RED
24262900	1	RUBBER STOP D50X40 M10X33
61007803	1	TRAPEZE BAR SPC CENTER
61007903	1	SPRING BASE SPC CENTER
63018603	1	HINGE 80'-100' RH / SPC
63018703	1	HINGE 80'-100' LH / SPC
63019203	1	PARA-LIFT LIFT CENTER SPC
63019303	1	CENTER FRAME SPC
63021600	1	SUSPENSION ARM SPC 80-100
63021800	1	SUSPENSION ARM SPC 80-100

HARDI	**Agroparts: www.HARDI-INTERNATIONAL.com**	
	BOOM CABLE KIT SPC 80'-90' D0450-HIN, 01:01:16	Page 0
		Date 12.08.2020 11:37

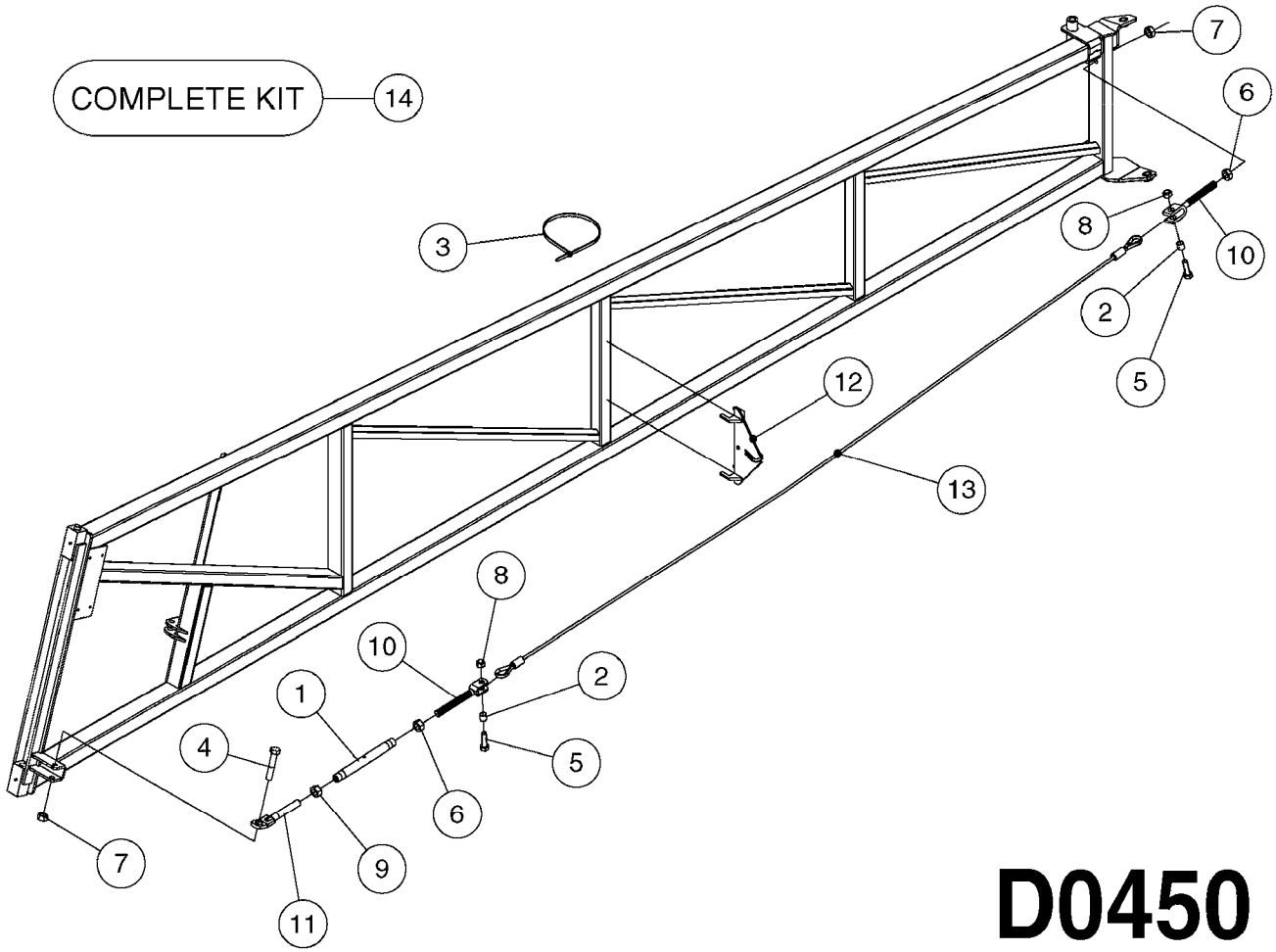

D0450

Agroparts: www.HARDI-INTERNATIONAL.com

BOOM CABLE KIT SPC 80'-90'
D0450-HIN, 01:01:16

Date 12.08.2020 11:37

Pos.	parts-nº	order qty	description
1	151473	1	TURN BUCKLE HOUSING M16-200
2	159851	1	BUSHING Ø16.0/13.0 L=16 DEL
3	28025203	1	TIE STRAP L=23" x W=1/2"
4	430706	1	BOLT HEX 8.8 ZINC CLEAR M16X90
5	430721	1	BOLT HEX 8.8 DEL M12X40 FT
6	460327	1	NUT HEX M16X2
7	460585	1	LOCKING NUT M16 DIN985 A2 SS
8	460703	1	NUT HEX M12X1.75 LOCK DIN985A2 SS
9	461230	1	NUT HEX M16X2 LH THREAD
10	615561	1	CLEVIS F.TURNBUCKLE M16 RH
11	615774	1	ANCHOR LH F.M16 TURNBUCKLE
12	63028603	1	BRACE, CABLE INNER SPC
13	63028703	1	CABLE Ø10 X 4750 / SPC
14	83347603	1	SPC 80-90 CABLE KIT, IN-FIELD

	Agroparts: www.HARDI-INTERNATIONAL.com	
HARDI	BOOM SPC OUTER 90/60' DUALFOLD D0460-HIN, 28:04:20	Page 0 Date 12.08.2020 11:37

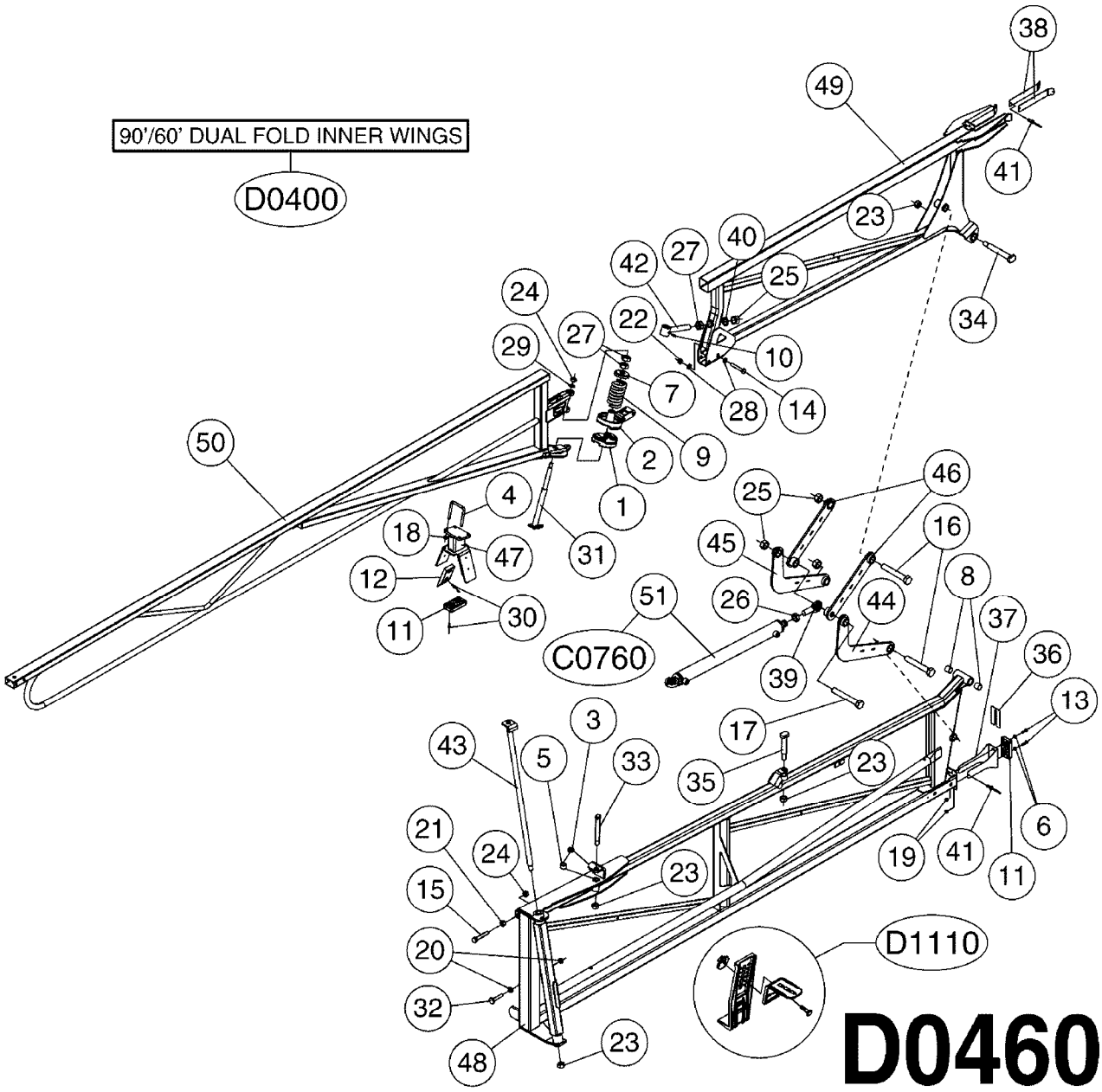

Agroparts: www.HARDI-INTERNATIONAL.com

BOOM SPC OUTER 90/60' DUALFOLD
D0460-HIN, 28:04:20

Date 12.08.2020 11:37

Pos.	parts-n°	order qty	description
1	111344	1	CLAW CLUTCH Ø100/Ø20,5 UNDER PART RED
2	111640	1	CLAW CLUTCH Ø100 TOP PART RED
3	145912	1	BUSHING D19.8/D17.0X7MM
4	146629	1	BOLT U M8 F. 60 X 40
5	147562	1	BUSHING D19.8/17.0 L=15
6	163936	1	WASHER D15/D6.2X1
7	166246	1	WASHER CUP D53 F.SPRING
8	210859	1	BUSH Ø23X20 L20
9	220771	1	SPRING D53/D43X100
10	283699	1	GREASE NIPPLE M6X1
11	334603	1	RUBBER STOP 86X48X15
12	390826	1	SLIDE PAD F.TRANSPORT BKT.CM/D
13	410362	1	BOLT HEX 8.8 SS M6X20
14	421083	1	BOLT HEX 8.8 DEL M10X65
15	430874	1	SCREW SET 8.8 DEL M12X70 FT
16	430888	1	BOLT HEX 8.8 DEL M20X130
17	430979	1	BOLT HEX M20x140 8.8 DELTA
18	460143	1	LOCK NUT M8 SST A2 DIN985
19	460261	1	NUT HEX M6X1.00 LOCK DIN985 A2 SS
20	460342	1	NUT HEX M10 DEL DIN934
21	460386	1	NUT HEX M12X1.75
22	460423	1	NUT HEX M10X1.50 LOCK DIN985A2 SS
23	460585	1	LOCKING NUT M16 DIN985 A2 SS
24	460703	1	NUT HEX M12X1.75 LOCK DIN985A2 SS
25	460806	1	NUT HEX M20X2.50 LOCK DIN985A2 SS
26	461200	1	NUT HEX M20X1.5 JAMB.
27	461251	1	NUT HEX M20 X 2.5 JAMB
28	471122	1	WASHER, M10, Ø20/10.5X 2.0, SS
29	471127	1	WASHER, M12, Ø24/13X24X2.5 SS
30	480804	1	RIVET Ø4.8x14.5
31	615819	1	PIN
32	14011800	1	BOLT HEX DEL M10X60 SPECIAL
33	14016600	1	PIN F. LINK ARM / SPC
34	14107600	1	PIN, Ø20 F. 90/60 FOLD
35	14107700	1	PIN, Ø19.8 F. 90/60 CYLINDER
36	16329900	1	SHIM, SS, LEVELING, 90/60
			OPTIONAL (AS NEEDED)
37	16339400	1	WEAR PLATE, SS, 1.OUTER, 90/60
38	16339500	1	WEAR PLATE, SS, 2.OUTER, 90/60
39	21092100	1	LINK HEAD M20 x D20 L=73, DELTA
40	47001103	1	WASHER D20.5/D33X4 LOCK
41	48000503	1	RIVET Ø3.2X10, STAINLESS
42	61006200	1	ADJ. ARM F.BREAKAWAY FTZ
43	61010700	1	PIN F.HINGE 80-90'/SPC L=664
44	61066100	1	FOLDING ARM,90/60,1.OUT"A"
45	61066300	1	FOLDING ARM,90/60,1.OUT"B"
46	61066500	1	FOLDING ARM,90/60,2.OUTER
47	61066700	1	BOOM REST, 90/60, 2.OUTER
48	63107300	1	BOOM, 90/60, 1.OUTER, RH
48	63112700	1	BOOM, 90/60, 1.OUTER, LEFT
49	63107500	1	BOOM, 90/60, 2.OUTER
50	63825000	1	BREAKAWAY FTZ/SPC 3.0M, RED
51	78127200	1	CYLINDER DOUB. D40/25 L=455

HARDI	**Agroparts: www.HARDI-INTERNATIONAL.com**	
	BOOM SPC CENTER 120/90' D0470-HIN, 07:02:19	Page 0 Date 12.08.2020 11:37

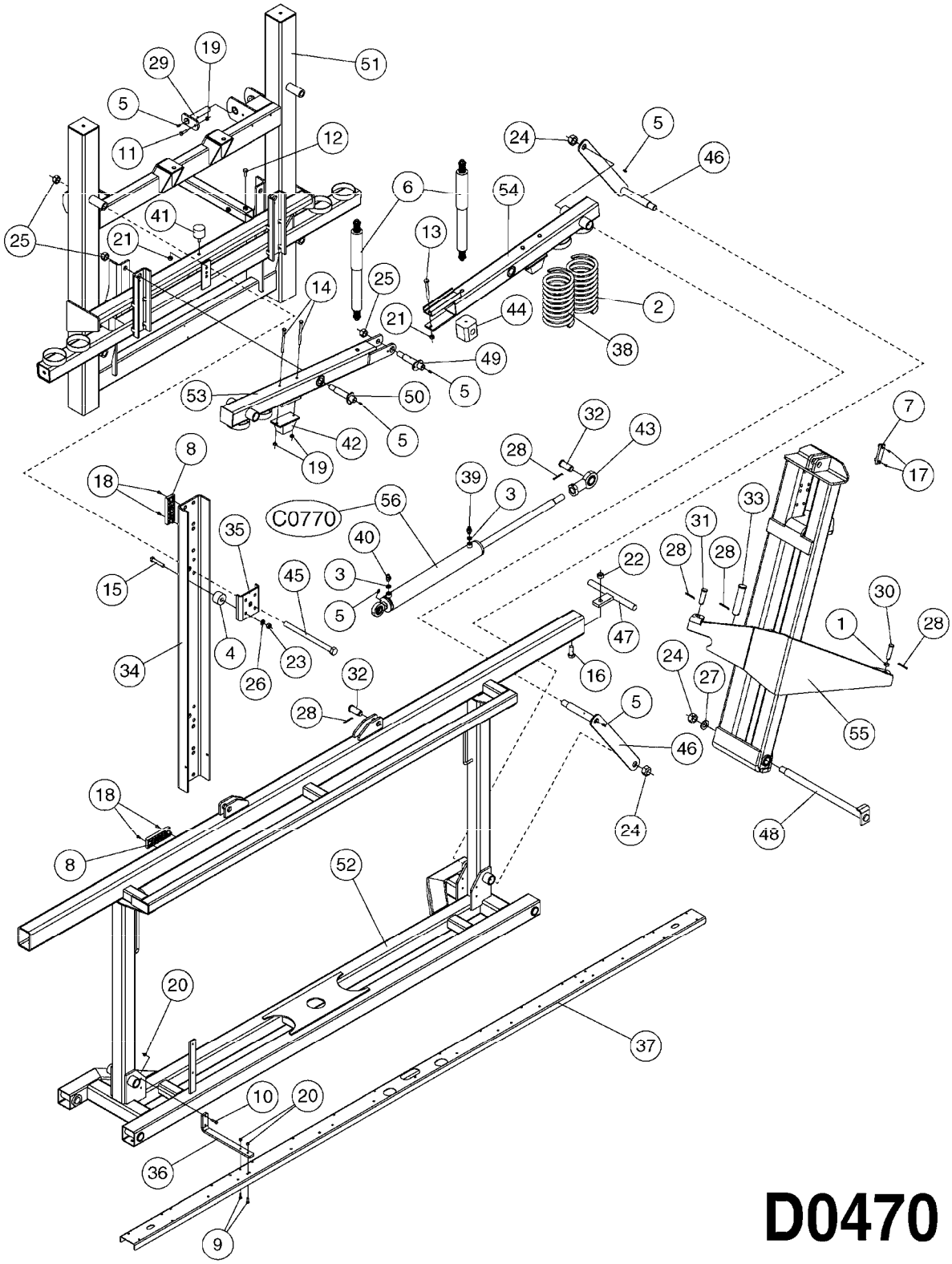

D0470

Agroparts: www.HARDI-INTERNATIONAL.com

BOOM SPC CENTER 120/90'
D0470-HIN, 07:02:19

Date 12.08.2020 11:37

Pos.	parts-n°	order qty	description
1	147562	1	BUSHING D19.8/17.0 L=15
2	220867	1	COMP SPRING DI106 L320 D14 N9,55
3	241404	1	DOWTY SEAL 1/4"
4	242458	1	BUSHING RUBBER DAMPER SPC EAG.
5	283699	1	GREASE NIPPLE M6X1
6	284081	1	SHOCK ABSORBER 150 1121
7	333956	1	SLIDE SHOE 91X25X10
8	334135	1	SLIDE SHOE 140X45X15
9	410362	1	BOLT HEX 8.8 SS M6X20
10	410686	1	BOLT HEX 8.8 DEL M6X30
11	420567	1	BOLT HEX 8.8 DEL M8X30 FT
12	420604	1	BOLT HEX 8.8 DEL M10X25 FT DIN933
13	421061	1	BOLT HEX 8.8 DEL M10X100 DIN931
14	421232	1	BOLT HEX 8.8 DEL M8X110
15	430438	1	BOLT HEX 8.8 DEL M12X65
16	430581	1	BOLT HEX 8.8 DEL M16X40 FT
17	440665	1	SCREW M4.2X16 STAINLESS
18	440708	1	SCREW M5.5X16 SELF TAPPING SS
19	460143	1	LOCK NUT M8 SST A2 DIN985
20	460261	1	NUT HEX M6X1.00 LOCK DIN985 A2 SS
21	460423	1	NUT HEX M10X1.50 LOCK DIN985A2 SS
22	460585	1	LOCKING NUT M16 DIN985 A2 SS
23	460703	1	NUT HEX M12X1.75 LOCK DIN985A2 SS
24	460747	1	NUT HEX M24 LOCK
25	460806	1	NUT HEX M20X2.50 LOCK DIN985A2 SS
26	471127	1	WASHER, M12, Ø24/13X24X2.5 SS
27	471130	1	WASHER, M24, Ø44/25.0X 4.0, SS
28	480384	1	PIN COTTER 3/16 x 1-1/2"
29	615654	1	PIN D25 X 123 F. PARALIFT
30	14018703	1	PIN, Ø16.8, L=67
31	14018803	1	PIN, Ø19.8, L=67
32	14018903	1	PIN, Ø24.8, L=65
33	14019003	1	PIN, Ø29.8, L=117
34	16154403	1	PLATE, 5/16", 1484X240, FOLDED
35	16154503	1	PLATE, 1/4", 147X130, FOLDED
36	16161703	1	BRACKET, NOZ.TRACK MT, SPC 120
37	16189703	1	CENTER TRACK 2014, TDZ/SPC
38	22000603	1	SPRING, COIL, SPC 80-90', RED
39	23234500	1	HEX NIPPLE 1/4" - 9/16"
40	23234700	1	HEX NIPPLE 1/4"-9/16" - 0.7mm
41	24262900	1	RUBBER STOP D50X40 M10X33
42	24267600	1	RUBBERSTOP 15/238 T=56 SS
43	28115000	1	LINK HEAD M24 X 2 X Ø25
44	39003003	1	TRAPEZE JOINTER BLK,120/90'SPC
45	43001103	1	BOLT HEX 8.8 DEL M20X290
46	61016603	1	TRAPEZE ARM, 120/90' SPC
47	61016803	1	CATCH-BRACKET, 120/90' SPC
48	61017203	1	MAIN HINGE PIN, 120/90' SPC
49	61017403	1	CENTER PIVOT PIN, 120/90' SPC
50	61017503	1	TRAPEZE PIVOT PIN, 120/90' SPC
51	63036003	1	PARALIFT LIFT CTR,120/90'SPC
52	63036103	1	CENTER FRAME, 120/90' SPC
53	63036703	1	TRAPEZE ARM RH, 120/90' SPC
54	63036803	1	TRAPEZE ARM LH, 120/90' SPC
55	70091103	1	RH HINGE, 120/90' SPC
55	70091203	1	LH HINGE, 120/90' SPC
56	78131000	1	CYLINDER, 60/30X462, 120' SPC

	Agroparts: www.HARDI-INTERNATIONAL.com	
HARDI	BOOM SPC INNER 120/90'DUALFOLD D0480-HIN, 08:05:19	Page 0 Date 12.08.2020 11:37

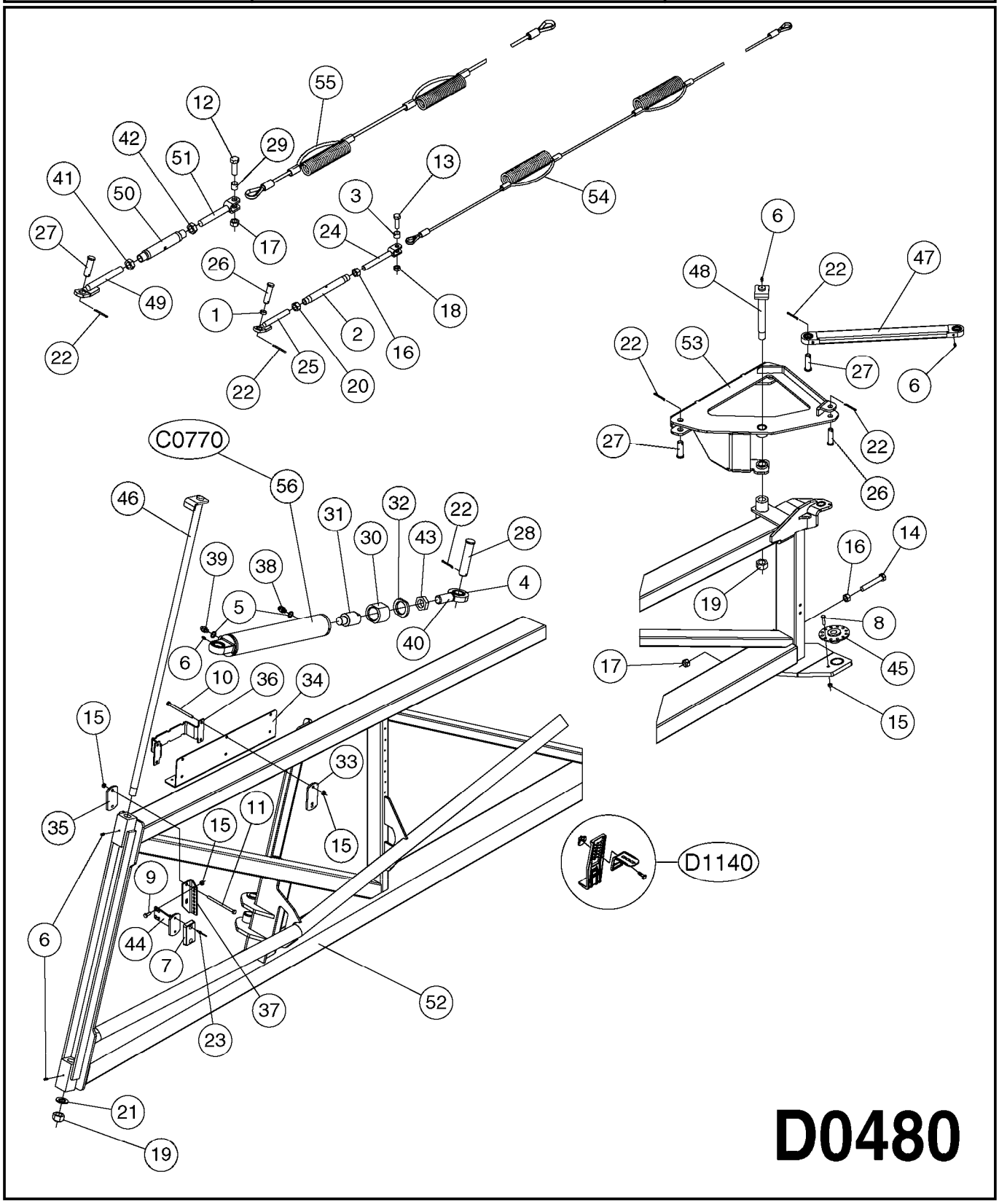

Agroparts: www.HARDI-INTERNATIONAL.com

BOOM SPC INNER 120/90'DUALFOLD
D0480-HIN, 08:05:19

Date 12.08.2020 11:37

Pos.	parts-n°	order qty	description
1	147562	1	BUSHING D19.8/17.0 L=15
2	151473	1	TURN BUCKLE HOUSING M16-200
3	159851	1	BUSHING Ø16.0/13.0 L=16 DEL
4	210873	1	BEARING LINKHEAD D30
5	241404	1	DOWTY SEAL 1/4"
6	283699	1	GREASE NIPPLE M6X1
7	334603	1	RUBBER STOP 86X48X15
8	420567	1	BOLT HEX 8.8 DEL M8X30 FT
9	420582	1	BOLT HEX 8.8 DEL M8X20 FT A2
10	421229	1	BOLT HEX 8.8 DEL M8x120
11	421256	1	BOLT HEX 8.8 SS M8X130
12	430637	1	BOLT HEX 8.8 DEL M16X50 FT
13	430721	1	BOLT HEX 8.8 DEL M12X40 FT
14	430861	1	BOLT HEX 8.8 DEL M16X100 FT
15	460143	1	LOCK NUT M8 SST A2 DIN985
16	460327	1	NUT HEX M16X2
17	460585	1	LOCKING NUT M16 DIN985 A2 SS
18	460703	1	NUT HEX M12X1.75 LOCK DIN985A2 SS
19	460747	1	NUT HEX M24 LOCK
20	461230	1	NUT HEX M16X2 LH THREAD
21	471130	1	WASHER, M24, Ø44/25.0X 4.0, SS
22	480384	1	PIN COTTER 3/16 x 1-1/2"
23	480804	1	RIVET Ø4.8x14.5
24	615561	1	CLEVIS F.TURNBUCKLE M16 RH
25	615774	1	ANCHOR LH F.M16 TURNBUCKLE
26	14018703	1	PIN, Ø16.8, L=67
27	14018803	1	PIN, Ø19.8, L=67
28	14019003	1	PIN, Ø29.8, L=117
29	14019903	1	BUSHING D20/D17X20
30	14109600	1	BUSHING M48 X 2
31	14109700	1	ADAPTOR F. HYD. CYL.
32	14109800	1	NUT M48 X 2
33	16092803	1	PLATE F. TRANSPORT CM+
34	16155703	1	BRKT, 6 INLINE FILTERS
35	16164603	1	PLATE,FLAT,1/4",98X51
36	16165003	1	BRKT, SPC T25 FEED HOSE TIE-DOWN
37	16169603	1	BRKT MOUNT, BOOM STOP, 120' SPC
38	23234500	1	HEX NIPPLE 1/4" - 9/16"
39	23234700	1	HEX NIPPLE 1/4"-9/16" - 0.7mm
40	28113000	1	LINKEYE Ø30 M30 X 2
41	46001503	1	NUT, HEX M20 X 2.5, L.THREAD
42	46001603	1	NUT, HEX M20 X 2.5, R.THREAD
43	46133400	1	NUT HEX M30x2.0
44	61007003	1	BOOM STOP HPZ/FTZ L=95/75
45	61016403	1	FOLD CORRECTION CAM,120/90'SPC
46	61017103	1	INNER WING PIN, 120/90' SPC
47	61017603	1	FOLDING ARM, 120/90' SPC
48	61017803	1	MECHANISM MAIN PIN,120/90' SPC
49	61018303	1	ADJ SCREW M20, 120/90' SPC
50	61018403	1	HOUSE M20, 120/90' SPC
51	61018503	1	FORK,SCREW M20,120/90' SPC
52	63035403	1	RIGHT INNER WING, 120/90' SPC
52	63036403	1	LEFT INNER WING, 120/90' SPC
53	63035703	1	RH FOLD MECHANISM, 120/90' SPC
53	63037703	1	LH FOLD MECHANISM, 120/90' SPC
54	63143100	1	CABLE, REAR, 120/90' SPC
55	63143200	1	CABLE, FRONT, 120/90' SPC
56	78131100	1	HY. CYLINDER, 70/40X400

	Agroparts: www.HARDI-INTERNATIONAL.com	
HARDI	BOOM SPC OUTER 120/90'DUALFOLD D0490-HIN, 11:10:17	Page 0 Date 12.08.2020 11:37

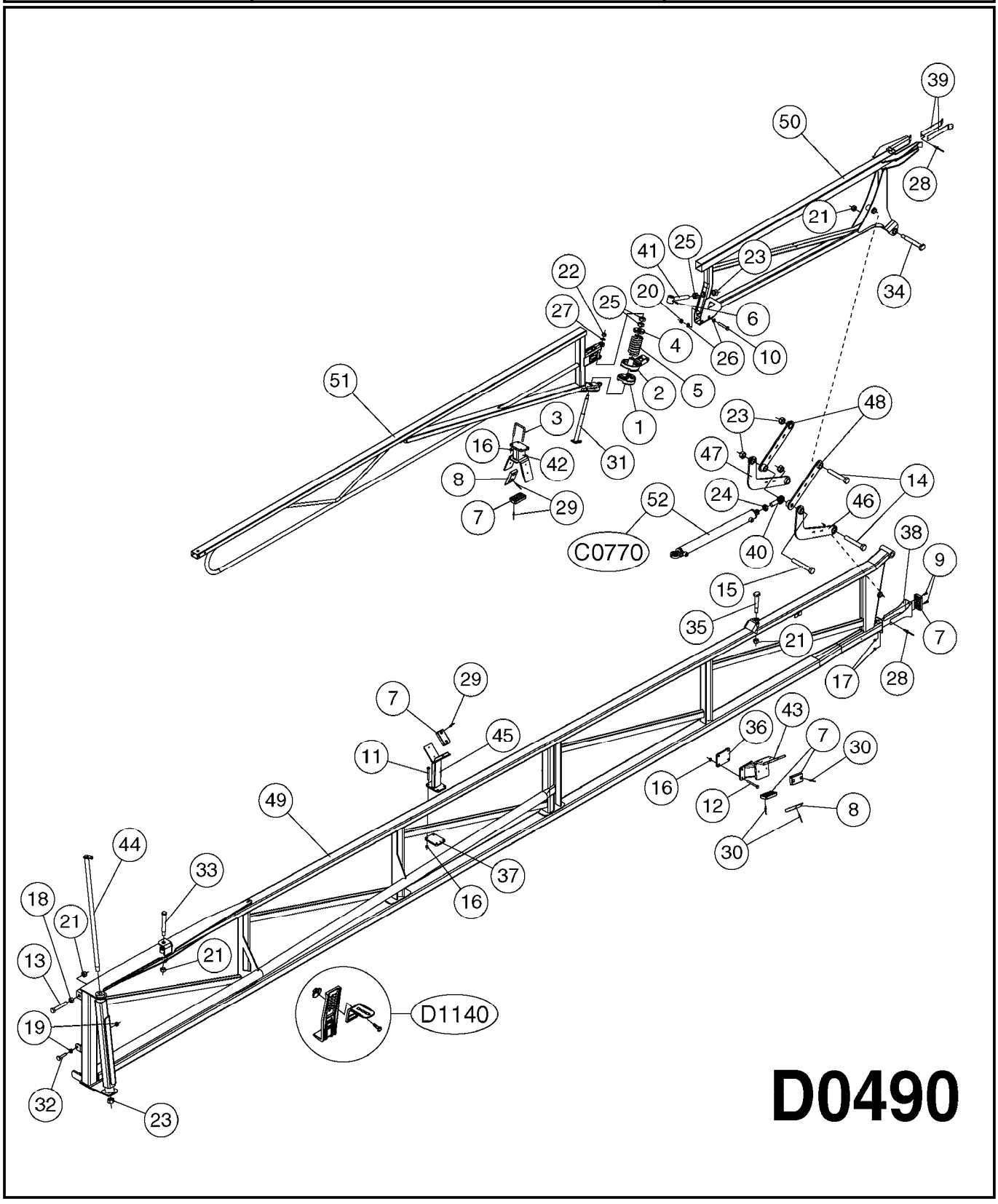

Agroparts: www.HARDI-INTERNATIONAL.com

BOOM SPC OUTER 120/90'DUALFOLD
D0490-HIN, 11:10:17

Date 12.08.2020 11:37

Pos.	parts-n°	order qty	description
1	111344	1	CLAW CLUTCH Ø100/Ø20,5 UNDER PART RED
2	111640	1	CLAW CLUTCH Ø100 TOP PART RED
3	146629	1	BOLT U M8 F. 60 X 40
4	166246	1	WASHER CUP D53 F.SPRING
5	220771	1	SPRING D53/D43X100
6	283699	1	GREASE NIPPLE M6X1
7	334603	1	RUBBER STOP 86X48X15
8	390826	1	SLIDE PAD F.TRANSPORT BKT.CM/D
9	410362	1	BOLT HEX 8.8 SS M6X20
10	421083	1	BOLT HEX 8.8 DEL M10X65
11	421201	1	BOLT HEX 8.8 DEL M8X70
12	421255	1	BOLT HEX 8.8 SS M8X75
13	430861	1	BOLT HEX 8.8 DEL M16X100 FT
14	430888	1	BOLT HEX 8.8 DEL M20X130
15	430979	1	BOLT HEX M20x140 8.8 DELTA
16	460143	1	LOCK NUT M8 SST A2 DIN985
17	460261	1	NUT HEX M6X1.00 LOCK DIN985 A2 SS
18	460327	1	NUT HEX M16X2
19	460342	1	NUT HEX M10 DEL DIN934
20	460423	1	NUT HEX M10X1.50 LOCK DIN985A2 SS
21	460585	1	LOCKING NUT M16 DIN985 A2 SS
22	460703	1	NUT HEX M12X1.75 LOCK DIN985A2 SS
23	460806	1	NUT HEX M20X2.50 LOCK DIN985A2 SS
24	461200	1	NUT HEX M20X1.5 JAMB.
25	461251	1	NUT HEX M20 X 2.5 JAMB
26	471122	1	WASHER, M10, Ø20/10.5X 2.0, SS
27	471127	1	WASHER, M12, Ø24/13X24X2.5 SS
28	480800	1	RIVET Ø3.2X10
29	480804	1	RIVET Ø4.8x14.5
30	480816	1	RIVET Ø4.8X19.0/Ø14
31	615819	1	PIN
32	14011800	1	BOLT HEX DEL M10X60 SPECIAL
33	14019203	1	PIN, Ø19.8, L=144
34	14107600	1	PIN, Ø20 F. 90/60 FOLD
35	14107700	1	PIN, Ø19.8 F. 90/60 CYLINDER
36	16155103	1	PLATE, 5/16", 100X81, FLAT
37	16157603	1	PLATE, 5/16", 94X70, FLAT
38	16339400	1	WEAR PLATE, SS, 1.OUTER, 90/60
39	16339500	1	WEAR PLATE, SS, 2.OUTER, 90/60
40	21092100	1	LINK HEAD M20 x D20 L=73, DELTA
41	61006200	1	ADJ. ARM F.BREAKAWAY FTZ
42	61016503	1	2.OUTER BOOM REST, 120/90' SPC
43	61017003	1	RH 1.OUTER BM REST,120/90'SPC
44	61017303	1	OUTER PIN, 120/90' SPC
45	61017703	1	90/60 BREAKAWAY REST,120/90'
46	61066100	1	FOLDING ARM,90/60,1.OUT"A"
47	61066300	1	FOLDING ARM,90/60,1.OUT"B"
48	61066500	1	FOLDING ARM,90/60,2.OUTER
49	63035303	1	RT 1.OUTER WING, 120/90' SPC
49	63036303	1	LT 1.OUTER WING, 120/90' SPC
50	63107500	1	BOOM, 90/60, 2.OUTER
51	63825000	1	BREAKAWAY FTZ/SPC 3.0M, RED
52	78127200	1	CYLINDER DOUB. D40/25 L=455

	Agroparts: www.HARDI-INTERNATIONAL.com	
HARDI	SPC PLUMB.BRACKETS - T25 D0500-HIN, 21:02:17	Page 0 Date 12.08.2020 11:37

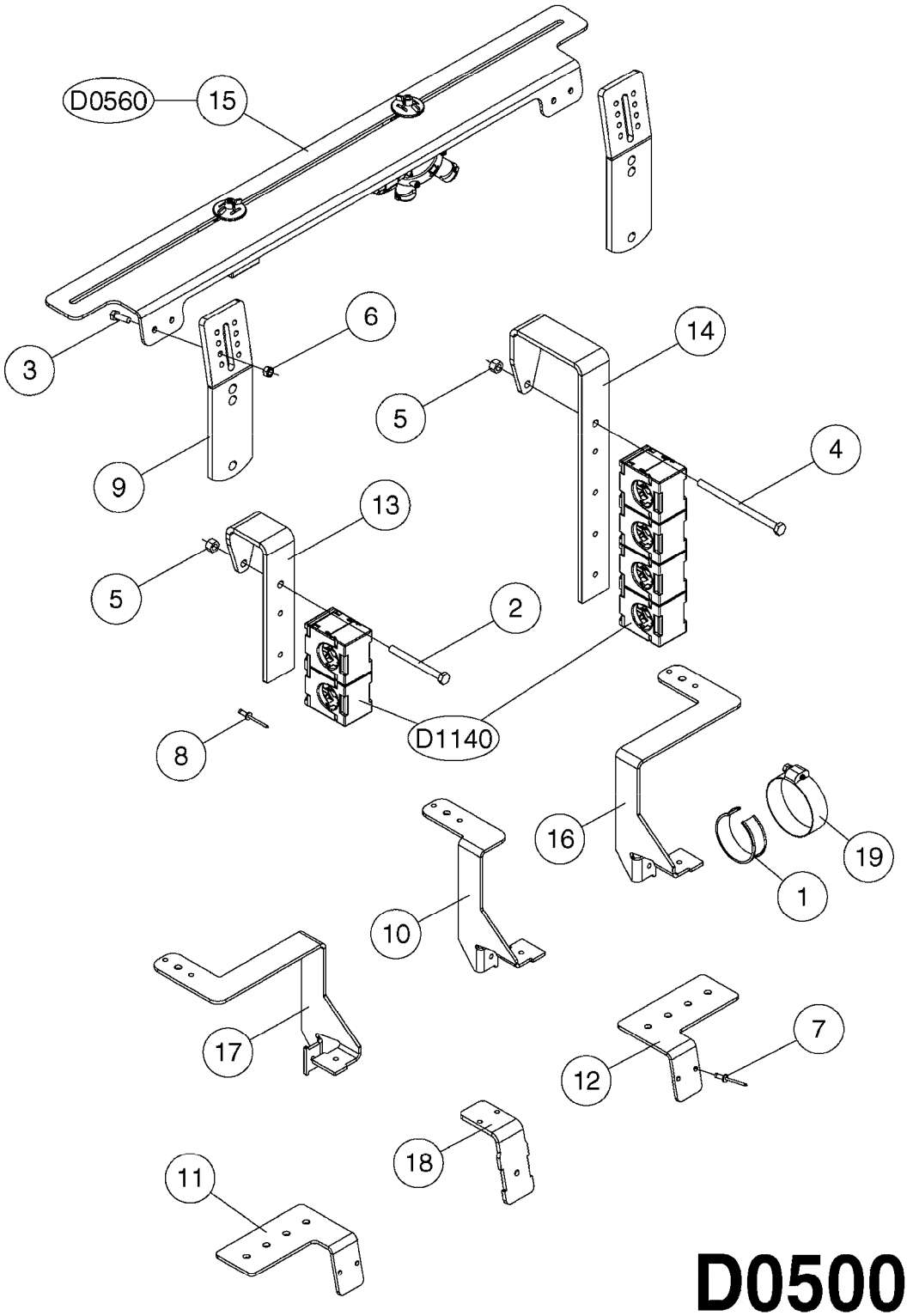

D0500

Agroparts: www.HARDI-INTERNATIONAL.com

SPC PLUMB.BRACKETS - T25
D0500-HIN, 21:02:17

Date 12.08.2020 11:37

Pos.	parts-nº	order qty	description
1	341291	1	RUBBER HOSE CLAMP COVER 130MM
2	410384	1	BOLT HEX 8.8 DEL M6X65
3	410406	1	BOLT HEX 8.8 DEL M5X16 FT
4	410524	1	BOLT HEX 8.8 DEL M6X100
5	460261	1	NUT HEX M6X1.00 LOCK DIN985 A2 SS
6	461217	1	NUT HEX M5 LOCK
7	480783	1	RIVET Ø4x14, GR 7.9-9.5 ALUM
8	480804	1	RIVET Ø4.8x14.5
9	16109303	1	PLATE F. TRANSPORT REST CM
10	16110803	1	NOZZLE BRACKET VAR SPACINGS
11	16162503	1	BRACKET,NOZZLE OFFSET,R,BLACK
12	16163003	1	BRACKET,NOZZLE OFFSET,L,BLACK
13	16164803	1	BRACKET, T25 FEEDTUBE HANG
14	16166203	1	BRACKET, T25 FEED TUBE HANG 80X60
15	16183403	1	BRACKET, TRANSPORT BAR NOZ SPC, RED
16	16183603	1	BRACKET, NOZZLE OFFSET, LH, RED
17	16183803	1	BRACKET, NOZZLE OFFSET, RH, RED
18	16380800	1	BRACKET, NOZZLE DUMMY, T25
19	28047003	1	CLAMP HOSE GEAR 30 X 50 6732

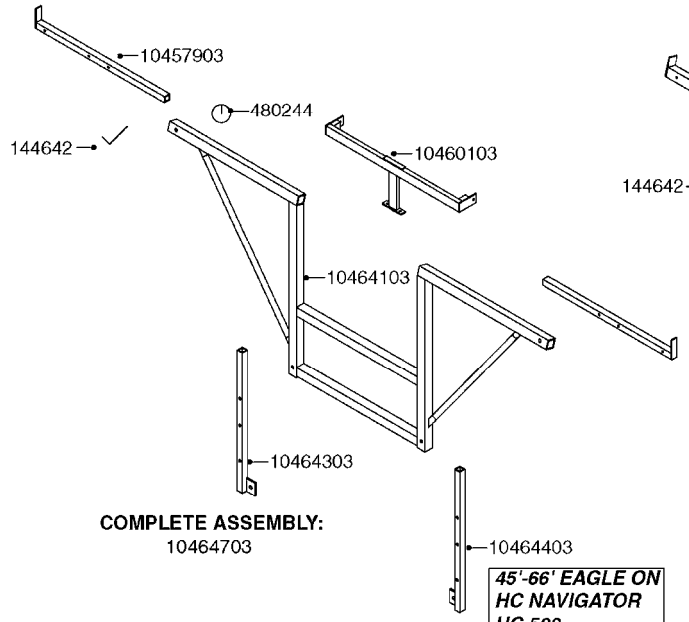

COMPLETE ASSEMBLY:
10464703

45'-66' EAGLE ON
HC NAVIGATOR
HC 500
HC 800
HC 1000

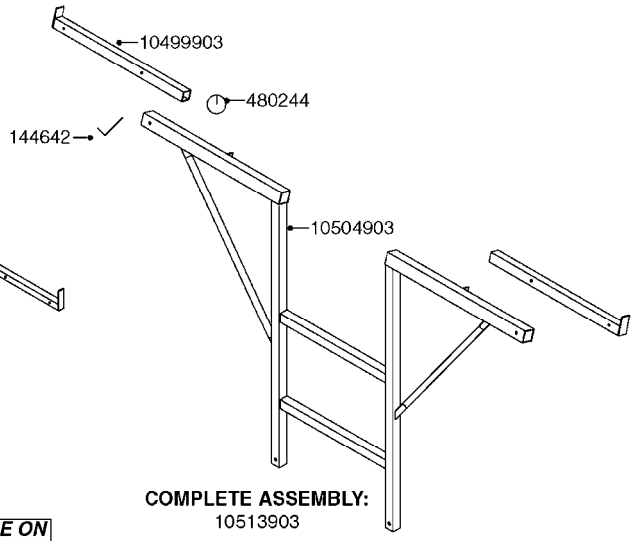

COMPLETE ASSEMBLY:
10513903

80'-90' EAGLE ON
NAVIGATOR TA & HC

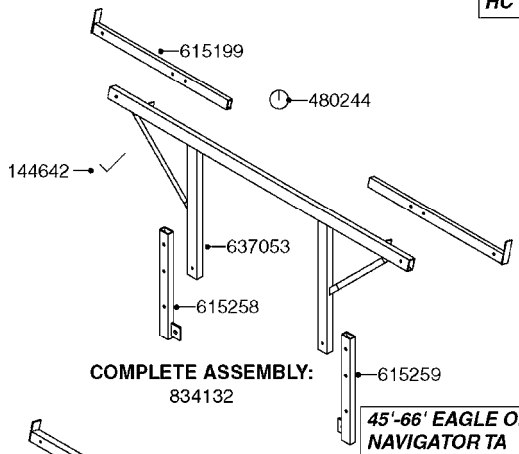

COMPLETE ASSEMBLY:
834132

45'-66' EAGLE ON
NAVIGATOR TA
TR 500 TA
TR 800 TA
TR 1000 TA

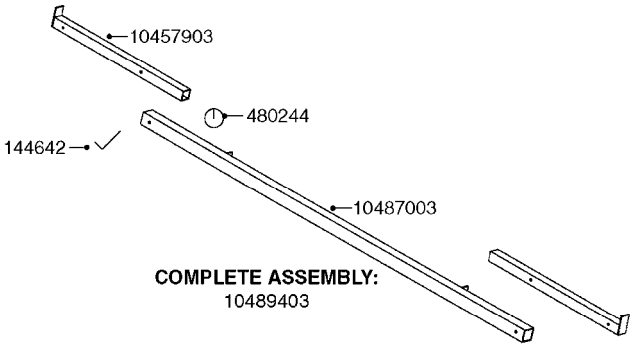

COMPLETE ASSEMBLY:
10489403

45'-66' EAGLE
ON HC 650M/ 950M

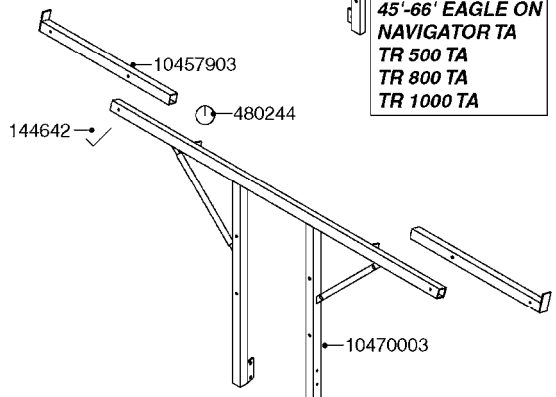

COMPLETE ASSEMBLY:
10458703

HC 500/ 650

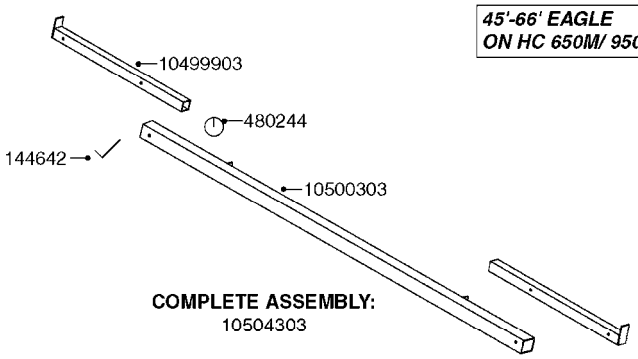

COMPLETE ASSEMBLY:
10504303

80'-90' EAGLE
ON HC 650M/ 950M

COMPLETE ASSEMBLIES
WHOLEGOODS ITEMS

D0510

Agroparts: www.HARDI-INTERNATIONAL.com

TRANSPORT BRACKETS-EAGLE BOOM
D0510-HIN, 01:01:16

Date 12.08.2020 11:37

parts-n°	order qty	description
10457903	1	TRANSPORT ARM NAV.45-66'EAG
10458703	1	TRANSPORT BDL.HC650 EAGLE
10460103	1	HOOK LIFT BKT.F.NAV 45-66'
10464103	1	TRANS.BKT.NAV550/800/1000 EAG
10464303	1	TUBE F.TRANS.NAV550/800/1000RH
10464403	1	TUBE F.TRANS.NAV550/800/1000LH
10464703	1	TRANS.BDL.EAG.45-66 NAVM HC
10470003	1	FRONT TRANS.HC650 EAGLE (NEW)
10487003	1	TRANSPORT W/M HC950 EAGLE
10489403	1	TRANSPORT BDL.HC950 EAGLE
10499903	1	TRANSPORT ARM NAV 80/90'EAG
10500303	1	TRANSPORT W/M HC950 80/90'EAG
10504303	1	TRANSPORT KIT HC950 80/90'EAG
10504903	1	TRANSPORT BKT.NAV8/1000 80-90'
10513903	1	TRANS.BDL.80/90 NAV.800/1000
144642	1	LOCKING PAWL D10X65MM
480244	1	PIN SNAP D4.5
615199	1	TRANSPORT SLIDE ARM F.TA EAGLE
615258	1	TRANS.MOUNT BKT.LH TA EAGLE
615259	1	TRANS.MOUNT BKT.RH TA EAGLE
637053	1	TRANSPORT BRACKET F.TA EAGLE
834132	1	TRANS.EAG 45/66 TR500/NAV TA

	Agroparts: www.HARDI-INTERNATIONAL.com	
HARDI	TRANS.BRKTS-SPB NEW NAV PRE03 D0520-HIN, 01:01:16	Page 0 Date 12.08.2020 11:37

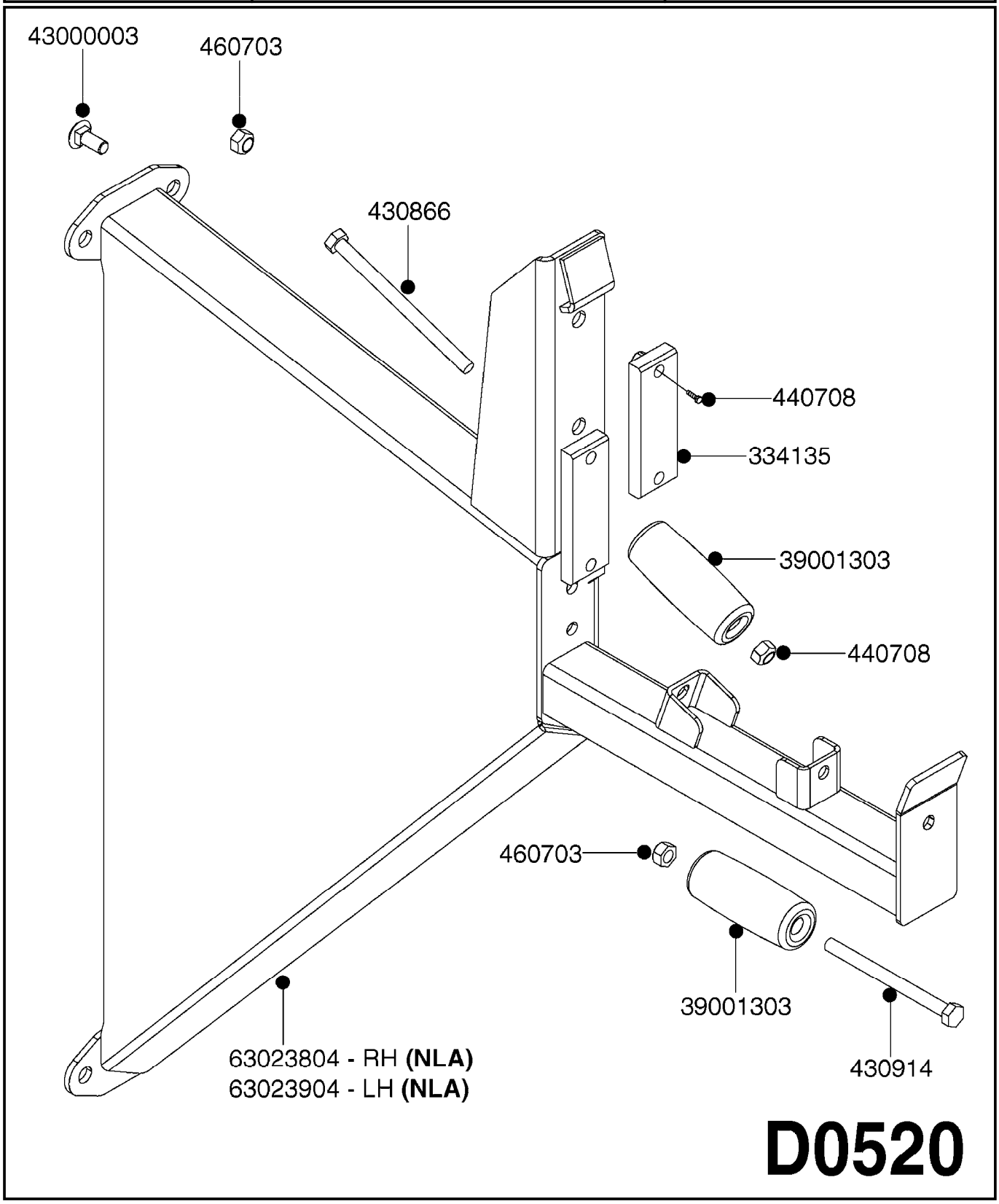

Agroparts: www.HARDI-INTERNATIONAL.com

TRANS.BRKTS-SPB NEW NAV PRE03
D0520-HIN, 01:01:16

Date 12.08.2020 11:37

parts-n°	order qty	description
334135	1	SLIDE SHOE 140X45X15
39001303	1	TRANSPORT ROLLER
43000003	1	BOLT HEX 8.8 CARRIAGE M12x40
430866	1	BOLT HEX 8.8 DEL M12X170
430914	1	BOLT HEX 8.8 DEL M12X150
440708	1	SCREW M5.5X16 SELF TAPPING SS
460703	1	NUT HEX M12X1.75 LOCK DIN985A2 SS
63023804	1	TRANSPORT SPC RH
63023904	1	TRANSPORT SPC LH

	Agroparts: www.HARDI-INTERNATIONAL.com	
HARDI	TRANS.BKTS SPB/C NEW NAV 03 D0530-HIN, 01:01:16	Page 0 Date 12.08.2020 11:37

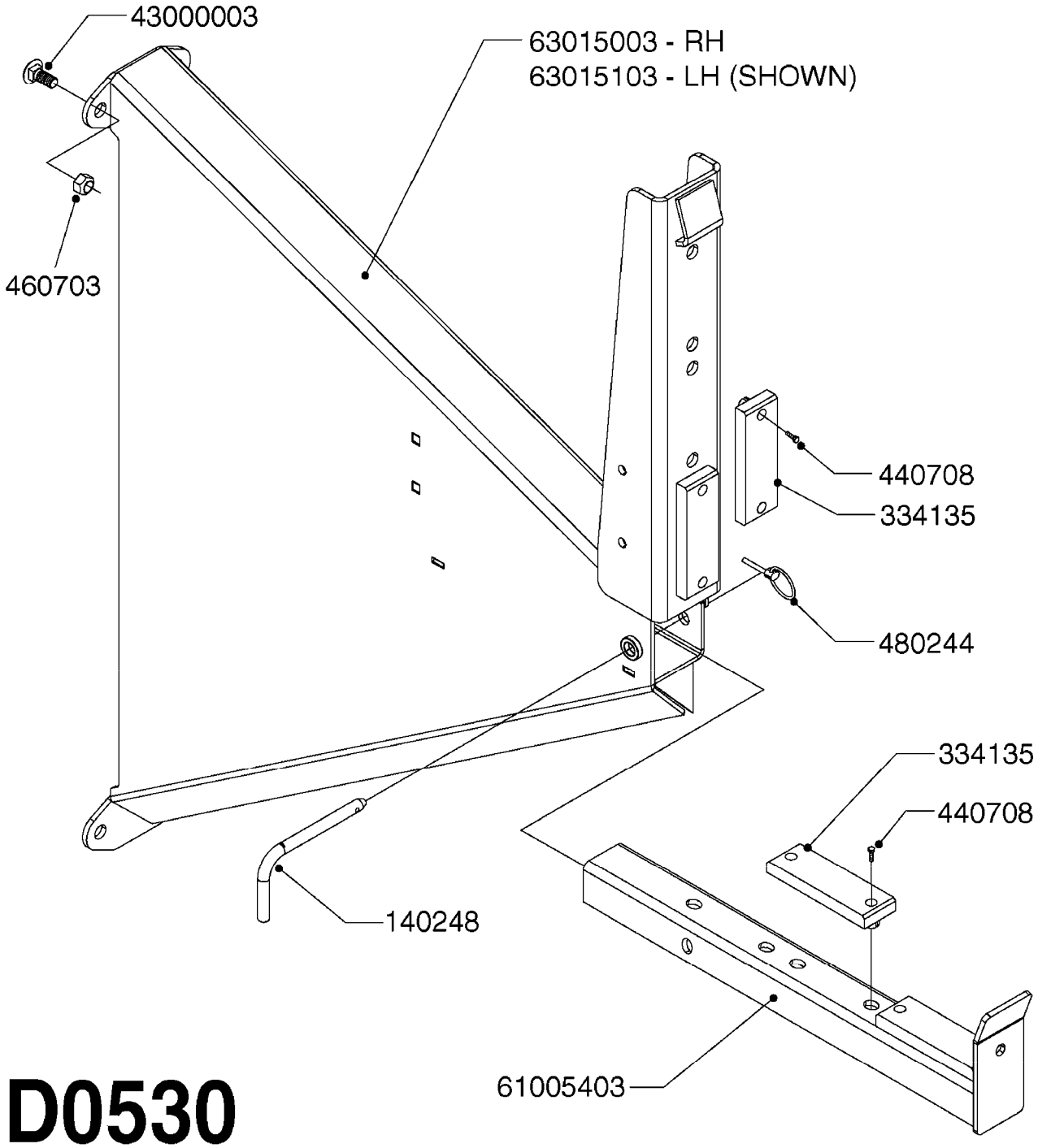

D0530

Agroparts: www.HARDI-INTERNATIONAL.com

TRANS.BKTS SPB/C NEW NAV 03
D0530-HIN, 01:01:16

Date 12.08.2020 11:37

parts-n°	order qty	description
140248	1	PIN DIAM. 12 L=135
334135	1	SLIDE SHOE 140X45X15
440708	1	SCREW M5.5X16 SELF TAPPING SS
460703	1	NUT HEX M12X1.75 LOCK DIN985A2 SS
480244	1	PIN SNAP D4.5
43000003	1	BOLT HEX 8.8 CARRIAGE M12x40
61005403	1	TRANSPORT TUBE N. NAV. SPB/C
63015003	1	TRANSPORT BKT N. NAV. SPB/C RH
63015103	1	TRANSPORT BKT N. NAV. SPB/C LH

TRANSPORT BRACKETS - CM/CM+
D0540-HIN, 01:01:16

Date 12.08.2020 11:37

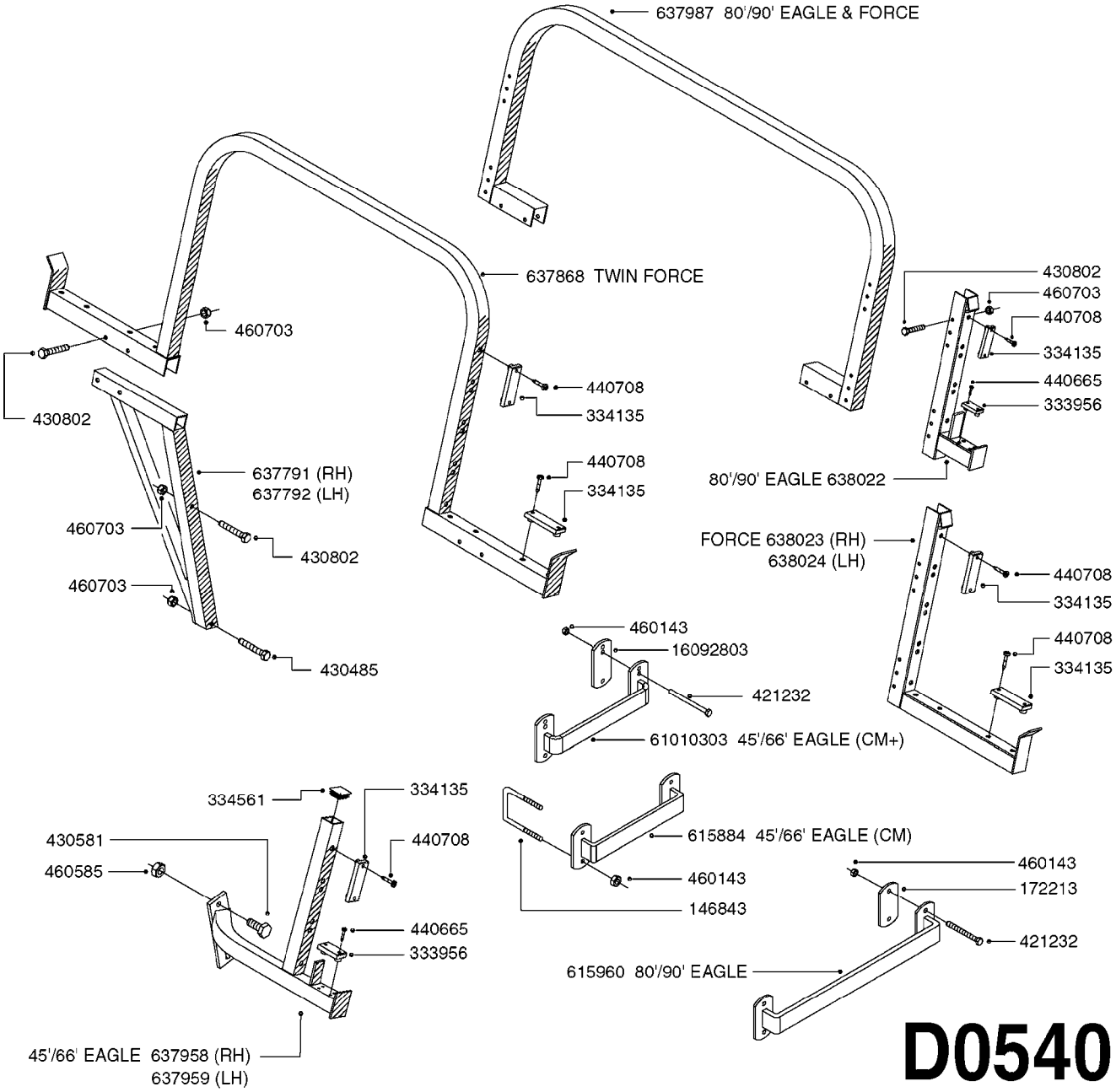

Agroparts: www.HARDI-INTERNATIONAL.com

TRANSPORT BRACKETS - CM/CM+
D0540-HIN, 01:01:16

Date 12.08.2020 11:37

parts-n°	order qty	description
146843	1	BOLT U M8 F.60 x 60
172213	1	FLAT BAR F.BOOM STRAP
333956	1	SLIDE SHOE 91X25X10
334135	1	SLIDE SHOE 140X45X15
334561	1	PLUG 50x50x2 F.SQ.TUBE
421232	1	BOLT HEX 8.8 DEL M8X110
430485	1	BOLT HEX 8.8 DEL M12X90
430581	1	BOLT HEX 8.8 DEL M16X40 FT
430802	1	BOLT HEX 8.8 DEL M12X75
440665	1	SCREW M4.2X16 STAINLESS
440708	1	SCREW M5.5X16 SELF TAPPING SS
460143	1	LOCK NUT M8 SST A2 DIN985
460585	1	LOCKING NUT M16 DIN985 A2 SS
460703	1	NUT HEX M12X1.75 LOCK DIN985A2 SS
615884	1	HOOK BRACKET F.TNSPORT 45'-66'
615960	1	TRANSPORT BKT.F.80'-90'HZ CM
637791	1	TRANS.MOUNT BKT. CM PLTFORM RH
637792	1	TRANS.MOUNT BKT. CM PLTFORM LH
637868	1	TRANS.BKT UPPER CM TWIN FORCE
637958	1	TRANS.BKT CM EAGLE45'-66' RH
637959	1	TRANS.BKT CM EAGLE45'-66' LH
637987	1	TRANS.BKT UPPER CM EAGLE80-90'
638022	1	TRANSPORT BKT.F.80-90'HZ CM
638023	1	TRANSPORT BKT.F.110'FORCE RH
638024	1	TRANSPORT BKT.F.110'FORCE LH
16092803	1	PLATE F. TRANSPORT CM+
61010303	1	TRANSPORT MT. F. WING SPB CM+

	Agroparts: www.HARDI-INTERNATIONAL.com	
HARDI	TRANSPORT BRACKET-FORCE CM/CM+ D0550-HIN, 01:01:16	Page 0 Date 12.08.2020 11:37

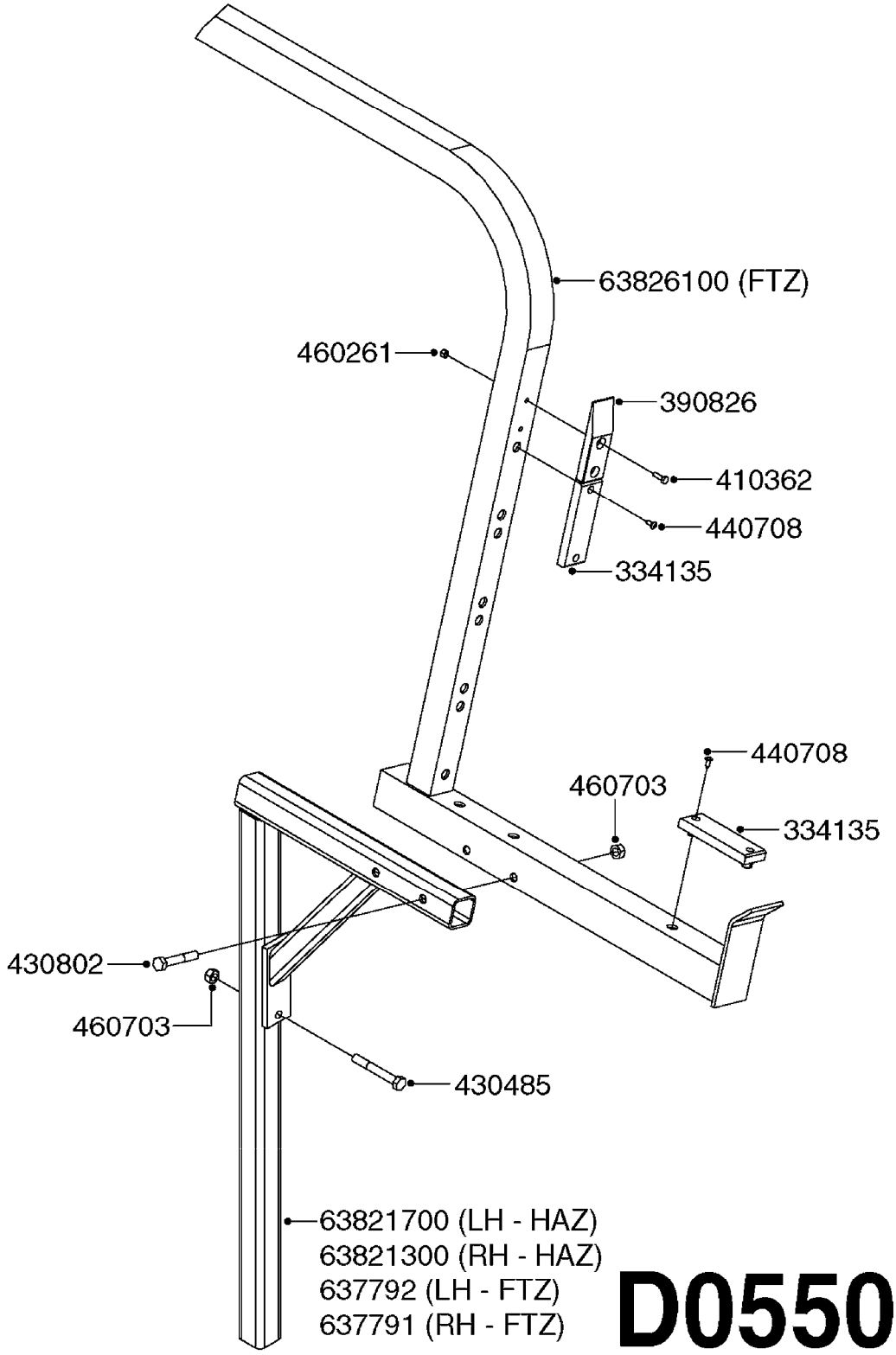

Agroparts: www.HARDI-INTERNATIONAL.com

TRANSPORT BRACKET-FORCE CM/CM+
D0550-HIN, 01:01:16

Date 12.08.2020 11:37

parts-n°	order qty	description
334135	1	SLIDE SHOE 140X45X15
390826	1	SLIDE PAD F.TRANSPORT BKT.CM/D
410362	1	BOLT HEX 8.8 SS M6X20
430485	1	BOLT HEX 8.8 DEL M12X90
430802	1	BOLT HEX 8.8 DEL M12X75
440708	1	SCREW M5.5X16 SELF TAPPING SS
460261	1	NUT HEX M6X1.00 LOCK DIN985 A2 SS
460703	1	NUT HEX M12X1.75 LOCK DIN985A2 SS
637791	1	TRANS.MOUNT BKT. CM PLTFORM RH
637792	1	TRANS.MOUNT BKT. CM PLTFORM LH
63821300	1	TRANS BKT CM FORCE PLTFORM RH
63821700	1	TRANS BKT CM FORCE PLTFORM LH
63826100	1	TRANS.BKT UPPER CM FORCE

TRANSPORT BKTS - NCM/NAVIGATOR
D0560-HIN, 01:01:16

Date 12.08.2020 11:37

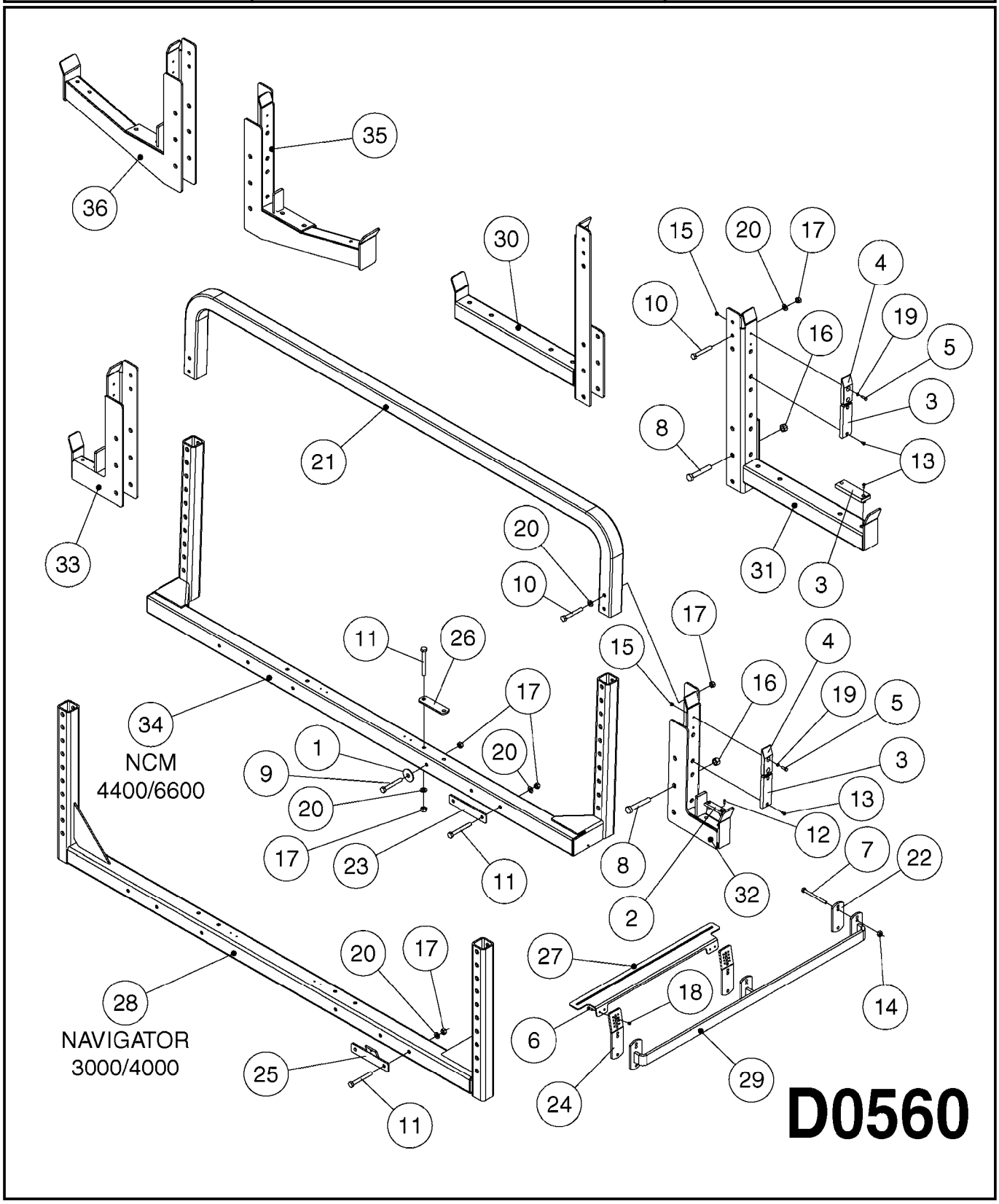

Agroparts: www.HARDI-INTERNATIONAL.com

TRANSPORT BKTS - NCM/NAVIGATOR
D0560-HIN, 01:01:16

Date 12.08.2020 11:37

Pos.	parts-nº	order qty	description
1	163074	1	WASHER D54/D17X3
2	333956	1	SLIDE SHOE 91X25X10
3	334135	1	SLIDE SHOE 140X45X15
4	390826	1	SLIDE PAD F.TRANSPORT BKT.CM/D
5	410362	1	BOLT HEX 8.8 SS M6X20
6	410406	1	BOLT HEX 8.8 DEL M5X16 FT
7	421232	1	BOLT HEX 8.8 DEL M8X110
8	430264	1	BOLT HEX 8.8 DEL M16X100
9	430367	1	BOLT HEX 8.8 DEL M12X100 DIN931
10	430485	1	BOLT HEX 8.8 DEL M12X90
11	430892	1	BOLT HEX 8.8 DEL M12X110
12	440665	1	SCREW M4.2X16 STAINLESS
13	440708	1	SCREW M5.5X16 SELF TAPPING SS
14	460143	1	LOCK NUT M8 SST A2 DIN985
15	460261	1	NUT HEX M6X1.00 LOCK DIN985 A2 SS
16	460585	1	LOCKING NUT M16 DIN985 A2 SS
17	460703	1	NUT HEX M12X1.75 LOCK DIN985A2 SS
18	461217	1	NUT HEX M5 LOCK
19	471125	1	WASHER M6U 6.4X14X1.2,A2 SS
20	471127	1	WASHER, M12, Ø24/13X24X2.5 SS
21	15028703	1	TRANSPORT CROSS TUBE CM4400
22	16092803	1	PLATE F. TRANSPORT CM+
23	16101703	1	PLATE 1/4"x1-1/2" L=270/2xØ13 NCM 4400/6600
23	16118303	1	PLATE F. CM8500-10000 TRANSPORT NCM 9000
24	16109303	1	PLATE F. TRANSPORT REST CM
25	16116703	1	PLATE, S/G TUBE MT NAVIGATOR
26	16138700	1	PLATE F. TRANSPORT CROSS BAR
27	16183403	1	BRACKET, TRANSPORT BAR NOZ SPC, RED T25 NOZZLE BRACKET
28	61010903	1	TRANSPORT CROSS BAR NAVIGATOR
29	61012603	1	TRANSPORT REST SPC NCM 4400
30	63024603	1	TRANSPORT REST FTZ R.H. CM4400
31	63024703	1	TRANSPORT REST FTZ L.H. CM4400
32	63024803	1	TRANSPORT REST SPC NCM/NAV
33	63024903	1	TRANSPORT REST SPC NCM/NAV
34	63027503	1	TRANSPORT CROSS BAR NCM44/6600
35	63038003	1	TRANSPORT BRACKET, 120 SPC LH
36	63038103	1	TRANSPORT BRACKET, 120 SPC RH

TRANSPORT BKTS - SPB NAVIGATOR
D0570-HIN, 01:01:16

Date 12.08.2020 11:37

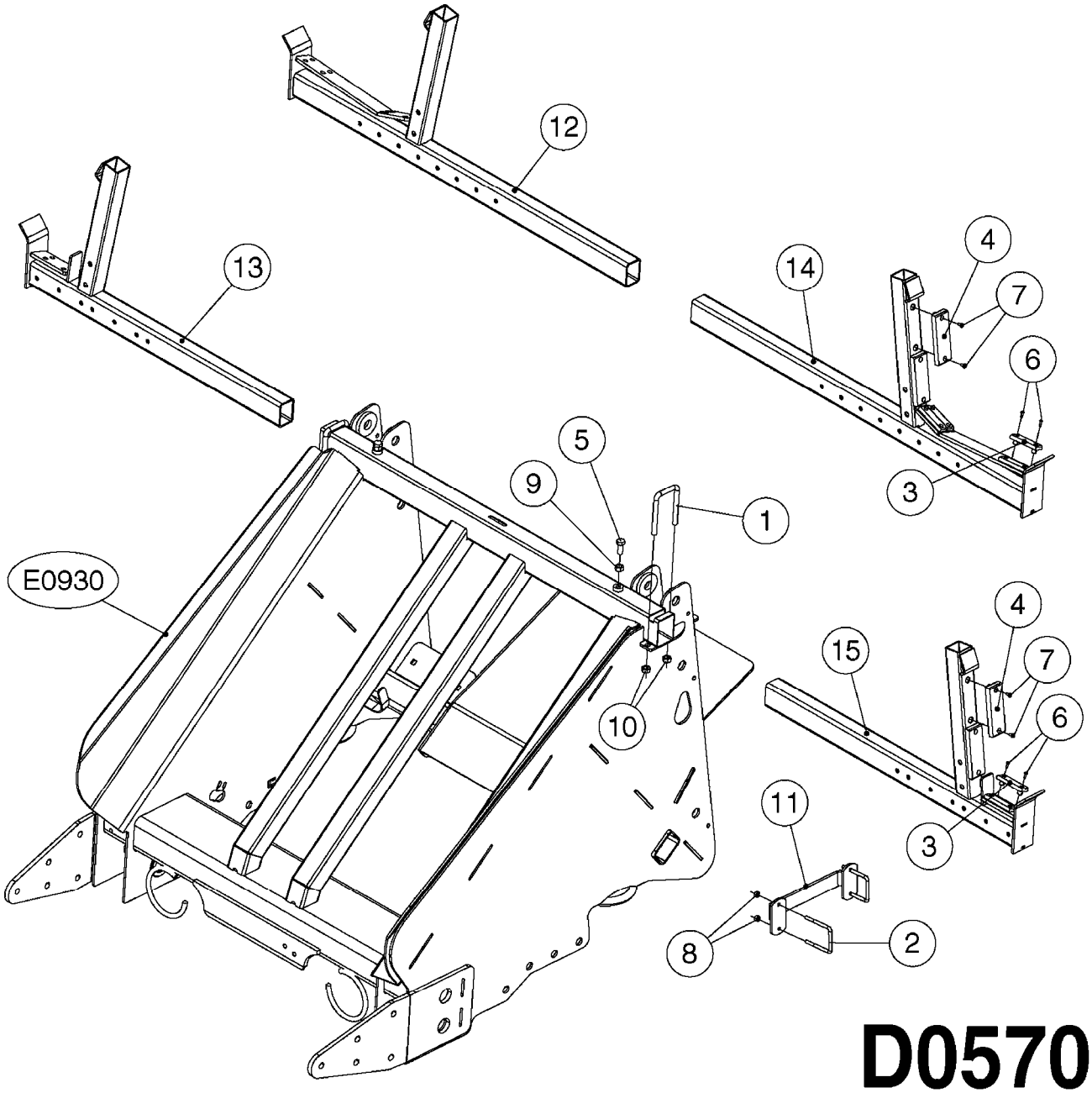

Agroparts: www.HARDI-INTERNATIONAL.com

TRANSPORT BKTS - SPB NAVIGATOR
D0570-HIN, 01:01:16

Date 12.08.2020 11:37

Pos.	parts-nº	order qty	description
1	146362	1	BOLT U 12 X 280MM
2	146843	1	BOLT U M8 F.60 x 60
3	333956	1	SLIDE SHOE 91X25X10
4	334135	1	SLIDE SHOE 140X45X15
5	430286	1	BOLT HEX 8.8 DEL M12X30 FT
6	440665	1	SCREW M4.2X16 STAINLESS
7	440708	1	SCREW M5.5X16 SELF TAPPING SS
8	460143	1	LOCK NUT M8 SST A2 DIN985
9	460386	1	NUT HEX M12X1.75
10	460703	1	NUT HEX M12X1.75 LOCK DIN985A2 SS
11	615884	1	HOOK BRACKET F.TNSPORT 45'-66'
12	63064800	1	TRANSPORT BRACKET SPB/Y R.NAV
13	63065000	1	TRANSPORT BRACKET SPB/Z R.NAV
14	63067000	1	TRANSPORT BRACKET SPB/Y L.NAV
15	63067200	1	TRANSPORT BRACKET SPB/Z L.NAV

HARDI	**Agroparts: www.HARDI-INTERNATIONAL.com**	
	TRANSPORT BKTS - SPB RANGER D0575-HIN, 06:01:20	Page 0 Date 12.08.2020 11:37

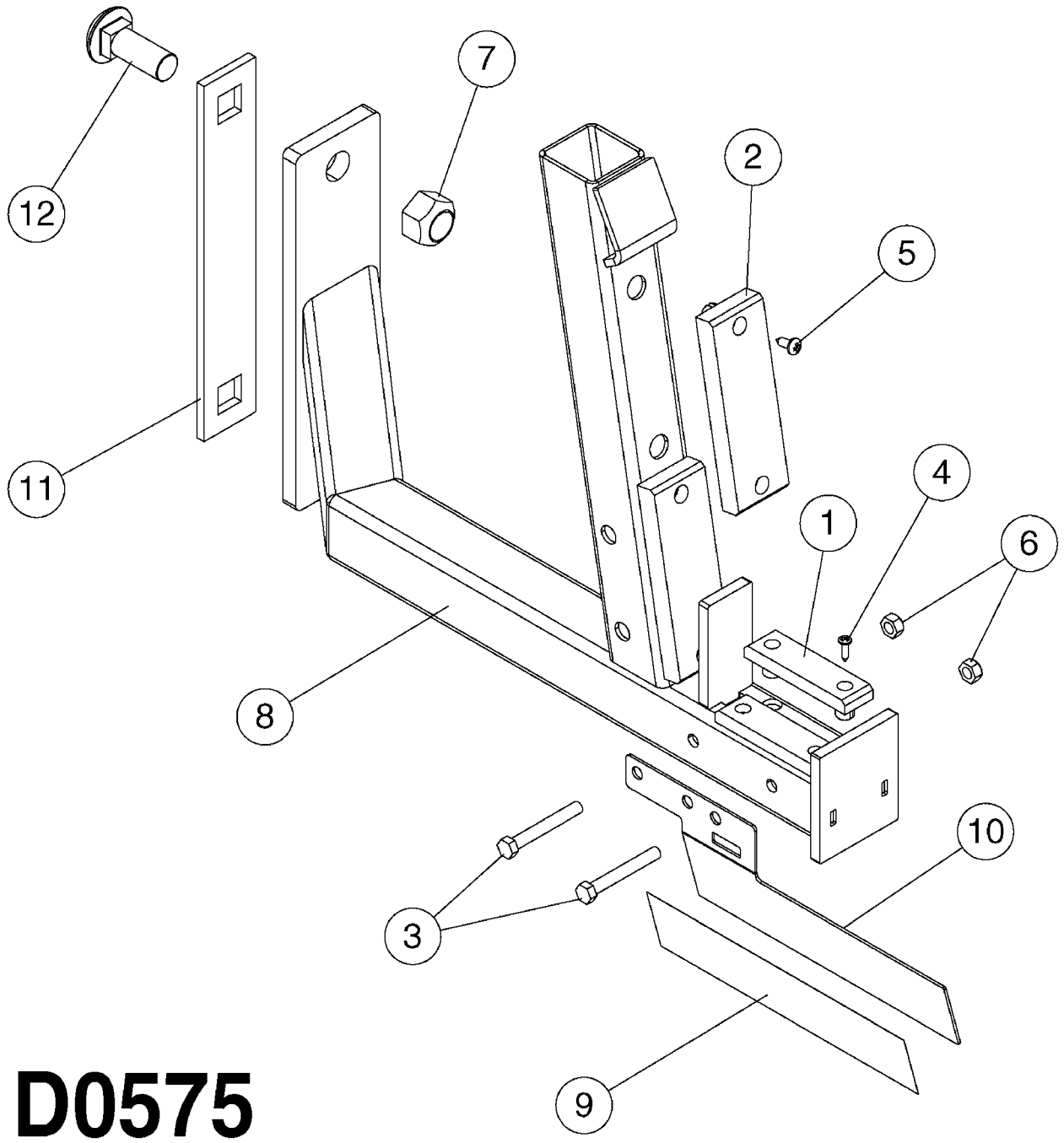

D0575

Agroparts: www.HARDI-INTERNATIONAL.com

TRANSPORT BKTS - SPB RANGER
D0575-HIN, 06:01:20

Date 12.08.2020 11:37

Pos.	parts-nº	order qty	description
1	333956	1	SLIDE SHOE 91X25X10
2	334135	1	SLIDE SHOE 140X45X15
3	421024	1	BOLT HEX 8.8 DEL M8X60
4	440665	1	SCREW M4.2X16 STAINLESS
5	440708	1	SCREW M5.5X16 SELF TAPPING SS
6	460143	1	LOCK NUT M8 SST A2 DIN985
7	460806	1	NUT HEX M20X2.50 LOCK DIN985A2 SS
8	637958	1	TRANS.BKT CM EAGLE45'-66' RH
8	637959	1	TRANS.BKT CM EAGLE45'-66' LH
9	10533903	1	DECAL REFLECTIVE AMBER 50X230
10	16237803	1	REFLECTOR BRACKET, BREAKAWAY, L, RED
10	16240203	1	REFLECTOR BRACKET, BREAKAWAY, R, RED
11	17012703	1	BAR, CRG BOLT RANGER FRAME
12	43000203	1	BOLT HEX 8.8 CARRIAGE M20x2.5

BOOM FORCE INER/OUTER WING 110
D0580-HIN, 01:01:16

Date 12.08.2020 11:37

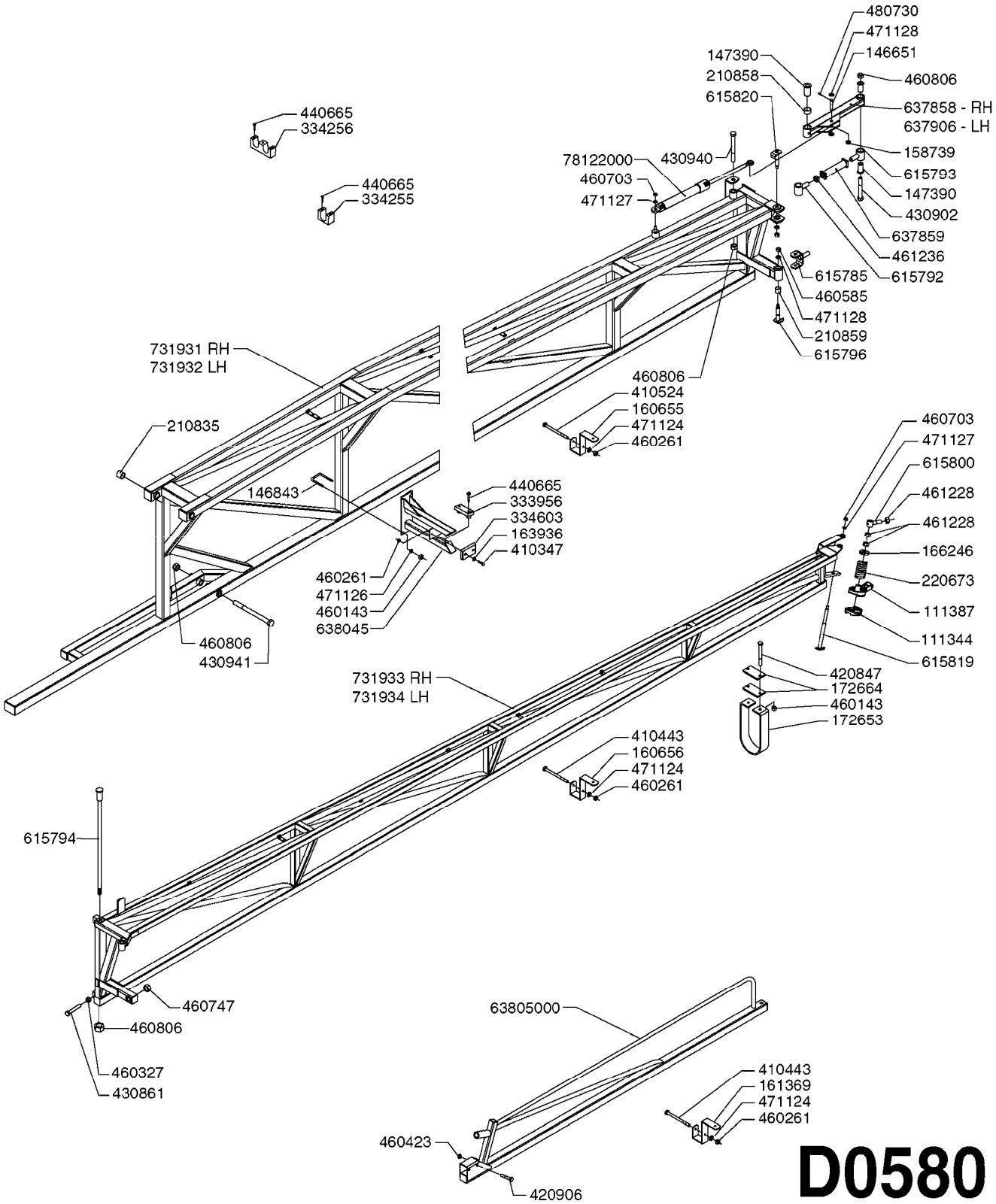

Agroparts: www.HARDI-INTERNATIONAL.com

BOOM FORCE INER/OUTER WING 110
D0580-HIN, 01:01:16

Date 12.08.2020 11:37

parts-n°	order qty	description
111344	1	CLAW CLUTCH Ø100/Ø20,5 UNDER PART RED
111387	1	CLAW CLUTCH D100 UPPER PART
146651	1	PIN
146843	1	BOLT U M8 F.60 x 60
147390	1	BUSHING
158739	1	BUSHING 3/4"X10
160655	1	CLAMP NOZZLE TUBE 80X60
160656	1	CLAMP NOZZLE TUBE 50X50
161369	1	CLAMP NOZZLE TUBE 40 X40 F110'
163936	1	WASHER D15/D6.2X1
166246	1	WASHER CUP D53 F.SPRING
172653	1	WING TIP GUARD
172664	1	FLATBAR BACKING PLATE
210835	1	BUSHING D28/25 L=25
210858	1	BUSHING 034/30 L=20
210859	1	BUSH Ø23X20 L20
220673	1	SPRING F.PIVOT 100 X 51
333956	1	SLIDE SHOE 91X25X10
334255	1	PIPE HOLDER SINGLE FOR 0 22
334256	1	PIPE HOLDER DOUBLE FOR D22
334603	1	RUBBER STOP 86X48X15
410347	1	SCREW M6X20 8.8
410443	1	BOLT HEX 8.8 DEL M6X70
410524	1	BOLT HEX 8.8 DEL M6X100
420847	1	BOLT HEX 8.8 DEL M8X85
420906	1	BOLT HEX 8.8 DEL M10X60
430861	1	BOLT HEX 8.8 DEL M16X100 FT
430902	1	BOLT HEX 8.8 M20X150
430940	1	BOLT M20X210 8.8 DEL.
430941	1	BOLT M20X260 8.8 DEL.
440665	1	SCREW M4.2X16 STAINLESS
460143	1	LOCK NUT M8 SST A2 DIN985
460261	1	NUT HEX M6X1.00 LOCK DIN985 A2 SS
460327	1	NUT HEX M16X2
460423	1	NUT HEX M10X1.50 LOCK DIN985A2 SS
460585	1	LOCKING NUT M16 DIN985 A2 SS
460703	1	NUT HEX M12X1.75 LOCK DIN985A2 SS
460747	1	NUT HEX M24 LOCK
460806	1	NUT HEX M20X2.50 LOCK DIN985A2 SS
461228	1	NUT HEX M20
461236	1	NUT HEX M24X1.5
471124	1	WASHER, M6, Ø18/ 6.4X 1.6, SS
471126	1	WASHER, M8, Ø16/ 8.4X 1.6, SS
471127	1	WASHER, M12, Ø24/13X24X2.5 SS
471128	1	WASHER, M16, Ø30/17.0X 3.0, SS
480730	1	SPRING DOWEL PIN 5X30 SST
615785	1	LINK EYE
615792	1	LINK EYE M24 RH THREAD
615793	1	LINK EYE M24 LH THREADS
615794	1	AXLE FOR OUTER WING D30/20 700
615796	1	PIN D20 X M16 L=119MM
615800	1	LINK EYE BR.WING
615819	1	PIN
615820	1	PIN D20 X M16 L=127MM
637858	1	LINK ARM HAZ OUTER WING RH
637859	1	TURN BUCKLE
637906	1	LINK ARM HAZ OUTER WING LH
638045	1	TRANSPORT BRACKET FORCE 110'
731931	1	INNER WING RH 110' FORCE
731932	1	INNER WING LH 110' FORCE
731933	1	OUTER WING RH 110' FORCE

BOOM FORCE INER/OUTER WING 110
D0580-HIN, 01:01:16

Date 12.08.2020 11:37

parts-n°	order qty	description
731934	1	OUTER WING LH 110' FORCE
63805000	1	BREAKAWAY 110' FORCE
78122000	1	CYLINDER DOUBLE Ø40/20-300 0°

BOOM FORCE CENTER FRAME
D0590-HIN, 08:09:16

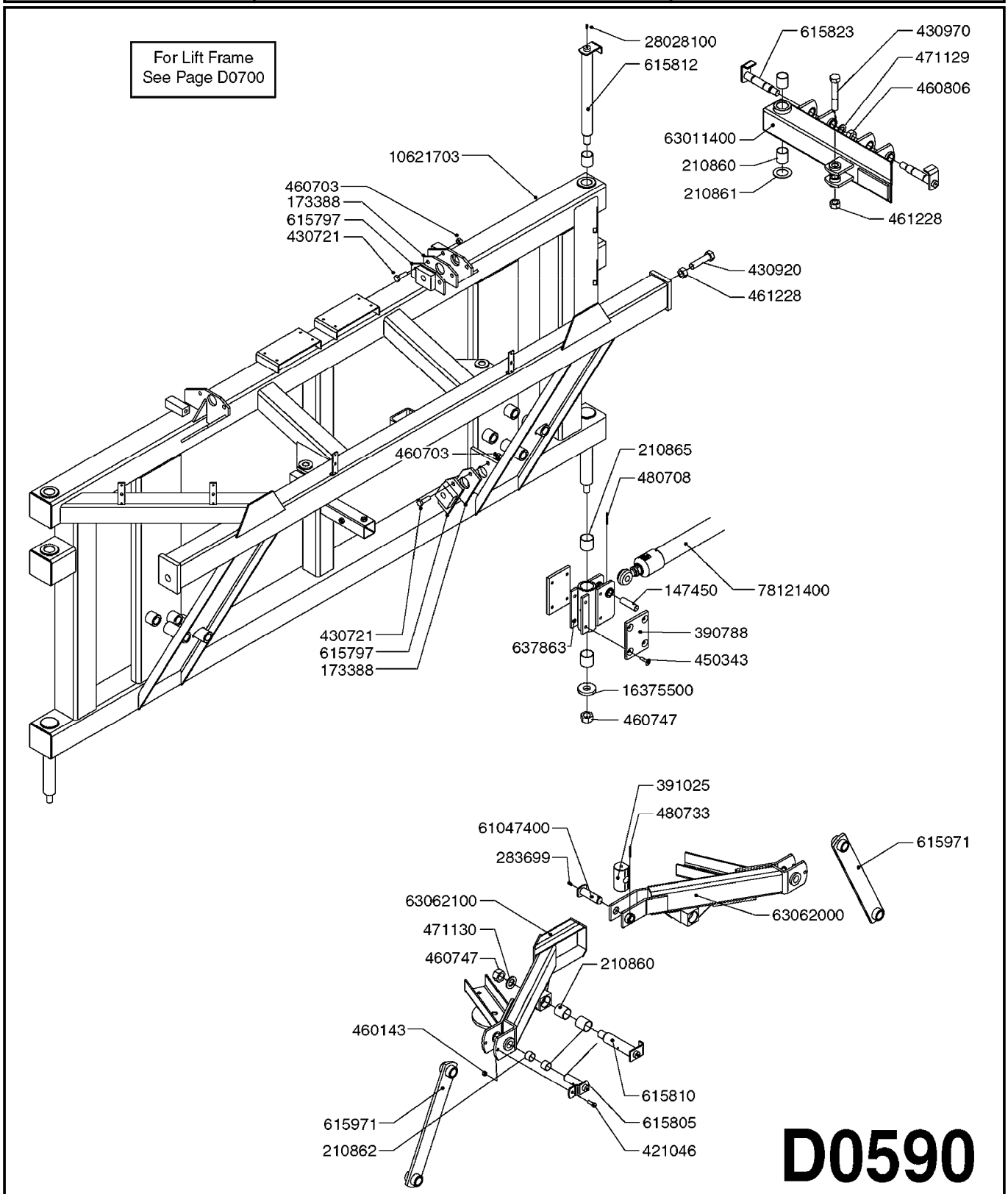

D0590

Agroparts: www.HARDI-INTERNATIONAL.com

BOOM FORCE CENTER FRAME
D0590-HIN, 08:09:16

Date 12.08.2020 11:37

parts-n°	order qty	description
147450	1	PIN D20 X 70
173388	1	SPACER PLATE F.LINK ARM
210860	1	BUSHING
210861	1	BUSHING
210862	1	BUSHING 28X25X20
210865	1	BUSHING 40mm40mm DU
283699	1	GREASE NIPPLE M6X1
390788	1	TEFLON WARE PAD
391025	1	JOINER BLOCK - FORCE
421046	1	BOLT HEX M8X25/25 A2 SS DIN933
430721	1	BOLT HEX 8.8 DEL M12X40 FT
430920	1	BOLT HEX M20x80MM
430970	1	BOLT HEX M20X120 DIN931- DEL
450343	1	SCREW M8X30 ALLEN HEAD C/S SS
460143	1	LOCK NUT M8 SST A2 DIN985
460703	1	NUT HEX M12X1.75 LOCK DIN985A2 SS
460747	1	NUT HEX M24 LOCK
460806	1	NUT HEX M20X2.50 LOCK DIN985A2 SS
461228	1	NUT HEX M20
471129	1	WASHER, M20, Ø37/21.0X 3.0, SS
471130	1	WASHER, M24, Ø44/25.0X 4.0, SS
480708	1	PIN D4 X 45
480733	1	PIN D6 X 40
615797	1	CONTROL ARM MT.PLATE
615805	1	PIN
615810	1	PIN
615812	1	PIN
615823	1	PIN
615971	1	TRAPEZE ARM FORCE 110'
637863	1	HINGE F.TF LOWER
10621703	1	CENTER FRAME CM-FORCE COMP.
16375500	1	WASHER 10.0X60X25 RED
28028100	1	GREASE NIPPLE 1/8'RG 90°
61047400	1	PIN D25 L=102.5MM
63011400	1	HINGE F.TF
63062000	1	SUSPENSION ARM RH
63062100	1	SUSPENSION ARM LH
78121400	1	DOUBLE CYLINDER D 50/30-300

BOOM TWIN INNER WING 60 66 HAC
D0600-HIN, 01:01:16

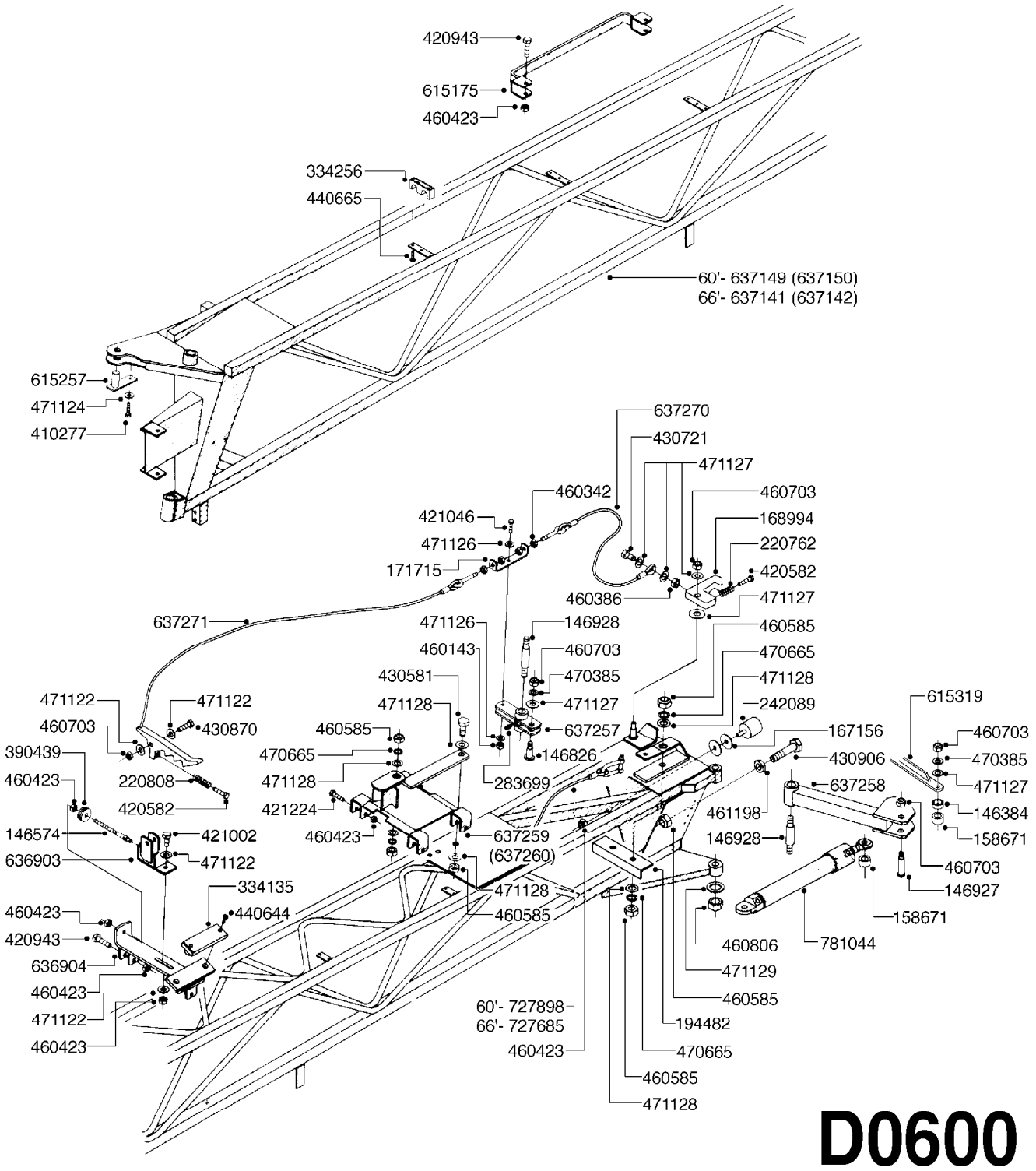

D0600

Agroparts: www.HARDI-INTERNATIONAL.com

BOOM TWIN INNER WING 60 66 HAC
D0600-HIN, 01:01:16

Date 12.08.2020 11:37

parts-n°	order qty	description
146384	1	BUSHING
146574	1	PIN D14 X 145
146826	1	BOLT SHOULDER M12
146927	1	PIN D 16.8 X 80MM
146928	1	STUD M16 F. HAC FOLD CYL.
158671	1	BUSHING D25.0/17
167156	1	WASHER D46.5/D12.4X2.5
168994	1	HOOK
171715	1	FLATBAR 6X30 L180MM
194482	1	PLATE
220762	1	SPRING D12/2.0X38
220808	1	SPRING 60/15X80
242089	1	RUBBER STOP D50X40 M10
283699	1	GREASE NIPPLE M6X1
334135	1	SLIDE SHOE 140X45X15
334256	1	PIPE HOLDER DOUBLE FOR D22
390439	1	PULLEY D40/20
410277	1	410277
420582	1	BOLT HEX 8.8 DEL M8X20 FT A2
420943	1	BOLT HEX 8.8 DEL M10X50
421002	1	BOLT HEX 8.8 DEL M10X30 FT DIN933
421046	1	BOLT HEX M8X25/25 A2 SS DIN933
421224	1	BOLT HEX 8.8 DEL M10X55
430581	1	BOLT HEX 8.8 DEL M16X40 FT
430721	1	BOLT HEX 8.8 DEL M12X40 FT
430870	1	BOLT HEX 8.8 DEL M12X55 FT
430906	1	BOLT HEX 8.8 DEL M16X70 FT
440644	1	SCREW NO.10 5/8"
440665	1	SCREW M4.2X16 STAINLESS
460143	1	LOCK NUT M8 SST A2 DIN985
460342	1	NUT HEX M10 DEL DIN934
460386	1	NUT HEX M12X1.75
460423	1	NUT HEX M10X1.50 LOCK DIN985A2 SS
460585	1	LOCKING NUT M16 DIN985 A2 SS
460703	1	NUT HEX M12X1.75 LOCK DIN985A2 SS
460806	1	NUT HEX M20X2.50 LOCK DIN985A2 SS
461198	1	NUT HEX M16X2 JAMB
470385	1	WASHER D14.8D8.1X2 LOCK GALV.
470665	1	WASHER D16.5/D26X1.2 LOCK
471122	1	WASHER, M10, Ø20/10.5X 2.0, SS
471124	1	WASHER, M6, Ø18/ 6.4X 1.6, SS
471126	1	WASHER, M8, Ø16/ 8.4X 1.6, SS
471127	1	WASHER, M12, Ø24/13X24X2.5 SS
471128	1	WASHER, M16, Ø30/17.0X 3.0, SS
471129	1	WASHER, M20, Ø37/21.0X 3.0, SS
615175	1	BRACKET F.TWIN HAC
615257	1	PIN
615319	1	BRACKET
636903	1	BRACKET
636904	1	BRACKET
637141	1	INNER SECTION 24M HAC HÏJRE
637142	1	LH INNER BOOM F. TWIN 80'
637149	1	WING INNER RIGHT HAC
637150	1	WING INNER LEFT HAC
637257	1	PIVOT
637258	1	ARM
637259	1	BRACKET
637260	1	BRACKET
637270	1	CABLE 3.1/4.1 L890MM
637271	1	CABLE 3.1/4.1 L590MM
727685	1	CABLE D7 X 4500 66' HAC INNER

BOOM TWIN INNER WING 60 66 HAC
D0600-HIN, 01:01:16

Date 12.08.2020 11:37

parts-n°	order qty	description
727898	1	CABLE
781044	1	CYLINDER DOUBLE D40/20-300

BOOM TWIN OUTER WING 60 66 HAC
D0610-HIN, 01:01:16

Date 12.08.2020 11:37

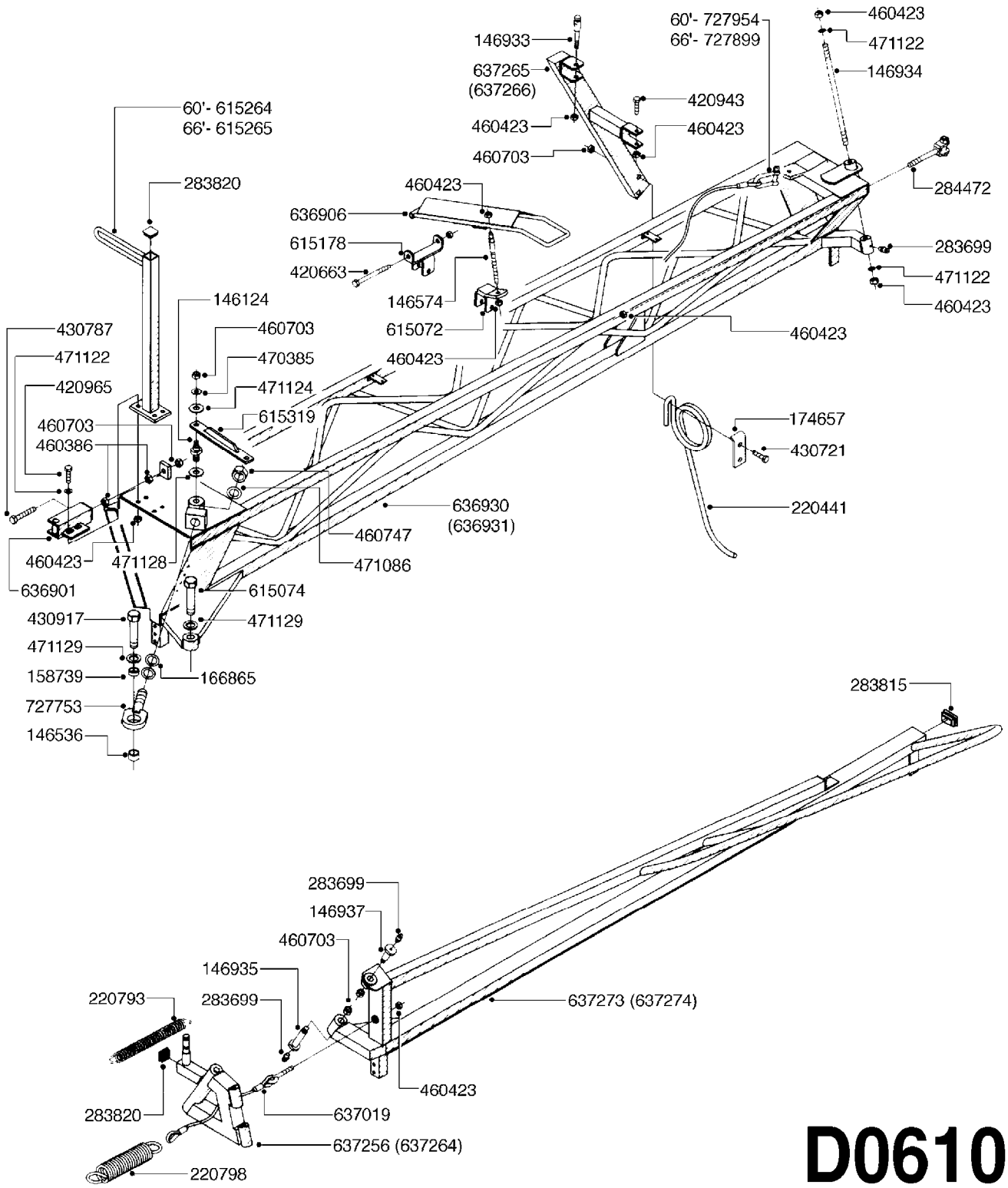

Agroparts: www.HARDI-INTERNATIONAL.com

BOOM TWIN OUTER WING 60 66 HAC
D0610-HIN, 01:01:16

Date 12.08.2020 11:37

parts-n°	order qty	description
146124	1	ANCHOR PIN CABLE EAGLE
146536	1	BUSHING
146574	1	PIN D14 X 145
146933	1	BOLT
146934	1	PIN D12X288MM
146935	1	PIN D16 X 92
146937	1	PIN D16 X 61
158739	1	BUSHING 3/4"X10
166865	1	WASHER D35/D25X2
174657	1	SPRING GUIDE
220441	1	SPRING TOOTH FOR BOOM
220793	1	SPRING D21/D4X250MM
220798	1	SPRING 7X49X250
283699	1	GREASE NIPPLE M6X1
283815	1	PLUG 50X30MMX2.6 BLACK
283820	1	PLUG 30MM / 1-1/4X1/8 SQ TUBE
284472	1	EYE BOLT
420663	1	BOLT HEX 8.8 DEL M10X120 A4-80
420943	1	BOLT HEX 8.8 DEL M10X50
420965	1	M10X40 MACHINE SCREW STAINLESS
430721	1	BOLT HEX 8.8 DEL M12X40 FT
430787	1	BOLT HEX M12X90 A4-80
430917	1	SCREW M20X90
460386	1	NUT HEX M12X1.75
460423	1	NUT HEX M10X1.50 LOCK DIN985A2 SS
460703	1	NUT HEX M12X1.75 LOCK DIN985A2 SS
460747	1	NUT HEX M24 LOCK
470385	1	WASHER D14.8D8.1X2 LOCK GALV.
471086	1	STAR WASHER D25.0/38.0 X 1.5
471122	1	WASHER, M10, Ø20/10.5X 2.0, SS
471124	1	WASHER, M6, Ø18/ 6.4X 1.6, SS
471128	1	WASHER, M16, Ø30/17.0X 3.0, SS
471129	1	WASHER, M20, Ø37/21.0X 3.0, SS
615072	1	BRACKET
615074	1	BOLT D20X126
615178	1	HINGE
615264	1	CABLE HOLDER, 60'
615265	1	CABLE HOLDER, 66'
615319	1	BRACKET
636901	1	CLIP
636906	1	TRANSPORT BKT.
636930	1	WING OUTER RIGHT HAC
636931	1	WING OUTER LEFT HAC
637019	1	CABLE D7X350
637256	1	HINGE RH
637264	1	HINGE LH
637265	1	BRACKET RIGHT
637266	1	BRACKET LEFT
637273	1	WING BREAKAWAY RIGHT HAC
637274	1	WING BREAKAWAY LEFT HAC
727753	1	HINGE F.HAC
727899	1	CABLE 7 X 7000
727954	1	CABLE ASSY. 7 x 6000

	Agroparts: www.HARDI-INTERNATIONAL.com	
HARDI	BOOM TWIN H FRAME & CENTER HAC D0620-HIN, 01:01:16	Page 0 Date 12.08.2020 11:37

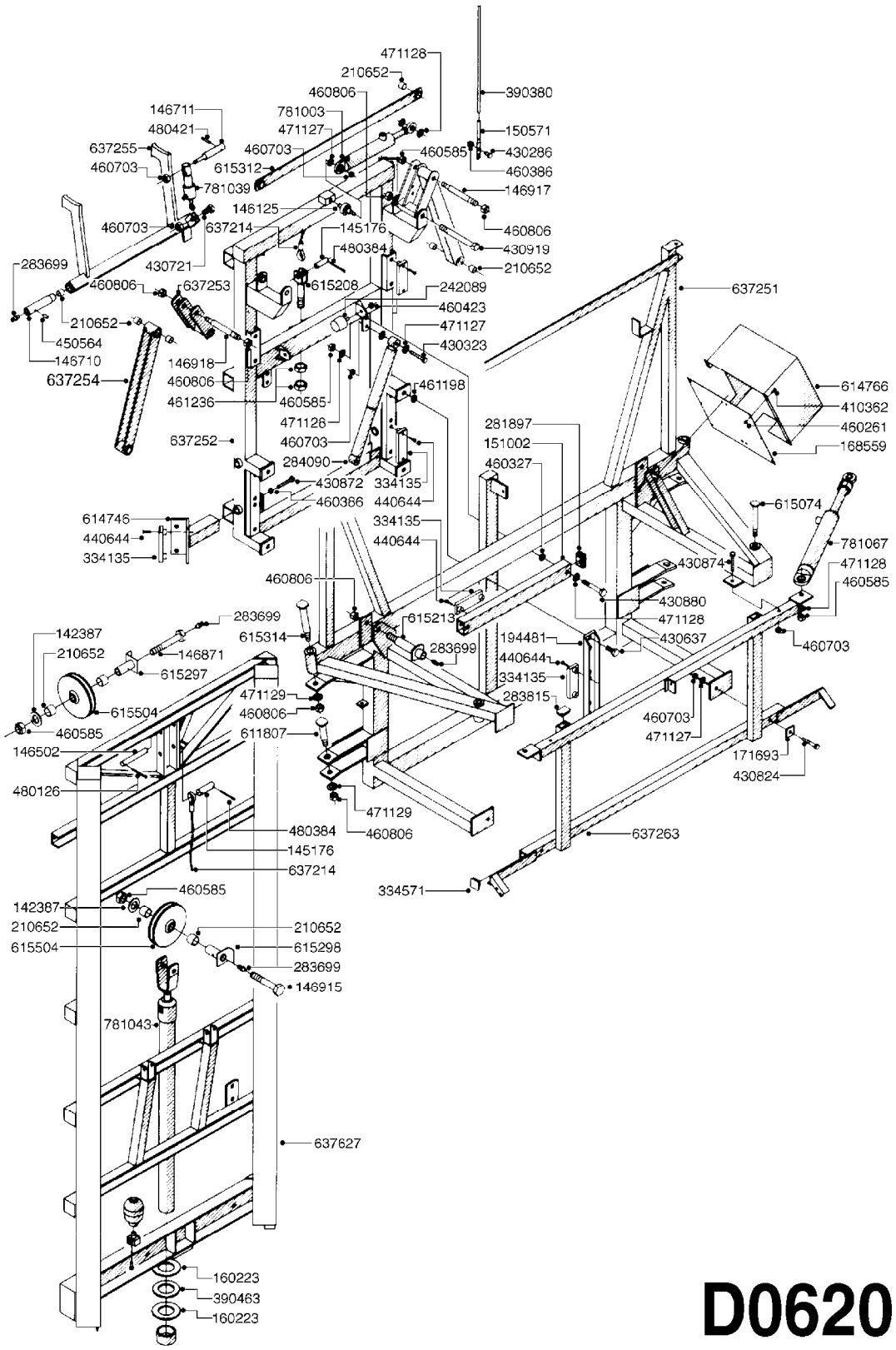

Agroparts: www.HARDI-INTERNATIONAL.com

BOOM TWIN H FRAME & CENTER HAC
D0620-HIN, 01:01:16

Date 12.08.2020 11:37

parts-n°	order qty	description
142387	1	WASHER D40D23X5
145176	1	PIN D19.8 X 60
146125	1	PIN D45X16.8XM16XM12 L86
146502	1	SHAFT D16,0 - 105MM
146710	1	PIN D25-118MM
146711	1	PIN D25-156MM
146871	1	BOLT HEX M16X110 F. GREASE
146915	1	BOLT D16X90
146917	1	PIN D22-181MM
146918	1	PIN D22 X 175
150571	1	BRACKET F.HAC
151002	1	TUBE 60X40X3.2 L=580
160223	1	WASHER D110/D62X6 RED
168559	1	PLATE FOR HY-SCREEN
171693	1	SPACER M40X40X3/D13
194481	1	U CHANNEL 60X30X6 L395MM
210652	1	BUSHING TEFLON D25/D22X20
242089	1	RUBBER STOP D50X40 M10
281897	1	COVER PLUG
283699	1	GREASE NIPPLE M6X1
283815	1	PLUG 50X30MMX2.6 BLACK
284090	1	SHOCK ABSORBER
334135	1	SLIDE SHOE 140X45X15
334571	1	PLUG 40x40x2 F.SQ.TUBE
390380	1	ROD FIBREGLASS D10X500
390463	1	WASHER D104/D61X6 PUR
410362	1	BOLT HEX 8.8 SS M6X20
430286	1	BOLT HEX 8.8 DEL M12X30 FT
430323	1	BOLT HEX 8.8 DEL M12X60
430637	1	BOLT HEX 8.8 DEL M16X50 FT
430721	1	BOLT HEX 8.8 DEL M12X40 FT
430824	1	BOLT HEX 8.8 DEL M12X120
430872	1	BOLT HEX 8.8 DEL M12X100 FT
430874	1	SCREW SET 8.8 DEL M12X70 FT
430880	1	BOLT HEX 8.8 DEL M16X140
430919	1	BOLT HM 20-180/52 8.8 DAC DIN931
440644	1	SCREW NO.10 5/8"
450564	1	SCREW M6X12 ALLEN
460261	1	NUT HEX M6X1.00 LOCK DIN985 A2 SS
460327	1	NUT HEX M16X2
460386	1	NUT HEX M12X1.75
460423	1	NUT HEX M10X1.50 LOCK DIN985A2 SS
460585	1	LOCKING NUT M16 DIN985 A2 SS
460703	1	NUT HEX M12X1.75 LOCK DIN985A2 SS
460806	1	NUT HEX M20X2.50 LOCK DIN985A2 SS
461198	1	NUT HEX M16X2 JAMB
461236	1	NUT HEX M24X1.5
471127	1	WASHER, M12, Ø24/13X24X2.5 SS
471128	1	WASHER, M16, Ø30/17.0X 3.0, SS
471129	1	WASHER, M20, Ø37/21.0X 3.0, SS
480126	1	PIN COTTER M4X30
480384	1	PIN COTTER 3/16 x 1-1/2"
480421	1	PIN ROLL D5X45
611807	1	BEARING BOLT
614746	1	BRACKET ADUST. F. SLIDE HAC
614766	1	SCREEN
615074	1	BOLT D20X126
615208	1	YOKE
615213	1	PIN D22 X 70 LUBED F.EAGLE
615297	1	BUSHING D22/D16X50MM
615298	1	BUSHING D22/D16

parts-n°	order qty	description
615312	1	BAR F.TWIN SUSP.HAC
615314	1	PIN D26X231 HAC
615504	1	PULLEY D180X25X43
637214	1	CABLE D10X3150
637251	1	CENTER SECTION 60/66 HAC
637252	1	LIFT FRAME F. TWIN SYSTEM
637253	1	BKT.F.TRAPEZE HAC 92
637254	1	TRAPEZE ARM TWIN HAC
637255	1	HOOK
637263	1	BOOM PART REAR HAC
637627	1	H FRAME F.TWIN HAC 650
781003	1	CYLINDER DOUBLE D40/20-180
781039	1	CYL D25/12-50 172MM alt 781139
781043	1	CYLINDER DOUBLE D60/25-900
781067	1	CYL DOUB D50/30-300 78121600

	Agroparts: www.HARDI-INTERNATIONAL.com	
HARDI	BOOM - TWN HAC 60',66' AIR SYS D0630-HIN, 01:01:16	Page 0 Date 12.08.2020 11:37

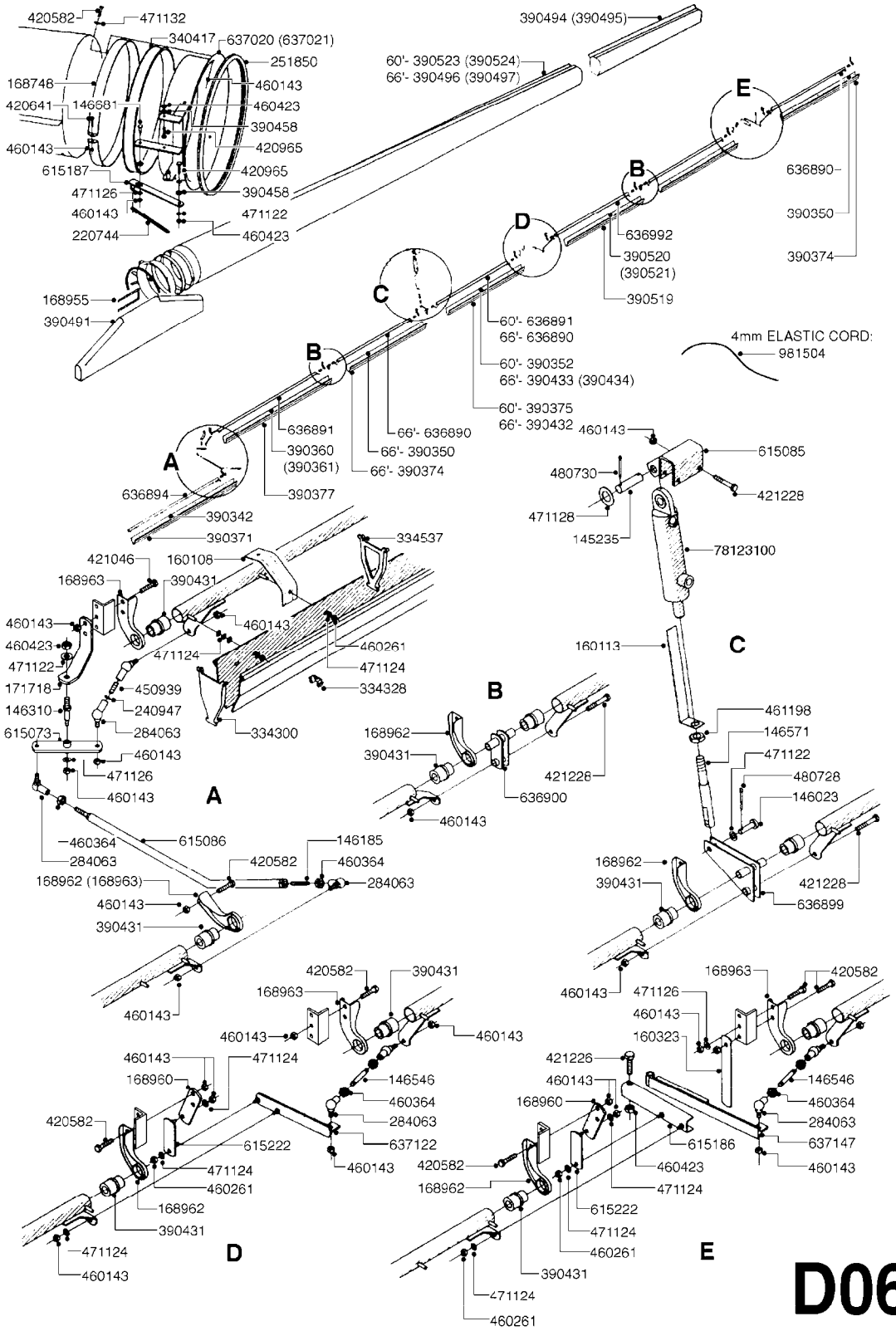

Agroparts: www.HARDI-INTERNATIONAL.com

BOOM - TWN HAC 60',66' AIR SYS
D0630-HIN, 01:01:16

Date 12.08.2020 11:37

parts-n°	order qty	description
145235	1	PIN D12 X 60
146023	1	PIN FOR COGWHEEL
146185	1	THREADED STUD
146310	1	THREADED CONN.PIN 9.9 X 63MM
146546	1	SHAFT D8 80MM
146571	1	PIN D20 X 185
146681	1	PIN D20.0 X 35/M8
160108	1	BRACKET F.AIR SLOT TWIN
160113	1	GUIDE
160323	1	BRACKET F.AIR COUPLING
168748	1	CLAMP L=1575
168955	1	FRAME F. TWINBAG CENTER OUTLET
168960	1	BRACKET 3X30 95MM
168962	1	AIR SLOT BKT.RIGHT
168963	1	AIR SLOT BKT.LEFT
171718	1	BRACKET
220744	1	SPRING 150/25
240947	1	O-RING D7.3X2.4 NITRIL
251850	1	SEAL F.AIR OPENING TWIN 1800MM
284063	1	BALL JOINT M6 90 DEGREE
334300	1	END PLATE
334328	1	CLIPS FOR AIR SPLIT
334537	1	DIVIDER F.AIR SPOUT
340417	1	TANK FRAME PACK.1640MM 64.5'
390342	1	AIR SLOT SKIRT L=2000 W/HOLE
390350	1	AIR SPLIT,FRONTSIDE 1500
390352	1	AIR SPLIT,FRONTSIDE 2000
390360	1	SPACE SPLIT FRONT 2M RIGHT
390361	1	SPACE SPLIT FRONT 2M LEFT
390371	1	AIR SLOT SKIRT L =2000
390374	1	AIR SLOT SKIRT L =1460
390375	1	AIR SLOT SKIRT L=1960
390377	1	AIR SLOT SKIRT L=2065
390431	1	BUSHING INST.D32/D29/D25 42MM
390432	1	AIR SLOT SKIRT L=1495
390433	1	AIR SLOT SKIRT L=1495 R W/HOLE
390434	1	AIR SLOT SKIRT L=1495 L W/HOLE
390458	1	WASHER D25.0/D11.0X4
390491	1	AIR BAG F.HAC CENTER SECTION
390494	1	BAG F.TWIN 60'BREAKAWAY RIGHT
390495	1	BAG F.BREAKAWAY 1.5M LEFT
390496	1	BAG F.18-20-21M HAC RIGHT
390497	1	BAG F.18-20-21M HAC LEFT
390519	1	AIR SLOT SKIRT L=2439
390520	1	AIR SLOT SKIRT L=2439 FRONT RH
390521	1	AIR SLOT SKIRT L=2439 FRONT LH
390523	1	AIR BAG F.60'HAC TWIN RIGHT
390524	1	AIR BAG F.60'HAC TWIN LEFT
420582	1	BOLT HEX 8.8 DEL M8X20 FT A2
420641	1	BOLT HM 8X35/22 A2 SS DIN931
420965	1	M10X40 MACHINE SCREW STAINLESS
421046	1	BOLT HEX M8X25/25 A2 SS DIN933
421226	1	BOLT HEX 8.8 DEL M10X45
421228	1	BOLT HEX 8.8 DEL M8X55
450939	1	CONNECTOR
460143	1	LOCK NUT M8 SST A2 DIN985
460261	1	NUT HEX M6X1.00 LOCK DIN985 A2 SS
460364	1	NUT HU M8 A2 SS DIN934
460423	1	NUT HEX M10X1.50 LOCK DIN985A2 SS
461198	1	NUT HEX M16X2 JAMB
471122	1	WASHER, M10, Ø20/10.5X 2.0, SS

parts-n°	order qty	description
471124	1	WASHER, M6, Ø18/ 6.4X 1.6, SS
471126	1	WASHER, M8, Ø16/ 8.4X 1.6, SS
471128	1	WASHER, M16, Ø30/17.0X 3.0, SS
471132	1	WASHER D24/D8.4 X 2 SS
480728	1	PIN D3.2X20 SPLIT
480730	1	SPRING DOWEL PIN 5X30 SST
615073	1	BRACKET F. AIR SLOT ANGLING
615085	1	BRACKET F.CYLINDER TWIN
615086	1	TIE ROD F.AIR OUTLET TWIN SYS.
615186	1	CONNECTING BAR F.TWIN
615187	1	BRACKET
615222	1	BRACKET F.AIR SLOT
636890	1	TUBE F.TWIN AIR SLOT HAC 66'
636891	1	TUBE F.TWIN AIR SLOT HAC 60'
636894	1	TUBE SLOTTED F.CENTER
636899	1	ARM F.HAC
636900	1	BRACKET
636992	1	INTERM PART 24M MHY/Z RIGHT
637020	1	AIR SEAL RING RIGHT 490MM
637021	1	AIR SEAL RING LEFT 490MM
637122	1	BRACKET F.AIR SLOT
637147	1	BRACKET F.COUPLING
981504	1	ELASTIC CORD 4MM
78123100	1	CYLINDER DOUBLE D40/20-120

HARDI	**Agroparts: www.HARDI-INTERNATIONAL.com**	
	BOOM-TWIN HAC 60-66 AIR/STRIPS D0640-HIN, 01:01:16	Page 0 Date 12.08.2020 11:37

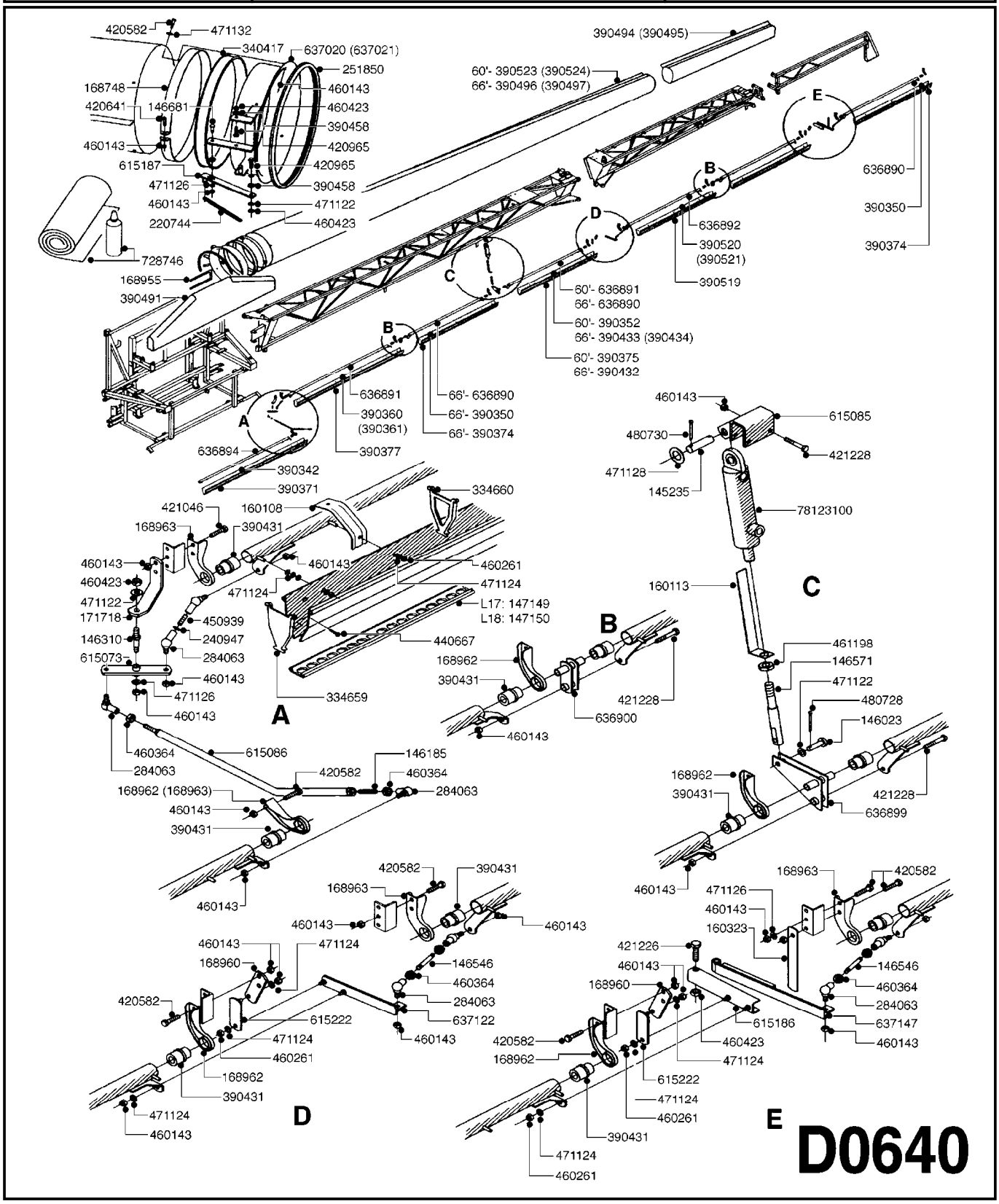

Agroparts: www.HARDI-INTERNATIONAL.com

BOOM-TWIN HAC 60-66 AIR/STRIPS
D0640-HIN, 01:01:16

Date 12.08.2020 11:38

parts-n°	order qty	description
145235	1	PIN D12 X 60
146023	1	PIN FOR COGWHEEL
146185	1	THREADED STUD
146310	1	THREADED CONN.PIN 9.9 X 63MM
146546	1	SHAFT D8 80MM
146571	1	PIN D20 X 185
146681	1	PIN D20.0 X 35/M8
147149	1	AIR SLOT 17 HOLE
147150	1	ALU.RAIL 18 HOLE
160108	1	BRACKET F.AIR SLOT TWIN
160113	1	GUIDE
160323	1	BRACKET F.AIR COUPLING
168748	1	CLAMP L=1575
168955	1	FRAME F. TWINBAG CENTER OUTLET
168960	1	BRACKET 3X30 95MM
168962	1	AIR SLOT BKT.RIGHT
168963	1	AIR SLOT BKT.LEFT
171718	1	BRACKET
220744	1	SPRING 150/25
240947	1	O-RING D7.3X2.4 NITRIL
251850	1	SEAL F.AIR OPENING TWIN 1800MM
284063	1	BALL JOINT M6 90 DEGREE
334659	1	PLATE F.ALU.TWIN AIR SLOT
334660	1	DIVIDER F.ALU.TWIN AIR SLOT
340417	1	TANK FRAME PACK.1640MM 64.5'
390342	1	AIR SLOT SKIRT L=2000 W/HOLE
390350	1	AIR SPLIT,FRONTSIDE 1500
390352	1	AIR SPLIT,FRONTSIDE 2000
390360	1	SPACE SPLIT FRONT 2M RIGHT
390361	1	SPACE SPLIT FRONT 2M LEFT
390371	1	AIR SLOT SKIRT L =2000
390374	1	AIR SLOT SKIRT L =1460
390375	1	AIR SLOT SKIRT L=1960
390377	1	AIR SLOT SKIRT L=2065
390431	1	BUSHING INST.D32/D29/D25 42MM
390432	1	AIR SLOT SKIRT L=1495
390433	1	AIR SLOT SKIRT L=1495 R W/HOLE
390434	1	AIR SLOT SKIRT L=1495 L W/HOLE
390458	1	WASHER D25.0/D11.0X4
390491	1	AIR BAG F.HAC CENTER SECTION
390494	1	BAG F.TWIN 60'BREAKAWAY RIGHT
390495	1	BAG F.BREAKAWAY 1.5M LEFT
390496	1	BAG F.18-20-21M HAC RIGHT
390497	1	BAG F.18-20-21M HAC LEFT
390519	1	AIR SLOT SKIRT L=2439
390520	1	AIR SLOT SKIRT L=2439 FRONT RH
390521	1	AIR SLOT SKIRT L=2439 FRONT LH
390523	1	AIR BAG F.60'HAC TWIN RIGHT
390524	1	AIR BAG F.60'HAC TWIN LEFT
420582	1	BOLT HEX 8.8 DEL M8X20 FT A2
420641	1	BOLT HM 8X35/22 A2 SS DIN931
420965	1	M10X40 MACHINE SCREW STAINLESS
421046	1	BOLT HEX M8X25/25 A2 SS DIN933
421226	1	BOLT HEX 8.8 DEL M10X45
421228	1	BOLT HEX 8.8 DEL M8X55
440667	1	SCREW M3.5X12 SLOT STAINLESS
450939	1	CONNECTOR
460143	1	LOCK NUT M8 SST A2 DIN985
460261	1	NUT HEX M6X1.00 LOCK DIN985 A2 SS
460364	1	NUT HU M8 A2 SS DIN934
460423	1	NUT HEX M10X1.50 LOCK DIN985A2 SS

parts-n°	order qty	description
461198	1	NUT HEX M16X2 JAMB
471122	1	WASHER, M10, Ø20/10.5X 2.0, SS
471124	1	WASHER, M6, Ø18/ 6.4X 1.6, SS
471126	1	WASHER, M8, Ø16/ 8.4X 1.6, SS
471128	1	WASHER, M16, Ø30/17.0X 3.0, SS
471132	1	WASHER D24/D8.4 X 2 SS
480728	1	PIN D3.2X20 SPLIT
480730	1	SPRING DOWEL PIN 5X30 SST
615073	1	BRACKET F. AIR SLOT ANGLING
615085	1	BRACKET F.CYLINDER TWIN
615086	1	TIE ROD F.AIR OUTLET TWIN SYS.
615186	1	CONNECTING BAR F.TWIN
615187	1	BRACKET
615222	1	BRACKET F.AIR SLOT
636890	1	TUBE F.TWIN AIR SLOT HAC 66'
636891	1	TUBE F.TWIN AIR SLOT HAC 60'
636892	1	TUBE F.TWIN AIR SLOT HAC 60/66
636894	1	TUBE SLOTTED F.CENTER
636899	1	ARM F.HAC
636900	1	BRACKET
637020	1	AIR SEAL RING RIGHT 490MM
637021	1	AIR SEAL RING LEFT 490MM
637122	1	BRACKET F.AIR SLOT
637147	1	BRACKET F.COUPLING
728746	1	TWIN AIR BAG REPAIR KIT NEW
78123100	1	CYLINDER DOUBLE D40/20-120

BOOM - TF INNER WING HAZ 80/90
D0650-HIN, 01:01:16

Date 12.08.2020 11:38

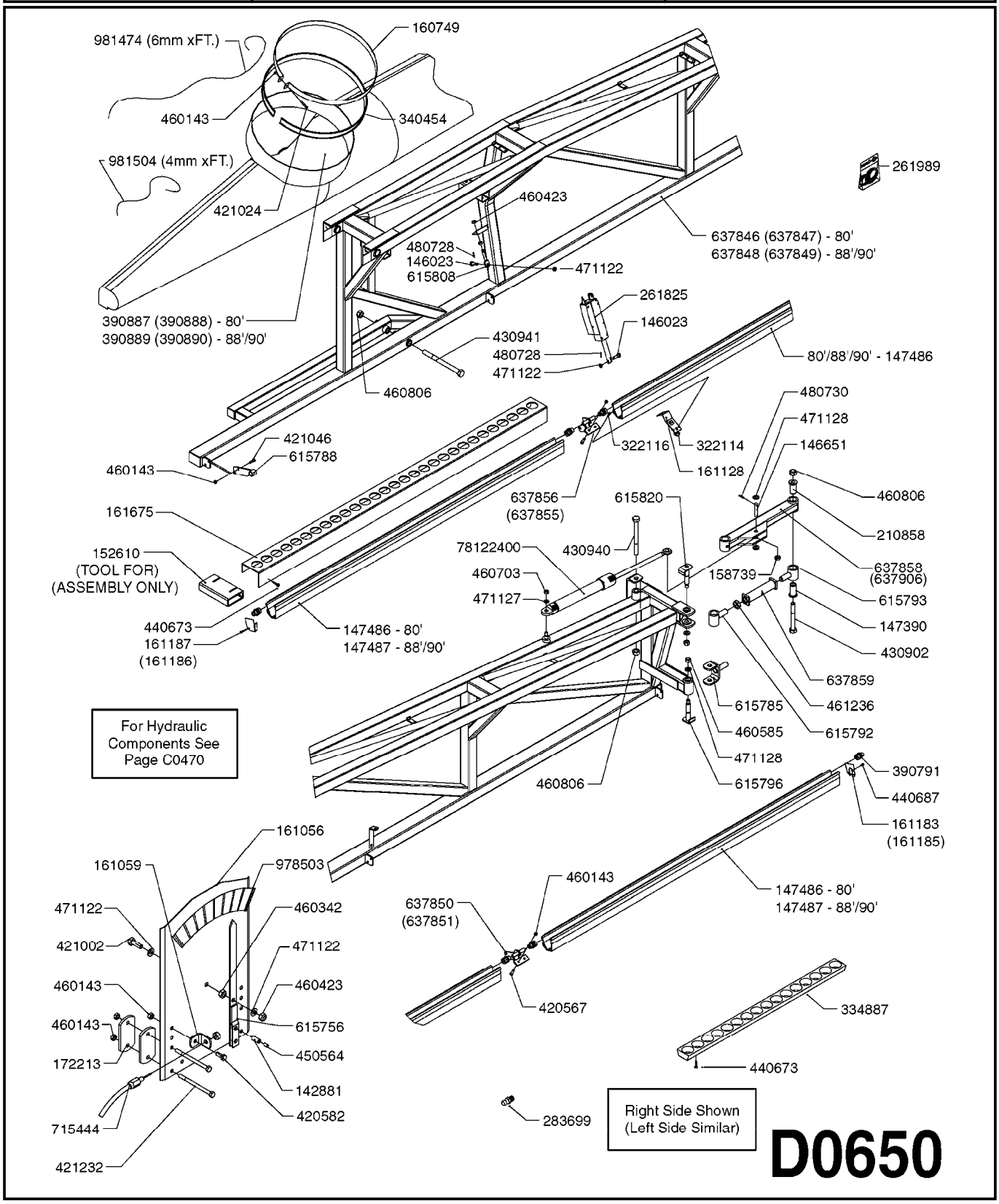

Agroparts: www.HARDI-INTERNATIONAL.com

BOOM - TF INNER WING HAZ 80/90
D0650-HIN, 01:01:16

Date 12.08.2020 11:38

parts-n°	order qty	description
142881	1	WIRE HOLDER FOR REMOTE CONTROL
146023	1	PIN FOR COGWHEEL
146651	1	PIN
147390	1	BUSHING
147486	1	AIR SLOT RAIL L=1995/D25
147487	1	AIR SLOT RAIL L=2495/D25
152610	1	TOOL - 50X20X2.0, L=90
158739	1	BUSHING 3/4"X10
160749	1	BAND METAL F.AIR BAG
161056	1	PLATE F. TILT INDICATOR
161059	1	BRACKET F.TILT INDICATOR CABLE
161128	1	NOZZLE HOLDER TF
161183	1	AIR SLOT END RH
161185	1	AIR SLOT END LH
161186	1	AIR SLOT END LH
161187	1	AIR SLOT END RH
161675	1	AIR DIFFUSER L=1870 R.H.
172213	1	FLAT BAR F.BOOM STRAP
210858	1	BUSHING 034/30 L=20
261825	1	ACTUATOR HAZ 2 WIRE
261989	1	SPARE PARTS KIT/BOOM ACTUATOR
283699	1	GREASE NIPPLE M6X1
322114	1	NUT PLASTIC F.NOZZ.H
322116	1	BOLT PLASTIC F.NOZZ.H.
334887	1	AIRGUIDE TWIN FORCE L=494
340454	1	TANK STRAP PACKING 40X2140
390791	1	BUSHING F. AIR SLOT
390887	1	AIR BAG F.80' HAZ FORCE RIGHT
390888	1	AIR BAG F.80' HAZ FORCE LEFT
390889	1	AIR BAG F.88'-90' HAZ FORCE RH
390890	1	AIR BAG F.88'-90' HAZ FORCE LH
420567	1	BOLT HEX 8.8 DEL M8X30 FT
420582	1	BOLT HEX 8.8 DEL M8X20 FT A2
421002	1	BOLT HEX 8.8 DEL M10X30 FT DIN933
421024	1	BOLT HEX 8.8 DEL M8X60
421046	1	BOLT HEX M8X25/25 A2 SS DIN933
421232	1	BOLT HEX 8.8 DEL M8X110
430902	1	BOLT HEX 8.8 M20X150
430940	1	BOLT M20X210 8.8 DEL.
430941	1	BOLT M20X260 8.8 DEL.
440673	1	SCREW F.PLASTIC 5X12 SS
440687	1	SCREW 4.2X13.0
450564	1	SCREW M6X12 ALLEN
460143	1	LOCK NUT M8 SST A2 DIN985
460342	1	NUT HEX M10 DEL DIN934
460423	1	NUT HEX M10X1.50 LOCK DIN985A2 SS
460585	1	LOCKING NUT M16 DIN985 A2 SS
460703	1	NUT HEX M12X1.75 LOCK DIN985A2 SS
460806	1	NUT HEX M20X2.50 LOCK DIN985A2 SS
461236	1	NUT HEX M24X1.5
471122	1	WASHER, M10, Ø20/10.5X 2.0, SS
471127	1	WASHER, M12, Ø24/13X24X2.5 SS
471128	1	WASHER, M16, Ø30/17.0X 3.0, SS
480728	1	PIN D3.2X20 SPLIT
480730	1	SPRING DOWEL PIN 5X30 SST
615756	1	INDICATOR ARROW
615785	1	LINK EYE
615788	1	BRACKET
615792	1	LINK EYE M24 RH THREAD
615793	1	LINK EYE M24 LH THREADS
615796	1	PIN D20 X M16 L=119MM

parts-n°	order qty	description
615808	1	ANCHOR ADJ.F.ACTUATOR
615820	1	PIN D20 X M16 L=127MM
637846	1	WING INNER 60'-66'-80'RH
637847	1	WING INNER 60'-66'-80'LH
637848	1	WING INNER 88'-90'RH
637849	1	WING INNER 88'-90'LH
637850	1	BKT AIR SLOT RH
637851	1	BKT AIR SLOT LH
637855	1	BKT AIR SLOT LH
637856	1	BKT AIR SLOT RH
637858	1	LINK ARM HAZ OUTER WING RH
637859	1	TURN BUCKLE
637906	1	LINK ARM HAZ OUTER WING LH
715444	1	REMOTE CONTROL CABLE L=2000
978503	1	DECAL TILT SCALE TWIN FORCE
981474	1	6MM ELASTIC CORD X M
981504	1	ELASTIC CORD 4MM
78122400	1	DOUBLE CYLINDER D 40/20-300

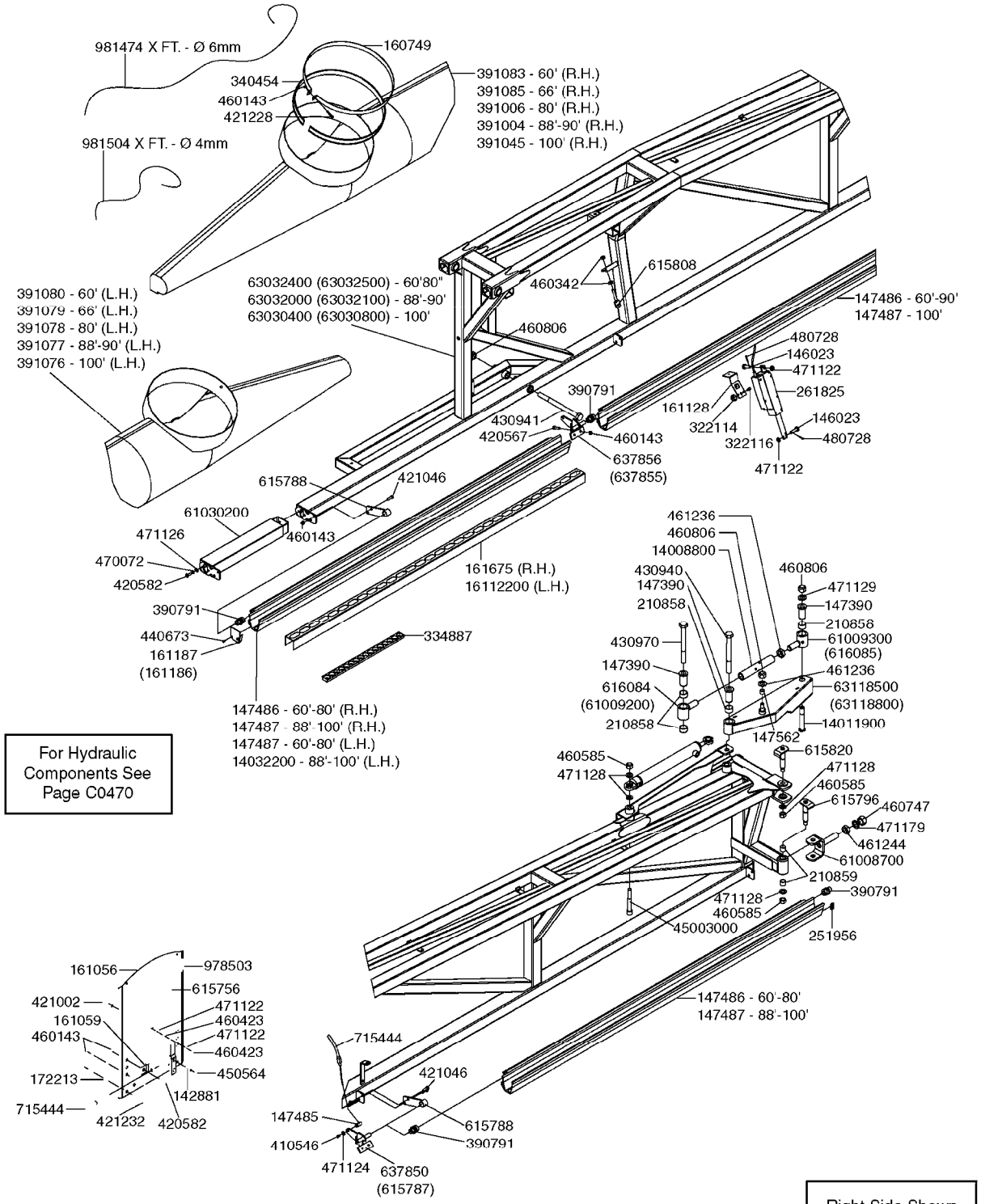
981474 X FT. - Ø 6mm
160749
340454
460143
421228
391083 - 60' (R.H.)
391085 - 66' (R.H.)
391006 - 80' (R.H.)
391004 - 88'-90' (R.H.)
391045 - 100' (R.H.)
981504 X FT. - Ø 4mm
615808
63032400 (63032500) - 60'80"
63032000 (63032100) - 88'-90'
63030400 (63030800) - 100'
460342
147486 - 60'-90'
147487 - 100'
391080 - 60' (L.H.)
391079 - 66' (L.H.)
391078 - 80' (L.H.)
391077 - 88'-90' (L.H.)
391076 - 100' (L.H.)
460806
480728
146023
471122
261825
390791
161128
322114
322116
146023
480728
471122
430941
420567
460143
637856
(637855)
615788
421046
61030200
460143
471126
470072
420582
161675 (R.H.)
16112200 (L.H.)
390791
440673
161187
(161186)
334887
147486 - 60'-80' (R.H.)
147487 - 88'-100' (R.H.)
147487 - 60'-80' (L.H.)
14032200 - 88'-100' (L.H.)
461236
460806
14008800
430940
147390
210858
460806
471129
147390
210858
61009300
(616085)
430970
147390
616084
(61009200)
210858
461236
63118500
(63118800)
14011900
147562
615820
460585
471128
471128
460585
615796
460747
471179
461244
61008700
210859
390791
471128
460585
45003000
251956
147486 - 60'-80'
147487 - 88'-100'
For Hydraulic Components See Page C0470
161056
978503
615756
421002
471122
161059
460423
460143
471122
460423
172213
450564
142881
715444
421232
420582
715444
421046
147485
615788
410546
390791
471124
637850
(615787)
Right Side Shown
(Left Side Similar)

D0660

Agroparts: www.HARDI-INTERNATIONAL.com

BOOM-TF INNER HAZ-WC 60'-100'
D0660-HIN, 01:01:16

Date 12.08.2020 11:38

parts-n°	order qty	description
142881	1	WIRE HOLDER FOR REMOTE CONTROL
146023	1	PIN FOR COGWHEEL
147390	1	BUSHING
147485	1	BUSHING Ø13.0/M6 L=31/Ø4.2/Ø10
147486	1	AIR SLOT RAIL L=1995/D25
147487	1	AIR SLOT RAIL L=2495/D25
147562	1	BUSHING D19.8/17.0 L=15
160749	1	BAND METAL F.AIR BAG
161056	1	PLATE F. TILT INDICATOR
161059	1	BRACKET F.TILT INDICATOR CABLE
161128	1	NOZZLE HOLDER TF
161186	1	AIR SLOT END LH
161187	1	AIR SLOT END RH
161675	1	AIR DIFFUSER L=1870 R.H.
172213	1	FLAT BAR F.BOOM STRAP
210858	1	BUSHING 034/30 L=20
210859	1	BUSH Ø23X20 L20
251956	1	RUBBER SEAL 60MM
261825	1	ACTUATOR HAZ 2 WIRE
322114	1	NUT PLASTIC F.NOZZ.H
322116	1	BOLT PLASTIC F.NOZZ.H.
334887	1	AIRGUIDE TWIN FORCE L=494
340454	1	TANK STRAP PACKING 40X2140
390791	1	BUSHING F. AIR SLOT
391004	1	AIR BAG F.88/90' HAZ PVC RIGHT
391006	1	AIR BAG F.80' HAZ PVC RIGHT
391045	1	AIR BAG F.100' HAZ PVC RIGHT
391076	1	AIR BAG F.100' HAZ PVC LEFT
391077	1	AIR BAG F.88/90' HAZ PVC LEFT
391078	1	AIR BAG F.80' HAZ PVC LEFT
391079	1	AIR BAG F.66' HAZ PVC LEFT
391080	1	AIR BAG F.60' HAZ PVC LEFT
391083	1	AIR BAG F.60' HAZ PVC RIGHT
391085	1	AIR BAG F.66' HAZ PVC RIGHT
410546	1	BOLT HEX M6X12 A2 SS DIN933
420567	1	BOLT HEX 8.8 DEL M8X30 FT
420582	1	BOLT HEX 8.8 DEL M8X20 FT A2
421002	1	BOLT HEX 8.8 DEL M10X30 FT DIN933
421046	1	BOLT HEX M8X25/25 A2 SS DIN933
421228	1	BOLT HEX 8.8 DEL M8X55
421232	1	BOLT HEX 8.8 DEL M8X110
430940	1	BOLT M20X210 8.8 DEL.
430941	1	BOLT M20X260 8.8 DEL.
430970	1	BOLT HEX M20X120 DIN931- DEL
440673	1	SCREW F.PLASTIC 5X12 SS
450564	1	SCREW M6X12 ALLEN
460143	1	LOCK NUT M8 SST A2 DIN985
460342	1	NUT HEX M10 DEL DIN934
460423	1	NUT HEX M10X1.50 LOCK DIN985A2 SS
460585	1	LOCKING NUT M16 DIN985 A2 SS
460747	1	NUT HEX M24 LOCK
460806	1	NUT HEX M20X2.50 LOCK DIN985A2 SS
461236	1	NUT HEX M24X1.5
461244	1	NUT HEX M24X3 JAMB.
470072	1	WASHER D15/D8X.5 LOCK
471122	1	WASHER, M10, Ø20/10.5X 2.0, SS
471124	1	WASHER, M6, Ø18/ 6.4X 1.6, SS
471126	1	WASHER, M8, Ø16/ 8.4X 1.6, SS
471128	1	WASHER, M16, Ø30/17.0X 3.0, SS
471129	1	WASHER, M20, Ø37/21.0X 3.0, SS
471179	1	LOCK WASHER NORDLOCK M24 ELZ

parts-n°	order qty	description
480728	1	PIN D3.2X20 SPLIT
615756	1	INDICATOR ARROW
615787	1	COUPLING F.AIRSLOT TWINF. LH
615788	1	BRACKET
615796	1	PIN D20 X M16 L=119MM
615808	1	ANCHOR ADJ.F.ACTUATOR
615820	1	PIN D20 X M16 L=127MM
616084	1	EYEBOLT LH TRD./ RH WING M24
		EYEBOLT WITH L.H. THREADS FOR RIGHT WING
616085	1	EYEBOLT STD. TRD./ LH WING M24
		EYEBOLT WITH STD. THREADS FOR LEFT WING
637850	1	BKT AIR SLOT RH
637855	1	BKT AIR SLOT LH
637856	1	BKT AIR SLOT RH
715444	1	REMOTE CONTROL CABLE L=2000
978503	1	DECAL TILT SCALE TWIN FORCE
981474	1	6MM ELASTIC CORD X M
981504	1	ELASTIC CORD 4MM
14008800	1	TURNBUCKLE L=200/M24X1.5
14011900	1	PIN M20 L=125/D30
14032200	1	AIR SLOT RAIL L=2995/D25
16112200	1	AIR DIFFUSER L=2365 L.H.
45003000	1	BOLT HEX M16X120 DIN912/DELTA
61008700	1	LINK EYE FORCE
61009200	1	EYEBOLT LH TRD./ LH WING M24
		EYEBOLT WITH L.H. THREADS FOR LEFT WING
61009300	1	EYEBOLT STD.TRD. / RH WING M24
		EYEBOLT WITH STD. THREADS FOR RIGHT WING
61030200	1	EXTENSION TWIN FORCE-ON CENTER
63030400	1	WING INNER HAZ 100' R.H.
63030800	1	WING INNER HAZ 100' L.H.
63032000	1	WING INNER HAZ 88'-90' R.H.
63032100	1	WING INNER HAZ 88'-90' L.H.
63032400	1	WING INNER HAZ 60'-80' R.H.
63032500	1	WING INNER HAZ 60'-80' L.H.
63118500	1	FOLDING ARM 1. FTZ / HAZ. R. RED
		FOLD ARM FOR RIGHT WING
63118800	1	FOLDING ARM 1. FTZ / HAZ. L RED
		FOLD ARM FOR LEFT WING

BOOM - TF OUTER WING HAZ 80/90
D0670-HIN, 01:01:16

Date 12.08.2020 11:38

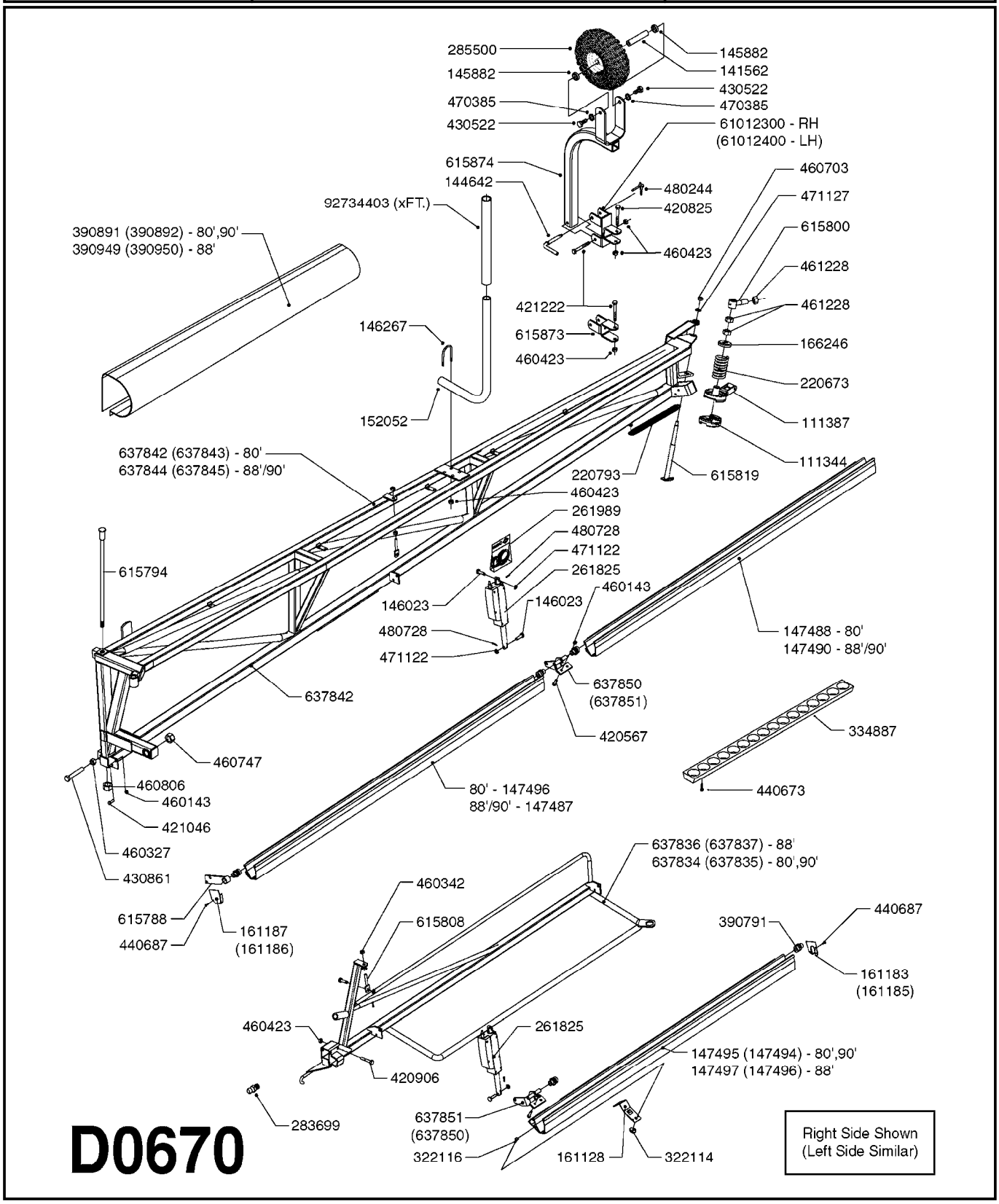

Agroparts: www.HARDI-INTERNATIONAL.com

BOOM - TF OUTER WING HAZ 80/90
D0670-HIN, 01:01:16

Date 12.08.2020 11:38

parts-n°	order qty	description
111344	1	CLAW CLUTCH Ø100/Ø20,5 UNDER PART RED
111387	1	CLAW CLUTCH D100 UPPER PART
141562	1	FRONTWHEEL AXLE 3 WHEEL
144642	1	LOCKING PAWL D10X65MM
145882	1	BUSHING D30/D21X7
146023	1	PIN FOR COGWHEEL
146267	1	BOLT U F.500 EAG BRACE
147487	1	AIR SLOT RAIL L=2495/D25
147488	1	AIR SLOT RAIL L=1935/D25
147490	1	AIR SLOT RAIL L=2435/D25
147494	1	AIR SLOT RAIL L=1730/D25 LEFT
147495	1	AIR SLOT RAIL L=1730/D25 RIGHT
147496	1	AIR SLOT RAIL L=1230/D25 LEFT
147497	1	AIR SLOT RAIL L=1230/D25 RIGHT
152052	1	BUMPER ARM 1" X 30"
161128	1	NOZZLE HOLDER TF
161183	1	AIR SLOT END RH
161185	1	AIR SLOT END LH
161186	1	AIR SLOT END LH
161187	1	AIR SLOT END RH
166246	1	WASHER CUP D53 F.SPRING
220673	1	SPRING F.PIVOT 100 X 51
220793	1	SPRING D21/D4X250MM
261825	1	ACTUATOR HAZ 2 WIRE
261989	1	SPARE PARTS KIT/BOOM ACTUATOR
283699	1	GREASE NIPPLE M6X1
285500	1	WHEEL F.BOOM SUPPORT 85X20
322114	1	NUT PLASTIC F.NOZZ.H
322116	1	BOLT PLASTIC F.NOZZ.H.
334887	1	AIRGUIDE TWIN FORCE L=494
390791	1	BUSHING F. AIR SLOT
390891	1	AIR BAG F.BREAKAWAY HAZ RH
390892	1	AIR BAG F.BREAKAWAY HAZ LH
390949	1	AIR BAG F.BREAKAWAY HAZ RH 88'
390950	1	AIR BAG F.BREAKAWAY HAZ LH 88'
420567	1	BOLT HEX 8.8 DEL M8X30 FT
420825	1	BOLT HEX 8.8 DEL M10X65
420906	1	BOLT HEX 8.8 DEL M10X60
421046	1	BOLT HEX M8X25/25 A2 SS DIN933
421222	1	BOLT HEX 8.8 DEL M10X75 FT
430522	1	BOLT HEX 8.8 DEL M12X25 FT
430861	1	BOLT HEX 8.8 DEL M16X100 FT
440673	1	SCREW F.PLASTIC 5X12 SS
440687	1	SCREW 4.2X13.0
460143	1	LOCK NUT M8 SST A2 DIN985
460327	1	NUT HEX M16X2
460342	1	NUT HEX M10 DEL DIN934
460423	1	NUT HEX M10X1.50 LOCK DIN985A2 SS
460703	1	NUT HEX M12X1.75 LOCK DIN985A2 SS
460747	1	NUT HEX M24 LOCK
460806	1	NUT HEX M20X2.50 LOCK DIN985A2 SS
461228	1	NUT HEX M20
470385	1	WASHER D14.8D8.1X2 LOCK GALV.
471122	1	WASHER, M10, Ø20/10.5X 2.0, SS
471127	1	WASHER, M12, Ø24/13X24X2.5 SS
480244	1	PIN SNAP D4.5
480728	1	PIN D3.2X20 SPLIT
615788	1	BRACKET
615794	1	AXLE FOR OUTER WING D30/20 700
615800	1	LINK EYE BR.WING
615808	1	ANCHOR ADJ.F.ACTUATOR

parts-n°	order qty	description
615819	1	PIN
615873	1	MOUNT BRKT -BOOM WHEEL HAZ
615874	1	ARM F.BOOM WHEEL HAZ
637834	1	WING BR.AWAY 80'-90' RH
637835	1	WING BR.AWAY 80'-90' LH
637836	1	WING BR.AWAY 60'-66'-88' RH
637837	1	WING BR.AWAY 60'-66'-88' LH
637842	1	WING OUTER 80'RH
637843	1	WING OUTER 80'LH
637844	1	WING OUTER 88'-90'RH
637845	1	WING OUTER 88'-90'LH
637850	1	BKT AIR SLOT RH
637851	1	BKT AIR SLOT LH
61012300	1	BRKT-BOOM WHEEL HAZ 66-80',6°R
61012400	1	BRKT-BOOM WHEEL HAZ 66-80',6°L
92734403	1	HOSE R X5/4" X200PSI WP X0012"

BOOM-TF OUTER HAZ-WC 60'-100'
D0680-HIN, 01:01:16

Date 12.08.2020 11:38

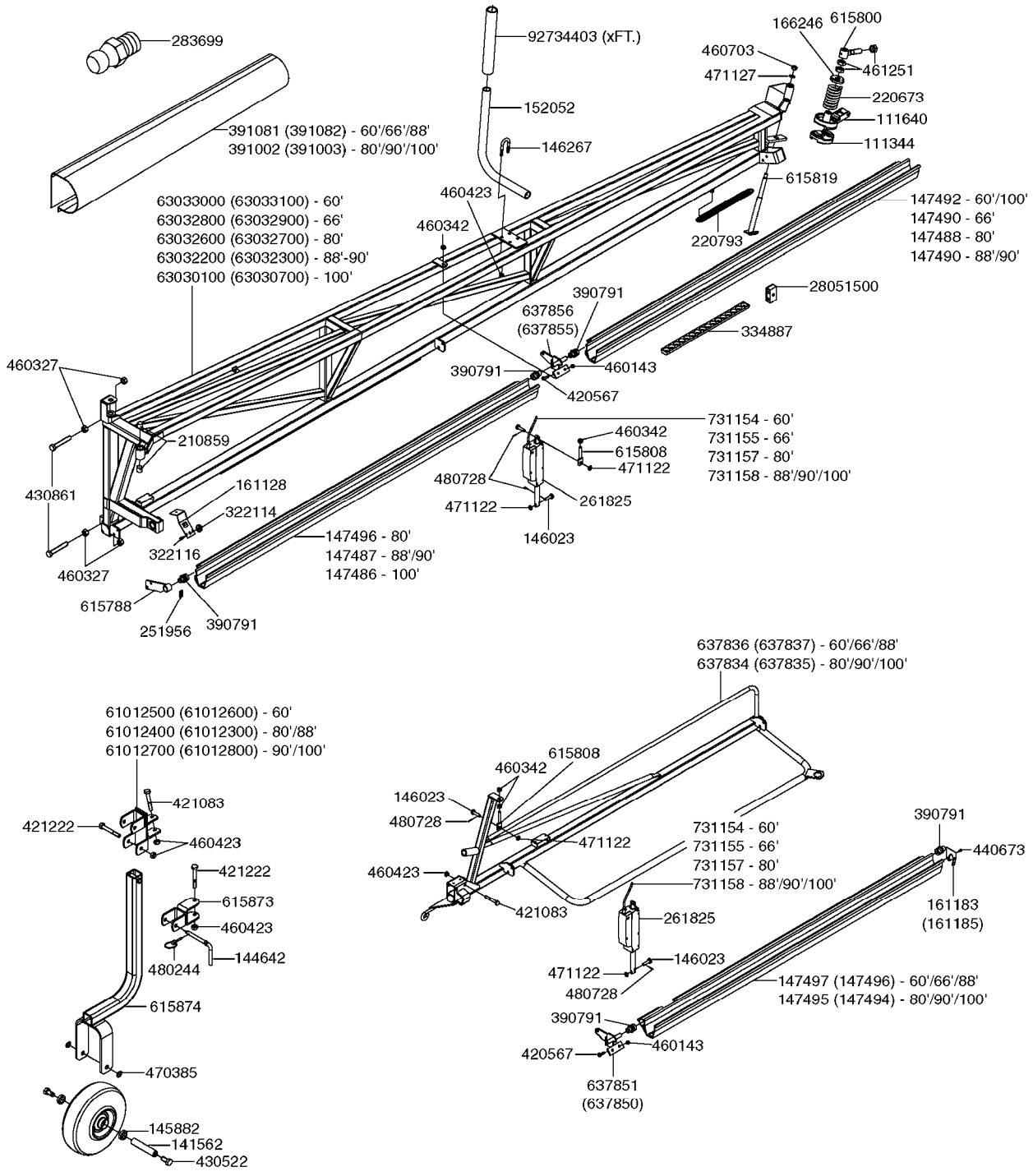

Right Side Shown
(Left Side Similar)

D0680

Agroparts: www.HARDI-INTERNATIONAL.com

BOOM-TF OUTER HAZ-WC 60'-100'
D0680-HIN, 01:01:16

Date 12.08.2020 11:38

parts-n°	order qty	description
111344	1	CLAW CLUTCH Ø100/Ø20,5 UNDER PART RED
111640	1	CLAW CLUTCH Ø100 TOP PART RED
141562	1	FRONTWHEEL AXLE 3 WHEEL
144642	1	LOCKING PAWL D10X65MM
145882	1	BUSHING D30/D21X7
146023	1	PIN FOR COGWHEEL
146267	1	BOLT U F.500 EAG BRACE
147486	1	AIR SLOT RAIL L=1995/D25
147487	1	AIR SLOT RAIL L=2495/D25
147488	1	AIR SLOT RAIL L=1935/D25
147490	1	AIR SLOT RAIL L=2435/D25
147492	1	AIR SLOT RAIL L=1435/D25
147494	1	AIR SLOT RAIL L=1730/D25 LEFT
147495	1	AIR SLOT RAIL L=1730/D25 RIGHT
147496	1	AIR SLOT RAIL L=1230/D25 LEFT
147497	1	AIR SLOT RAIL L=1230/D25 RIGHT
152052	1	BUMPER ARM 1" X 30"
161128	1	NOZZLE HOLDER TF
161183	1	AIR SLOT END RH
161185	1	AIR SLOT END LH
166246	1	WASHER CUP D53 F.SPRING
210859	1	BUSH Ø23X20 L20
220673	1	SPRING F.PIVOT 100 X 51
220793	1	SPRING D21/D4X250MM
251956	1	RUBBER SEAL 60MM
261825	1	ACTUATOR HAZ 2 WIRE
283699	1	GREASE NIPPLE M6X1
322114	1	NUT PLASTIC F.NOZZ.H
322116	1	BOLT PLASTIC F.NOZZ.H.
334887	1	AIRGUIDE TWIN FORCE L=494
390791	1	BUSHING F. AIR SLOT
391002	1	AIR BAG F.BKWY 2M HAZ PVC RH
391003	1	AIR BAG F.BKWY 2M HAZ PVC LH
391081	1	AIR BAG F.BKWY 1.5M HAZ PVC RH
391082	1	AIR BAG F.BKWY 1.5M HAZ PVC LH
420567	1	BOLT HEX 8.8 DEL M8X30 FT
421083	1	BOLT HEX 8.8 DEL M10X65
421222	1	BOLT HEX 8.8 DEL M10X75 FT
430522	1	BOLT HEX 8.8 DEL M12X25 FT
430861	1	BOLT HEX 8.8 DEL M16X100 FT
440673	1	SCREW F.PLASTIC 5X12 SS
460143	1	LOCK NUT M8 SST A2 DIN985
460327	1	NUT HEX M16X2
460342	1	NUT HEX M10 DEL DIN934
460423	1	NUT HEX M10X1.50 LOCK DIN985A2 SS
460703	1	NUT HEX M12X1.75 LOCK DIN985A2 SS
461251	1	NUT HEX M20 X 2.5 JAMB
470385	1	WASHER D14.8D8.1X2 LOCK GALV.
471122	1	WASHER, M10, Ø20/10.5X 2.0, SS
471127	1	WASHER, M12, Ø24/13X24X2.5 SS
480244	1	PIN SNAP D4.5
480728	1	PIN D3.2X20 SPLIT
615788	1	BRACKET
615800	1	LINK EYE BR.WING
615808	1	ANCHOR ADJ.F.ACTUATOR
615819	1	PIN
615873	1	MOUNT BRKT -BOOM WHEEL HAZ
615874	1	ARM F.BOOM WHEEL HAZ
637834	1	WING BR.AWAY 80'-90' RH
637835	1	WING BR.AWAY 80'-90' LH
637836	1	WING BR.AWAY 60'-66'-88' RH

parts-n°	order qty	description
637837	1	WING BR.AWAY 60'-66'-88' LH
637850	1	BKT AIR SLOT RH
637851	1	BKT AIR SLOT LH
637855	1	BKT AIR SLOT LH
637856	1	BKT AIR SLOT RH
731154	1	WIRE 2X1,5KV L=10900
731155	1	WIRE 2X1,5KV L=12400
731157	1	WIRE 2X1,5KV L=13900
731158	1	WIRE 2X1,5KV L=15900
28051500	1	PIPE HOLDER DOUBLE FOR D6
61012300	1	BRKT-BOOM WHEEL HAZ 66-80',6°R
61012400	1	BRKT-BOOM WHEEL HAZ 66-80',6°L
61012500	1	BRKT-BOOM WHEEL HAZ 60',14° R
61012600	1	BRKT-BOOM WHEEL HAZ 60',14° L
61012700	1	BRKT-BOOMWHL HAZ88-100,3°R
61012800	1	BRKT-BOOMWHL HAZ88-100,3°L
63030100	1	WING OUTER 100' HAZ R.H.
63030700	1	WING OUTER 100' HAZ L.H.
63032200	1	WING OUTER 88'-90' HAZ R.H.
63032300	1	WING OUTER 88'-90' HAZ L.H.
63032600	1	WING OUTER 80' HAZ R.H.
63032700	1	WING OUTER 80' HAZ L.H.
63032800	1	WING OUTER 66' HAZ R.H.
63032900	1	WING OUTER 66' HAZ L.H.
63033000	1	WING OUTER 60' HAZ R.H.
63033100	1	WING OUTER 60' HAZ L.H.
92734403	1	HOSE R X5/4" X200PSI WP X0012"

BOOM TWIN FORCE HAZ CENTER
D0690-HIN, 08:09:16

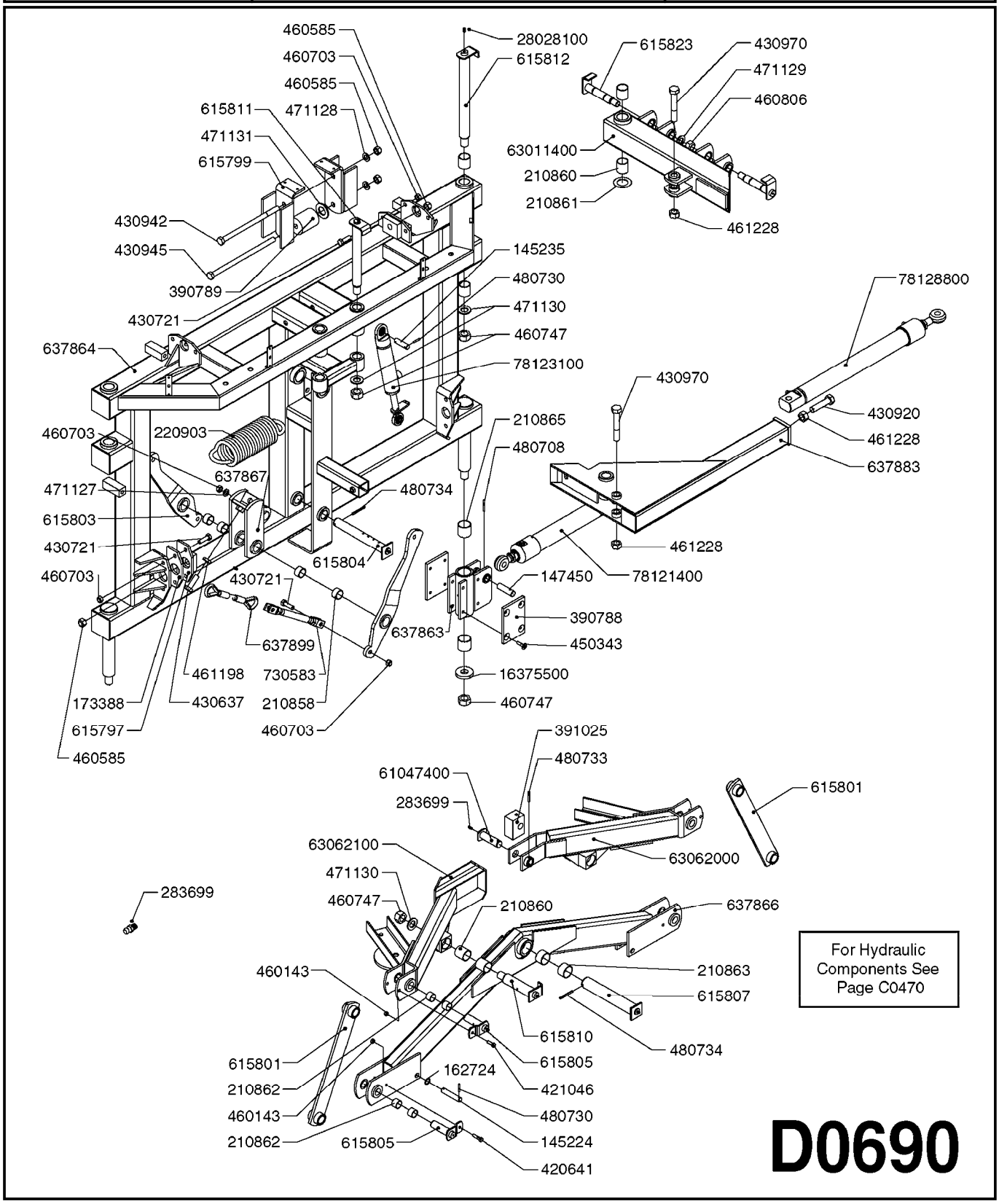

Agroparts: www.HARDI-INTERNATIONAL.com

BOOM TWIN FORCE HAZ CENTER
D0690-HIN, 08:09:16

Date 12.08.2020 11:38

parts-n°	order qty	description
145224	1	SHAFT FOR HY CYLINDER
145235	1	PIN D12 X 60
147450	1	PIN D20 X 70
162724	1	WASHER D25/D18.1X1
173388	1	SPACER PLATE F.LINK ARM
210858	1	BUSHING 034/30 L=20
210860	1	BUSHING
210861	1	BUSHING
210862	1	BUSHING 28X25X20
210863	1	BUSHING DU FLNG. D40/44 L=26
210865	1	BUSHING 40mm40mm DU
220903	1	SPRING 100/12 304MM
283699	1	GREASE NIPPLE M6X1
390788	1	TEFLON WARE PAD
390789	1	RUBBER DAMPENER D63/17 L=80
391025	1	JOINER BLOCK - FORCE
420641	1	BOLT HM 8X35/22 A2 SS DIN931
421046	1	BOLT HEX M8X25/25 A2 SS DIN933
430637	1	BOLT HEX 8.8 DEL M16X50 FT
430721	1	BOLT HEX 8.8 DEL M12X40 FT
430920	1	BOLT HEX M20x80MM
430942	1	BOLT
430945	1	BOLT HEX M16X300 DIN931-8.8 DE
430970	1	BOLT HEX M20X120 DIN931- DEL
450343	1	SCREW M8X30 ALLEN HEAD C/S SS
460143	1	LOCK NUT M8 SST A2 DIN985
460585	1	LOCKING NUT M16 DIN985 A2 SS
460703	1	NUT HEX M12X1.75 LOCK DIN985A2 SS
460747	1	NUT HEX M24 LOCK
460806	1	NUT HEX M20X2.50 LOCK DIN985A2 SS
461198	1	NUT HEX M16X2 JAMB
461228	1	NUT HEX M20
471127	1	WASHER, M12, Ø24/13X24X2.5 SS
471128	1	WASHER, M16, Ø30/17.0X 3.0, SS
471129	1	WASHER, M20, Ø37/21.0X 3.0, SS
471130	1	WASHER, M24, Ø44/25.0X 4.0, SS
471131	1	WASHER, M30, Ø56/31.0X 4.0, SS
480708	1	PIN D4 X 45
480730	1	SPRING DOWEL PIN 5X30 SST
480733	1	PIN D6 X 40
480734	1	PIN CLAMP D6X60 ELZ
615797	1	CONTROL ARM MT.PLATE
615799	1	DAMPENER MT.BKT.
615801	1	TRAPEZE ARM TF
615803	1	ARM F. SPRING
615804	1	PIN
615805	1	PIN
615807	1	PIN
615810	1	PIN
615811	1	PIN
615812	1	PIN
615823	1	PIN
637863	1	HINGE F.TF LOWER
637864	1	CENTER SECTION TF
637866	1	PENDULEM SUSPENSION ARM
637867	1	SLANTING ARM
637883	1	DAMPENING ARM TF
637899	1	CABLE
730583	1	TURNBUCKLE ASSY. M16
16375500	1	WASHER 10.0X60X25 RED
28028100	1	GREASE NIPPLE 1/8'RG 90°

BOOM TWIN FORCE HAZ CENTER
D0690-HIN, 08:09:16

Date 12.08.2020 11:38

parts-n°	order qty	description
61047400	1	PIN D25 L=102.5MM
63011400	1	HINGE F.TF
63062000	1	SUSPENSION ARM RH
63062100	1	SUSPENSION ARM LH
78121400	1	DOUBLE CYLINDER D 50/30-300
78123100	1	CYLINDER DOUBLE D40/20-120
78128800	1	CYLINDER, D50/30-500

BOOM FORCE/TWIN FORCE LIFT F
D0700-HIN, 01:01:16

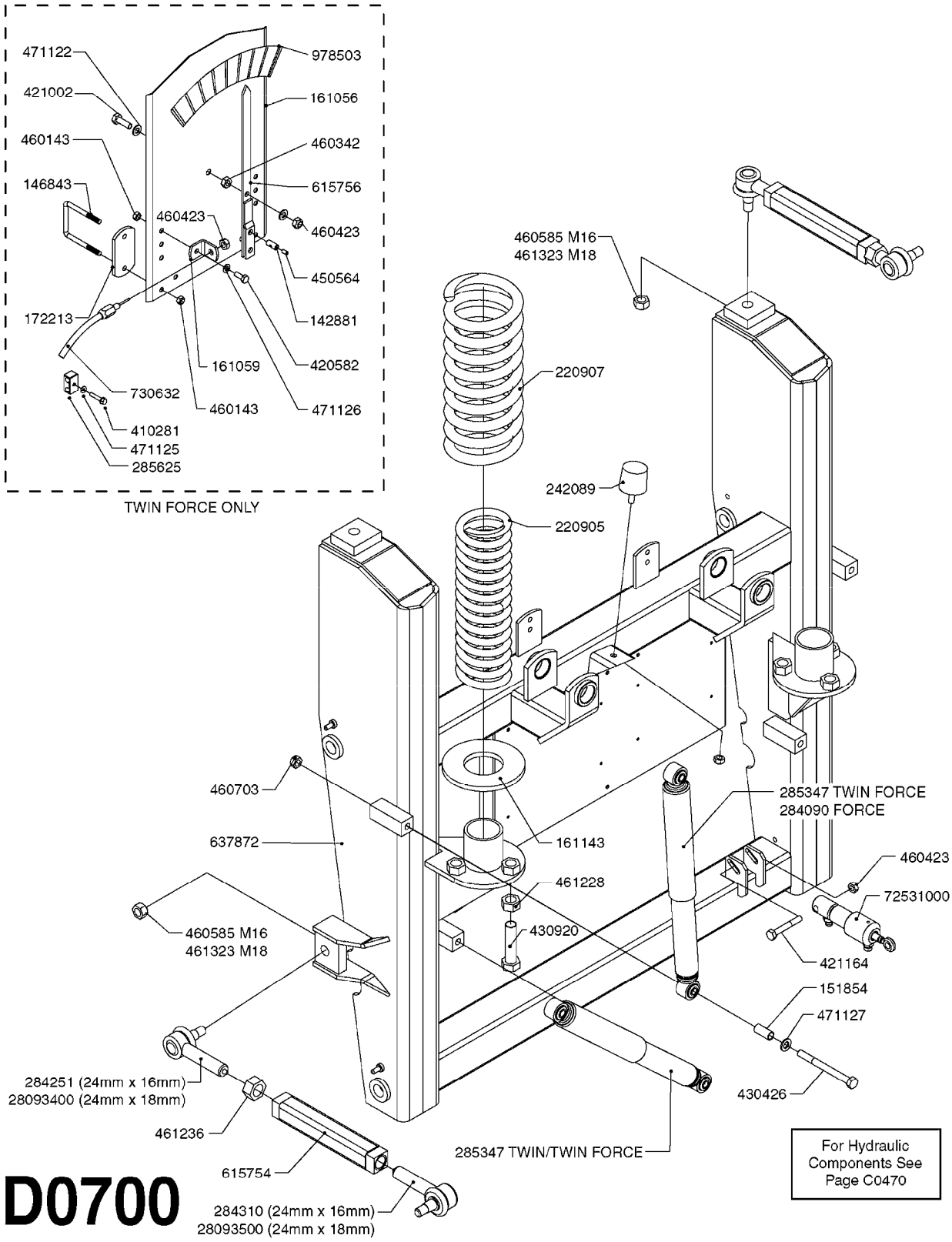

For Hydraulic Components See Page C0470

Agroparts: www.HARDI-INTERNATIONAL.com

BOOM FORCE/TWIN FORCE LIFT F
D0700-HIN, 01:01:16

Date 12.08.2020 11:38

parts-n°	order qty	description
142881	1	WIRE HOLDER FOR REMOTE CONTROL
146843	1	BOLT U M8 F.60 x 60
151854	1	BUSHING F.SHOCK
161056	1	PLATE F. TILT INDICATOR
161059	1	BRACKET F.TILT INDICATOR CABLE
161143	1	PLATE F SPRING
172213	1	FLAT BAR F.BOOM STRAP
220905	1	SPRING D101/14 BLACK
220907	1	SPRING D144/19 BLACK
242089	1	RUBBER STOP D50X40 M10
284090	1	SHOCK ABSORBER
284251	1	ROD END 25Ø (24mm x 16mm) RH
284310	1	ROD END 25Ø (24mm x 16mm) LH
285347	1	SHOCK TF
285625	1	CLAMP FOR CABLE D12MM
410281	1	BOLT HEX 8.8 DEL M6X25 DIN933 A2
420582	1	BOLT HEX 8.8 DEL M8X20 FT A2
421002	1	BOLT HEX 8.8 DEL M10X30 FT DIN933
421164	1	BOLT HEX 8.8 DEL M10X70
430426	1	BOLT HEX 8.8 DEL M12X130
430920	1	BOLT HEX M20x80MM
450564	1	SCREW M6X12 ALLEN
460143	1	LOCK NUT M8 SST A2 DIN985
460342	1	NUT HEX M10 DEL DIN934
460423	1	NUT HEX M10X1.50 LOCK DIN985A2 SS
460585	1	LOCKING NUT M16 DIN985 A2 SS
460703	1	NUT HEX M12X1.75 LOCK DIN985A2 SS
461228	1	NUT HEX M20
461236	1	NUT HEX M24X1.5
461323	1	NUT HEX M18X1.5 LOCK
471122	1	WASHER, M10, Ø20/10.5X 2.0, SS
471125	1	WASHER M6U 6.4X14X1.2,A2 SS
471126	1	WASHER, M8, Ø16/ 8.4X 1.6, SS
471127	1	WASHER, M12, Ø24/13X24X2.5 SS
615754	1	TURN BUCKLE
615756	1	INDICATOR ARROW
637872	1	LIFT CENTER SECTION TF
730632	1	REMOTE INDICATOR CABLE 106"
978503	1	DECAL TILT SCALE TWIN FORCE
28093400	1	ROD END 35Ø (24mm x 18mm) RH
28093500	1	ROD END 35Ø (24mm x 18mm) LH
72531000	1	CYL. D25/12-50/78124200 W/FITT

	Agroparts: www.HARDI-INTERNATIONAL.com	
HARDI	BOOM TF HAZ NARROW CENTER 118' D0710-HIN, 05:06:19	Page 0 Date 12.08.2020 11:38

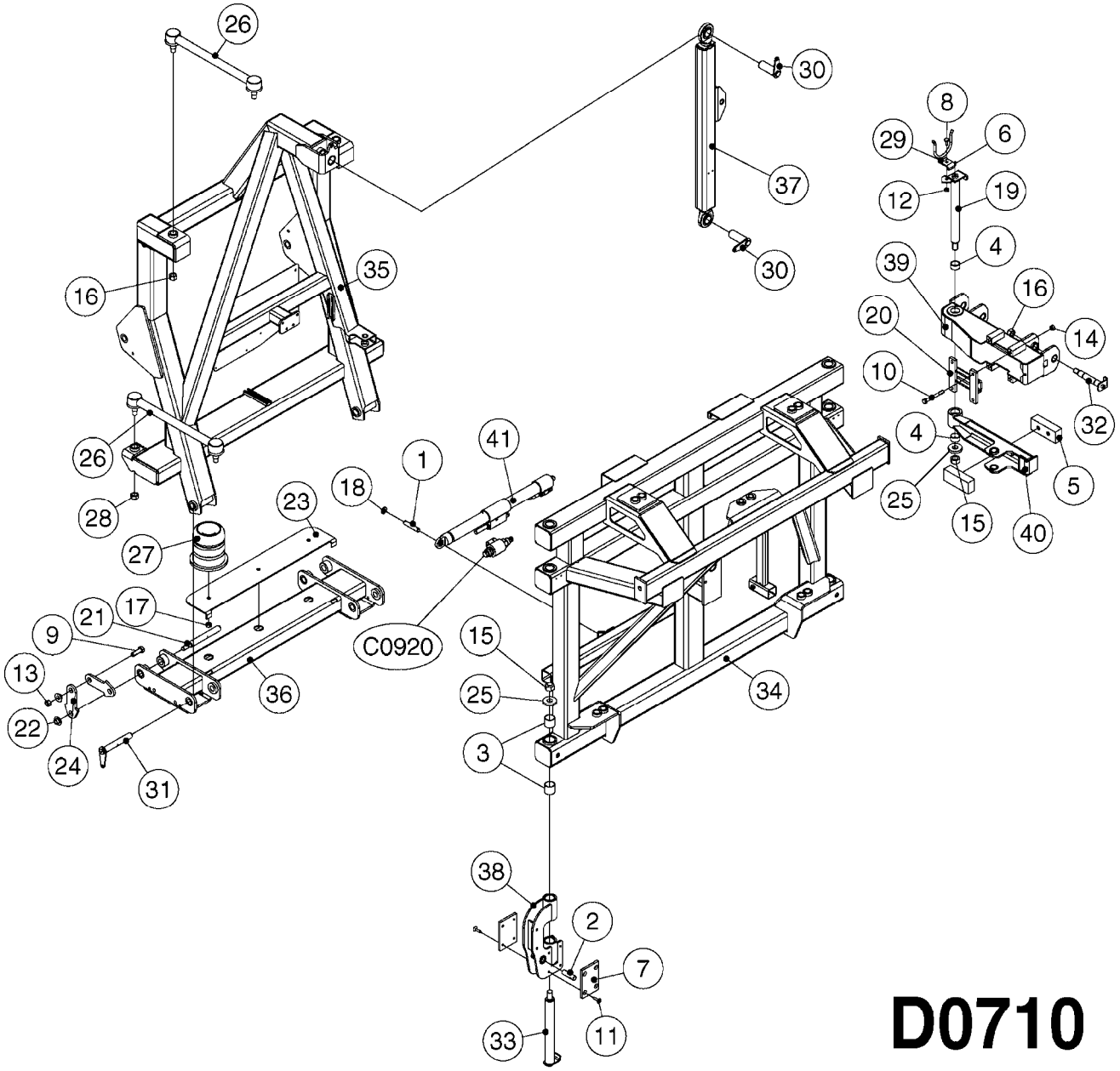

Agroparts: www.HARDI-INTERNATIONAL.com

BOOM TF HAZ NARROW CENTER 118'
D0710-HIN, 05:06:19

Date 12.08.2020 11:38

Pos.	parts-nº	order qty	description
1	145224	1	SHAFT FOR HY CYLINDER
2	147450	1	PIN D20 X 70
3	210865	1	BUSHING 40mm40mm DU
4	210866	1	BUSHING D39/35 L=20
5	242493	1	RUBBER BUMPER 60X40X150
6	283699	1	GREASE NIPPLE M6X1
7	390788	1	TEFLON WARE PAD
8	420626	1	BOLT HEX 8.8 DEL M10X20 FT
9	430637	1	BOLT HEX 8.8 DEL M16X50 FT
10	430892	1	BOLT HEX 8.8 DEL M12X110
11	450343	1	SCREW M8X30 ALLEN HEAD C/S SS
12	460423	1	NUT HEX M10X1.50 LOCK DIN985A2 SS
13	460585	1	LOCKING NUT M16 DIN985 A2 SS
14	460703	1	NUT HEX M12X1.75 LOCK DIN985A2 SS
15	460747	1	NUT HEX M24 LOCK
16	460806	1	NUT HEX M20X2.50 LOCK DIN985A2 SS
17	461253	1	NUT HEX M14 NV=22 A4 RST
18	471128	1	WASHER, M16, Ø30/17.0X 3.0, SS
19	615812	1	PIN
20	616075	1	FLANGE F. FORCE HINGE
21	14065800	1	PIN D25 L=225, M16/M6/D5
22	14065900	1	WASHER D40/22/16.5 T=13.5 DEL
23	16190500	1	BUFFER SHEET 5MM, 118' HAZ
24	16205400	1	PLATE 10.0MM, D23
25	16375500	1	WASHER 10.0X60X25 RED
26	28066100	1	STEER.ARM COMPL.2XØ35 L=19.7"
27	28076200	1	BUMPER PUR Ø140X166-M14 BLACK
28	46133500	1	NUT M20X1.5 DIN 980 V
29	61005200	1	HOSE HOLDER
30	61037600	1	PIN Ø34.8/L=94
31	61041800	1	PIN PARA LIFT Ø25 L=169
32	61041900	1	PIN D25X137/ M20 DEL.
33	61043100	1	PIN D40X341/ M24 DEL.
34	63053200	1	CENTER SECTION 118' HAZ
35	63053300	1	LIFT FRAME 118' HAZ, NCM
36	63053400	1	SUSPENSION BRACKET 118' HAZ
37	63053500	1	PENDULUM 118' HAZ
38	63053600	1	LOWER HINGE 118' HAZ
39	63053900	1	HINGE FOR 118' HAZ
40	63823800	1	INNER HINGE F.FORCE
41	78126000	1	CYLINDER,DAMPNER,LOCKING

	Agroparts: www.HARDI-INTERNATIONAL.com	
HARDI	BOOM TF INNER HAZ 2-FOLD 118' D0720-HIN, 26:11:18	Page 0 Date 12.08.2020 11:38

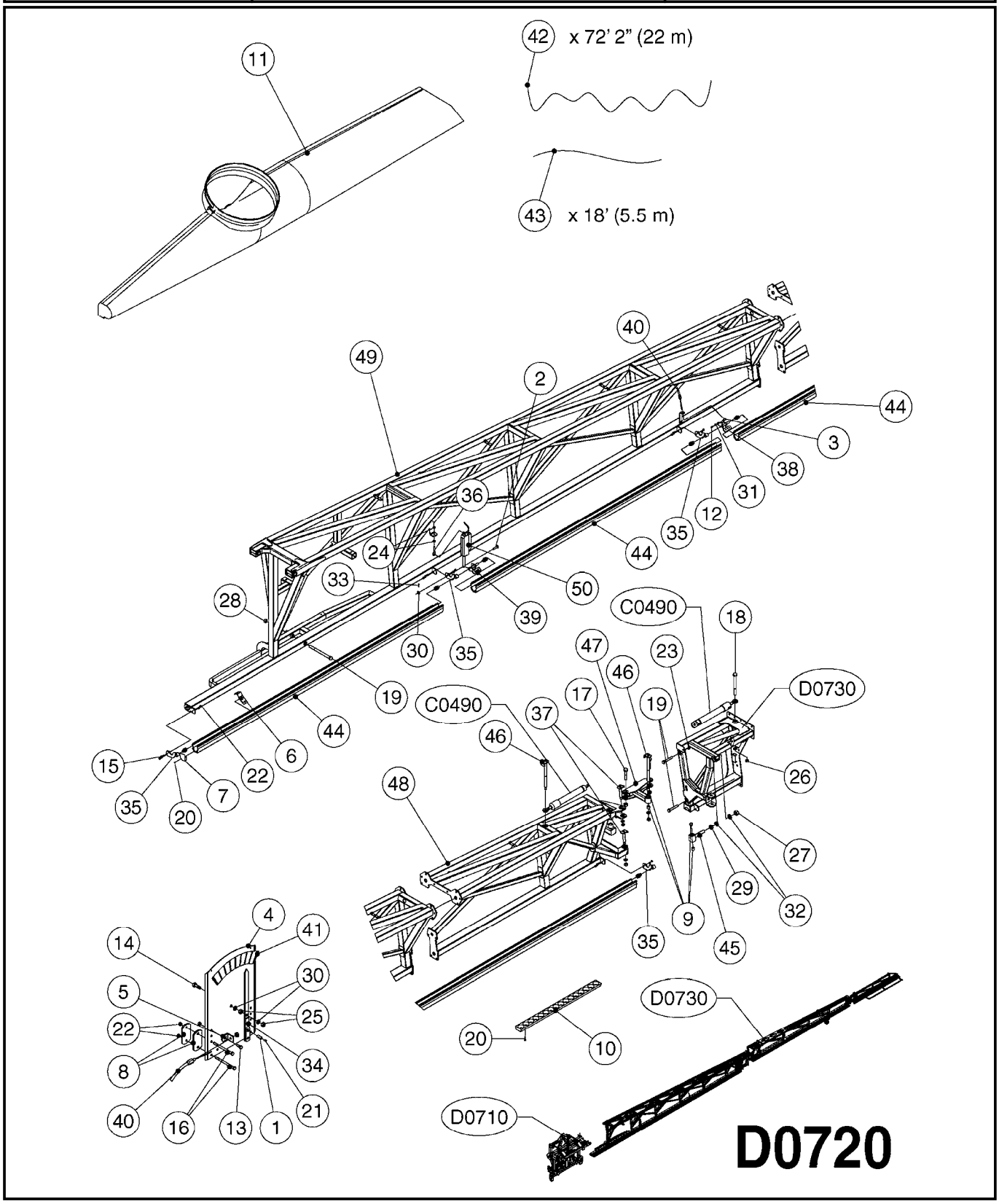

Agroparts: www.HARDI-INTERNATIONAL.com

BOOM TF INNER HAZ 2-FOLD 118'
D0720-HIN, 26:11:18

Date 12.08.2020 11:38

Pos.	parts-nº	order qty	description
1	142881	1	WIRE HOLDER FOR REMOTE CONTROL
2	146023	1	PIN FOR COGWHEEL
3	147485	1	BUSHING Ø13.0/M6 L=31/Ø4.2/Ø10
4	161056	1	PLATE F. TILT INDICATOR
5	161059	1	BRACKET F.TILT INDICATOR CABLE
6	161128	1	NOZZLE HOLDER TF
7	161186	1	AIR SLOT END LH
7	161187	1	AIR SLOT END RH
8	172213	1	FLAT BAR F.BOOM STRAP
9	210859	1	BUSH Ø23X20 L20
10	334887	1	AIRGUIDE TWIN FORCE L=494
11	391181	1	AIR BAG F.118' HAZ RIGHT
11	391182	1	AIR BAG F.118' HAZ LEFT
12	410546	1	BOLT HEX M6X12 A2 SS DIN933
13	420582	1	BOLT HEX 8.8 DEL M8X20 FT A2
14	421002	1	BOLT HEX 8.8 DEL M10X30 FT DIN933
15	421046	1	BOLT HEX M8X25/25 A2 SS DIN933
16	421232	1	BOLT HEX 8.8 DEL M8X110
17	430917	1	SCREW M20X90
18	430940	1	BOLT M20X210 8.8 DEL.
19	430941	1	BOLT M20X260 8.8 DEL.
20	440673	1	SCREW F.PLASTIC 5X12 SS
21	450564	1	SCREW M6X12 ALLEN
22	460143	1	LOCK NUT M8 SST A2 DIN985
23	460327	1	NUT HEX M16X2
24	460342	1	NUT HEX M10 DEL DIN934
25	460423	1	NUT HEX M10X1.50 LOCK DIN985A2 SS
26	460585	1	LOCKING NUT M16 DIN985 A2 SS
27	460747	1	NUT HEX M24 LOCK
28	460806	1	NUT HEX M20X2.50 LOCK DIN985A2 SS
29	461244	1	NUT HEX M24X3 JAMB.
30	471122	1	WASHER, M10, Ø20/10.5X 2.0, SS
31	471124	1	WASHER, M6, Ø18/ 6.4X 1.6, SS
32	471130	1	WASHER, M24, Ø44/25.0X 4.0, SS
33	480728	1	PIN D3.2X20 SPLIT
34	615756	1	INDICATOR ARROW
35	615788	1	BRACKET
36	615808	1	ANCHOR ADJ.F.ACTUATOR
37	615820	1	PIN D20 X M16 L=127MM
38	637850	1	BKT AIR SLOT RH
39	637855	1	BKT AIR SLOT LH
39	637856	1	BKT AIR SLOT RH
40	715444	1	REMOTE CONTROL CABLE L=2000
41	978503	1	DECAL TILT SCALE TWIN FORCE
42	981474	1	6MM ELASTIC CORD X M
43	981504	1	ELASTIC CORD 4MM
44	14032200	1	AIR SLOT RAIL L=2995/D25
45	14119700	1	RING EYE WITH THREAD
46	61041700	1	PIN D20/M16 L=287
47	63052800	1	T-PIVOT, 118' HAZ TWIN
48	63052900	1	IN.WING/OUTER PART 118' HAZ R.
48	63053000	1	IN.WING/OUTER PART 118' HAZ L.
49	63215800	1	INNERWING 32-36M HAZ R. PAINT
49	63216000	1	INNERWING 32-36M HAZ L. PAINT
50	72058900	1	ACTUATOR,0-130MM,0-12V, 4 WIRE

	Agroparts: www.HARDI-INTERNATIONAL.com	
HARDI	BOOM TF OUTER HAZ 2-FOLD 118' D0730-HIN, 11:12:17	Page 0 Date 12.08.2020 11:38

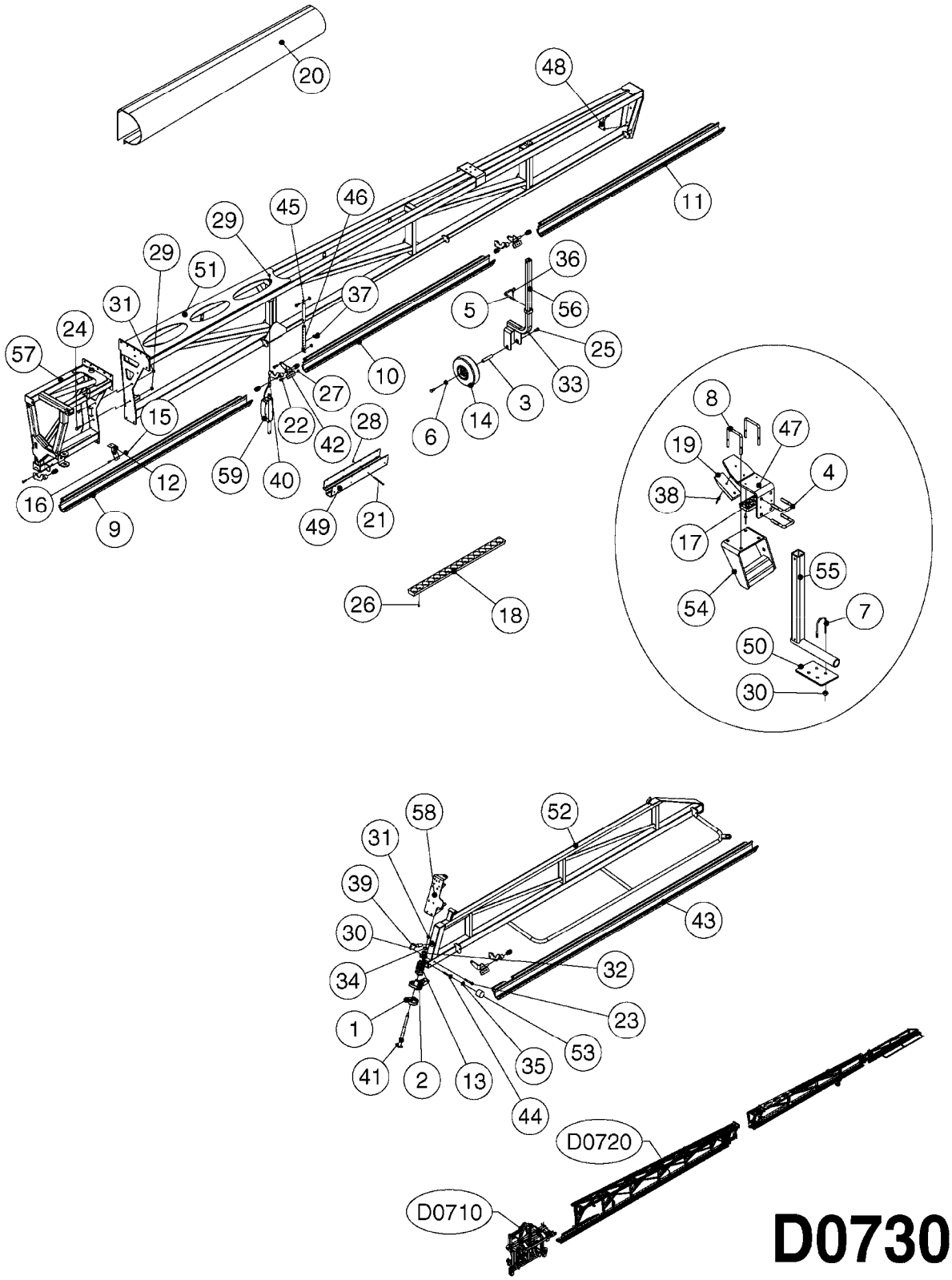

Agroparts: www.HARDI-INTERNATIONAL.com

BOOM TF OUTER HAZ 2-FOLD 118'
D0730-HIN, 11:12:17

Date 12.08.2020 11:38

Pos.	parts-nº	order qty	description
1	111344	1	CLAW CLUTCH Ø100/Ø20,5 UNDER PART RED
2	111640	1	CLAW CLUTCH Ø100 TOP PART RED
3	141562	1	FRONTWHEEL AXLE 3 WHEEL
4	143161	1	BOLT U M10 40X40
5	144642	1	LOCKING PAWL D10X65MM
6	145882	1	BUSHING D30/D21X7
7	146267	1	BOLT U F.500 EAG BRACE
8	146843	1	BOLT U M8 F.60 x 60
9	147486	1	AIR SLOT RAIL L=1995/D25
10	147488	1	AIR SLOT RAIL L=1935/D25
11	147490	1	AIR SLOT RAIL L=2435/D25
12	161128	1	NOZZLE HOLDER TF
13	220673	1	SPRING F.PIVOT 100 X 51
14	285500	1	WHEEL F.BOOM SUPPORT 85X20
15	322114	1	NUT PLASTIC F.NOZZ.H
16	322116	1	BOLT PLASTIC F.NOZZ.H.
17	334603	1	RUBBER STOP 86X48X15
18	334887	1	AIRGUIDE TWIN FORCE L=494
19	390826	1	SLIDE PAD F.TRANSPORT BKT.CM/D
20	391183	1	AIR BAG F.BREAKAWAY 3M HAZ-R.
20	391184	1	AIR BAG F.BREAKAWAY 3M HAZ-L.
21	410524	1	BOLT HEX 8.8 DEL M6X100
22	420567	1	BOLT HEX 8.8 DEL M8X30 FT
23	421222	1	BOLT HEX 8.8 DEL M10X75 FT
24	430286	1	BOLT HEX 8.8 DEL M12X30 FT
25	430522	1	BOLT HEX 8.8 DEL M12X25 FT
26	440673	1	SCREW F.PLASTIC 5X12 SS
27	460143	1	LOCK NUT M8 SST A2 DIN985
28	460261	1	NUT HEX M6X1.00 LOCK DIN985 A2 SS
29	460342	1	NUT HEX M10 DEL DIN934
30	460423	1	NUT HEX M10X1.50 LOCK DIN985A2 SS
31	460703	1	NUT HEX M12X1.75 LOCK DIN985A2 SS
32	461251	1	NUT HEX M20 X 2.5 JAMB
33	470385	1	WASHER D14.8D8.1X2 LOCK GALV.
34	471127	1	WASHER, M12, Ø24/13X24X2.5 SS
35	471180	1	LOCK WASHER NORDLOCK M20 ELZ
36	480244	1	PIN SNAP D4.5
37	480724	1	PIN SPLIT PIPE
38	480816	1	RIVET Ø4.8X19.0/Ø14
39	615800	1	LINK EYE BR.WING
40	615808	1	ANCHOR ADJ.F.ACTUATOR
41	615819	1	PIN
42	637855	1	BKT AIR SLOT LH
42	637856	1	BKT AIR SLOT RH
43	14049300	1	AIR PROFILE L=2755 W. D25 L.
43	14049500	1	AIR PROFILE L=2755 W. D25 R.
44	14074500	1	THREADED PIN NV32/M10 L= 89
45	14076500	1	PIN D19.0 L= 204 PAINTED
46	15110800	1	PIPE D26.9X2.9 PAINTED
47	16158200	1	TARNSPORT BRACKET HOOK HAZ
48	16191400	1	PLATE 4X200, D11
49	16195700	1	SUPPORT F.OUTER WING 118' HAZ
50	16205500	1	BRACKET 173326 PAINTED
51	28076300	1	ALUM.OUTER WING 118' HAZ RIGHT
51	28076400	1	ALUM.OUTER WING 118' HAZ LEFT
52	28076700	1	ALUM.BREAKAWAY 118' HAZ CLUTCH RIGHT
52	28076800	1	ALUM.BREAKAWAY 118' HAZ LEFT
53	28088100	1	RUBBER STOP E 50X40 M10
54	61039300	1	TRANSPORT SLIDE BRACKET HAZ LH
54	61039400	1	TRANSPORT SLIDE BRACKET HAZ RH
55	61043300	1	TRANS PORT TUBE UPRIGHT HAZ

Pos.	parts-n°	order qty	description
56	61045500	1	ARM F. SUPPORT WHEEL
57	63054300	1	OUT.WING/INNER PART 118' HAZ R
57	63054400	1	OUT.WING/INNER PART 118' HAZ L
58	63061600	1	BRACKET F.BREAKAWAY 118'HAZ R.
58	63061700	1	BRACKET F.BREAKAWAY 118'HAZ L.
59	72058900	1	ACTUATOR,0-130MM,0-12V, 4 WIRE

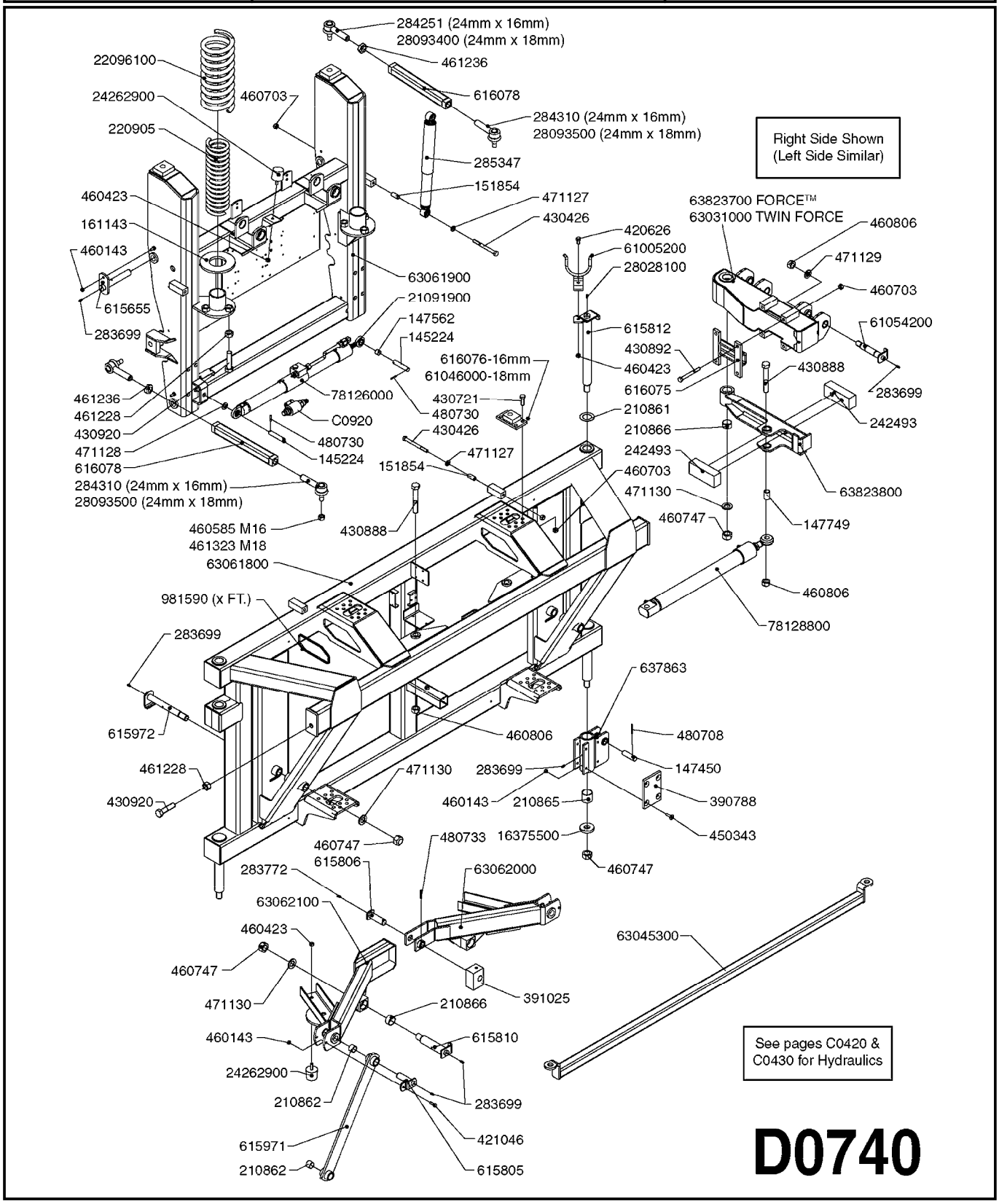
284251 (24mm x 16mm)
28093400 (24mm x 18mm)
461236
616078
284310 (24mm x 16mm)
28093500 (24mm x 18mm)
22096100
24262900
460703
220905
285347
151854
471127
430426
460423
161143
460143
615655
283699
63061900
21091900
147562
145224
616076-16mm
61046000-18mm
430721
480730
430426
471127
151854
78126000
C0920
480730
145224
461236
461228
430920
471128
616078
284310 (24mm x 16mm)
28093500 (24mm x 18mm)
460585 M16
461323 M18
430888
63061800
981590 (x FT.)
283699
615972
461228
430920
460806
471130
460747
615806
480733
283772
63062000
63062100
460423
460747
471130
210866
391025
460143
615810
24262900
210862
283699
421046
615971
210862
615805
Right Side Shown
(Left Side Similar)
63823700 FORCE™
63031000 TWIN FORCE
460806
471129
460703
61054200
420626
61005200
28028100
615812
430892
460423
616075
430888
283699
210861
210866
242493
242493
460703
471130
63823800
460747
147749
460806
78128800
637863
480708
147450
283699
460143
210865
390788
16375500
450343
460747
63045300
See pages C0420 &
C0430 for Hydraulics

D0740

Agroparts: www.HARDI-INTERNATIONAL.com

WIDE CENTER FRAME-FORCE/TF
D0740-HIN, 05:06:19

Date 12.08.2020 11:38

parts-n°	order qty	description
145224	1	SHAFT FOR HY CYLINDER
147450	1	PIN D20 X 70
147562	1	BUSHING D19.8/17.0 L=15
147749	1	BUSHING D25.0/20.2 L=38
151854	1	BUSHING F.SHOCK
161143	1	PLATE F SPRING
210861	1	BUSHING
210862	1	BUSHING 28X25X20
210865	1	BUSHING 40mm40mm DU
210866	1	BUSHING D39/35 L=20
220905	1	SPRING D101/14 BLACK
242493	1	RUBBER BUMPER 60X40X150
283699	1	GREASE NIPPLE M6X1
283772	1	GREASE NIPPLE M6X1 90°
284251	1	ROD END 25Ø (24mm x 16mm) RH
284310	1	ROD END 25Ø (24mm x 16mm) LH
285347	1	SHOCK TF
390788	1	TEFLON WARE PAD
391025	1	JOINER BLOCK - FORCE
420626	1	BOLT HEX 8.8 DEL M10X20 FT
421046	1	BOLT HEX M8X25/25 A2 SS DIN933
430426	1	BOLT HEX 8.8 DEL M12X130
430721	1	BOLT HEX 8.8 DEL M12X40 FT
430888	1	BOLT HEX 8.8 DEL M20X130
430892	1	BOLT HEX 8.8 DEL M12X110
430920	1	BOLT HEX M20x80MM
450343	1	SCREW M8X30 ALLEN HEAD C/S SS
460143	1	LOCK NUT M8 SST A2 DIN985
460423	1	NUT HEX M10X1.50 LOCK DIN985A2 SS
460585	1	LOCKING NUT M16 DIN985 A2 SS
460703	1	NUT HEX M12X1.75 LOCK DIN985A2 SS
460747	1	NUT HEX M24 LOCK
460806	1	NUT HEX M20X2.50 LOCK DIN985A2 SS
461228	1	NUT HEX M20
461236	1	NUT HEX M24X1.5
461323	1	NUT HEX M18X1.5 LOCK
471127	1	WASHER, M12, Ø24/13X24X2.5 SS
471128	1	WASHER, M16, Ø30/17.0X 3.0, SS
471129	1	WASHER, M20, Ø37/21.0X 3.0, SS
471130	1	WASHER, M24, Ø44/25.0X 4.0, SS
480708	1	PIN D4 X 45
480730	1	SPRING DOWEL PIN 5X30 SST
480733	1	PIN D6 X 40
615655	1	PIN D25 X 156 F. PARALIFT
615805	1	PIN
615806	1	PIN
615810	1	PIN
615812	1	PIN
615971	1	TRAPEZE ARM FORCE 110'
615972	1	PIN D25X185 M24
616075	1	FLANGE F. FORCE HINGE
616076	1	LINK ARM MOUNT BRACKET
616078	1	LINK ARM
637863	1	HINGE F.TF LOWER
981590	1	EDGE GUARD 6-8MM X 12"
16375500	1	WASHER 10.0X60X25 RED
21091900	1	LINK HEAD M16 x D17 DELTA
22096100	1	SPRING D146/20 BLACK
24262900	1	RUBBER STOP D50X40 M10X33
28028100	1	GREASE NIPPLE 1/8'RG 90°
28093400	1	ROD END 35Ø (24mm x 18mm) RH

parts-n°	order qty	description
28093500	1	ROD END 35Ø (24mm x 18mm) LH
61005200	1	HOSE HOLDER
61046000	1	LINK ARM MNT BKT. FTZ "06"
61054200	1	PIN D25X162 M20 W/LUBE HOLE 09
63031000	1	HINGE F.TWIN FORCE
63045300	1	PIVOT SUPRT BAR FORCE CEN.
63061800	1	CENTER SECTION FORCE
63061900	1	LIFT FRAME CM - FORCE
63062000	1	SUSPENSION ARM RH
63062100	1	SUSPENSION ARM LH
63823700	1	HINGE F.FORCE
63823800	1	INNER HINGE F.FORCE
78126000	1	CYLINDER,DAMPNER,LOCKING
78128800	1	CYLINDER, D50/30-500

BOOM-FORCE INNER WING 80'-132'
D0750-HIN, 01:01:16

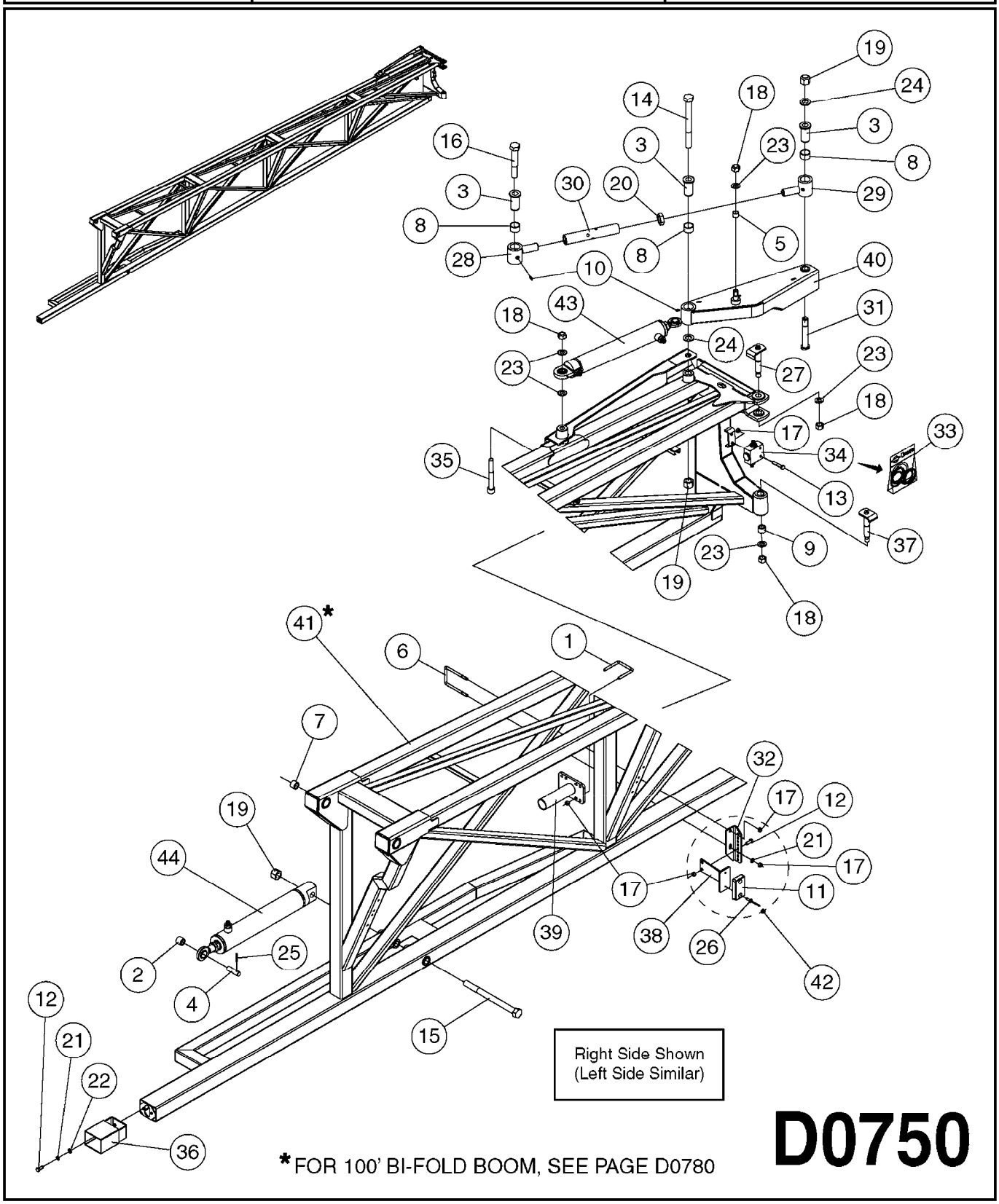

Right Side Shown
(Left Side Similar)

*FOR 100' BI-FOLD BOOM, SEE PAGE D0780

D0750

BOOM-FORCE INNER WING 80'-132'
D0750-HIN, 01:01:16

Date 12.08.2020 11:38

Pos.	parts-nº	order qty	description
1	146843	1	BOLT U M8 F.60 x 60
2	147130	1	BUSHING D25/20 20MM
3	147390	1	BUSHING
4	147450	1	PIN D20 X 70
5	147562	1	BUSHING D19.8/17.0 L=15
6	147770	1	U-BOLT M8-105X63
7	210835	1	BUSHING D28/25 L=25
8	210858	1	BUSHING 034/30 L=20
9	210859	1	BUSH Ø23X20 L20
10	283699	1	GREASE NIPPLE M6X1
11	334603	1	RUBBER STOP 86X48X15
12	420582	1	BOLT HEX 8.8 DEL M8X20 FT A2
13	420781	1	BOLT HEX 8.8 DEL M8X50
14	430940	1	BOLT M20X210 8.8 DEL.
15	430941	1	BOLT M20X260 8.8 DEL.
16	430970	1	BOLT HEX M20X120 DIN931- DEL
17	460143	1	LOCK NUT M8 SST A2 DIN985
18	460585	1	LOCKING NUT M16 DIN985 A2 SS
19	460806	1	NUT HEX M20X2.50 LOCK DIN985A2 SS
20	461236	1	NUT HEX M24X1.5
21	470072	1	WASHER D15/D8X.5 LOCK
22	471126	1	WASHER, M8, Ø16/ 8.4X 1.6, SS
23	471128	1	WASHER, M16, Ø30/17.0X 3.0, SS
24	471129	1	WASHER, M20, Ø37/21.0X 3.0, SS
25	480708	1	PIN D4 X 45
26	480808	1	RIVET Ø4.8x25.5/Ø9.5
27	615820	1	PIN D20 X M16 L=127MM
28	61009200	1	EYEBOLT LH TRD./ LH WING M24
			EYEBOLT WITH L.H. THREADS FOR LEFT WING
28	616084	1	EYEBOLT LH TRD./ RH WING M24
			EYEBOLT WITH R.H. THREADS FOR RIGHT WING
29	61009300	1	EYEBOLT STD.TRD. / RH WING M24
			EYEBOLT WITH STD. THREADS FOR RIGHT WING
29	616085	1	EYEBOLT STD. TRD./ LH WING M24
			EYEBOLT WITH STD. THREADS FOR LEFT WING
30	14008800	1	TURNBUCKLE L=200/M24X1.5
31	14011900	1	PIN M20 L=125/D30
32	16063803	1	BOOM STOP ADJ. MT. BKT.FTZ
33	28001800	1	REPAIR KIT F.ENDSTOP 1/4"
34	28028600	1	END STOP 1/4"
35	45003000	1	BOLT HEX M16X120 DIN912/DELTA
36	61005300	1	EXTENSION F.FTZ - OFF CENTER
36	61005400	1	EXTENSION F.FTZ - ON CENTER
37	61006800	1	PIN D20 X M16 L=127MM
38	61006903	1	BOOM STOP ADJ. L=111 FTZ
39	61015600	1	BOOM STOP TRANS REST,I.FTZ
40	63118500	1	FOLDING ARM 1. FTZ / HAZ. R. RED
			FOLD ARM FOR RIGHT WING
40	63118800	1	FOLDING ARM 1. FTZ / HAZ. L RED
			FOLD ARM FOR LEFT WING
41	70081103	1	WING INNER 90/120/132' RH I.F.
			R.H. WING FOR 90', 120' & 132' BOOMS
41	70081203	1	WING INNER 90/120/132' LH I.F.
			L.H. WING FOR 90', 120' & 132' BOOMS
41	70081603	1	WING INNER 80'/100'T RH I.F.
			R.H. WING FOR 80' & 100' TRI-FOLD BOOMS
41	70081703	1	WING INNER 80'/100'T LH I.F.
			L.H. WING FOR 80' & 100' TRI-FOLD BOOMS
42	72252900	1	BOOM STOP ADJSTBL. FORCE L=148
			COMPLETE ASSEMBLY (WITH U-BOLT)

Pos.	parts-nº	order qty	description
43	78122100	1	CYLINDER DOUBLE D50/25-298 CYLINDER FOR 120' & 132' BOOMS
43	78122400	1	DOUBLE CYLINDER D 40/20-300 CYLINDER FOR 80'-100' BOOMS
44	78128800	1	CYLINDER, D50/30-500

	Agroparts: www.HARDI-INTERNATIONAL.com	
HARDI	BOOM-FORCE OUTER WING 110-132' D0760-HIN, 01:01:16	Page 0 Date 12.08.2020 11:38

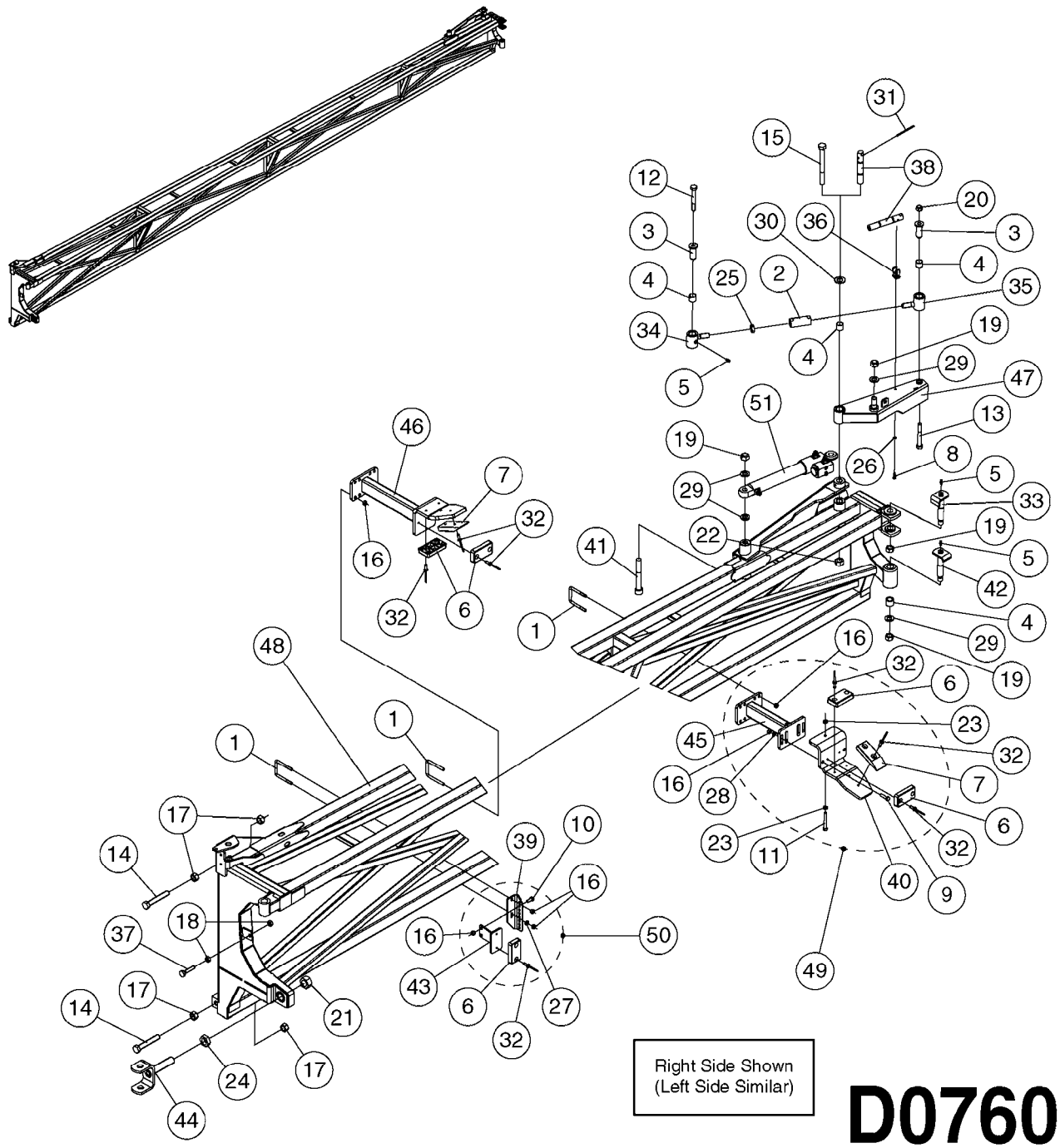

BOOM-FORCE OUTER WING 110-132'
D0760-HIN, 01:01:16

Date 12.08.2020 11:38

Pos.	parts-nº	order qty	description
1	147516	1	U-BOLT M8-50x50
2	147649	1	TURNBUCKLE D30.0 L=64/M16X1.5
3	147763	1	BUSHING D20.0/12.0 L=55
4	210859	1	BUSH Ø23X20 L20
5	283699	1	GREASE NIPPLE M6X1
6	334603	1	RUBBER STOP 86X48X15
7	390826	1	SLIDE PAD F.TRANSPORT BKT.CM/D
8	410185	1	BOLT HEX 8.8 DEL M6X16
9	420567	1	BOLT HEX 8.8 DEL M8X30 FT
10	420582	1	BOLT HEX 8.8 DEL M8X20 FT A2
11	421254	1	BOLT HEX 8.8 SS M8X50
12	430485	1	BOLT HEX 8.8 DEL M12X90
13	430787	1	BOLT HEX M12X90 A4-80
14	430861	1	BOLT HEX 8.8 DEL M16X100 FT
15	430940	1	BOLT M20X210 8.8 DEL.
16	460143	1	LOCK NUT M8 SST A2 DIN985
17	460327	1	NUT HEX M16X2
18	460342	1	NUT HEX M10 DEL DIN934
19	460585	1	LOCKING NUT M16 DIN985 A2 SS
20	460703	1	NUT HEX M12X1.75 LOCK DIN985A2 SS
21	460747	1	NUT HEX M24 LOCK
22	460806	1	NUT HEX M20X2.50 LOCK DIN985A2 SS
23	460817	1	NUT HEX M8 STAINLESS DIN 934
24	461244	1	NUT HEX M24X3 JAMB.
25	461302	1	NUT HEX M16X1.5 JAMB.
26	470061	1	WASHER D11/D7X0.5 LOCK
27	470072	1	WASHER D15/D8X.5 LOCK
28	471126	1	WASHER, M8, Ø16/ 8.4X 1.6, SS
29	471128	1	WASHER, M16, Ø30/17.0X 3.0, SS
30	471129	1	WASHER, M20, Ø37/21.0X 3.0, SS
31	480780	1	PIN M5.0X70 SPLIT
32	480808	1	RIVET Ø4.8x25.5/Ø9.5
33	615796	1	PIN D20 X M16 L=119MM
34	61006600	1	EYEBOLT STD.TRD. / RH WING M16
			EYEBOLT WITH STD. THREADS FOR RIGHT WING
34	616081	1	EYEBOLT STD.TRD. / LH WING M16
			EYEBOLT WITH STD. THREADS FOR LEFT WING
35	61006700	1	EYEBOLT LH TRD. / RH WING M16
			EYEBOLT WITH L.H. THREADS FOR RIGHT WING
35	616083	1	EYEBOLT LH TRD. / LH WING M16
			EYEBOLT WITH L.H. THREADS FOR LEFT WING
36	725618	1	CLIP WHITE PLASTIC SNAP TYPE
37	14011800	1	BOLT HEX DEL M10X60 SPECIAL
38	14012300	1	SHEAR PIN D19.8 L=132/D5
39	16063803	1	BOOM STOP ADJ. MT. BKT.FTZ
40	16099000	1	BOOM STOP ADJ. PLATE FTZ
41	45003000	1	BOLT HEX M16X120 DIN912/DELTA
42	61006800	1	PIN D20 X M16 L=127MM
43	61007003	1	BOOM STOP HPZ/FTZ L=95/75
44	61008700	1	LINK EYE FORCE
45	61015400	1	BOOM STOP ADJ. MT BKT FTZ
46	61015900	1	BOOMSTOP/SUP HPZ/FTZ L=288
47	63002200	1	FOLD ARM FTZ 2.RH
			FOLD ARM FOR RIGHT WING
47	63002300	1	FOLD ARM FTZ 2.LH
			FOLD ARM FOR LEFT WING
48	70081803	1	WING INTER. FORCE 120/132' RH
48	70081903	1	WING INTER. FORCE 120/132' LH
48	70082003	1	WING INTER. FORCE 100'T RH
48	70082103	1	WING INTER. FORCE 100'T LH
49	72252600	1	BOOM STOP ADJSTBL. FORCE L=241

Pos.	parts-nº	order qty	description
50	72252800	1	BOOM STOP ADJSTBL. FORCE L=108
51	78126400	1	CYLINDER DBLE D32/16-200 W.STP

BOOM-FORCE BREAKAWAY 80'-132'
D0770-HIN, 01:01:16

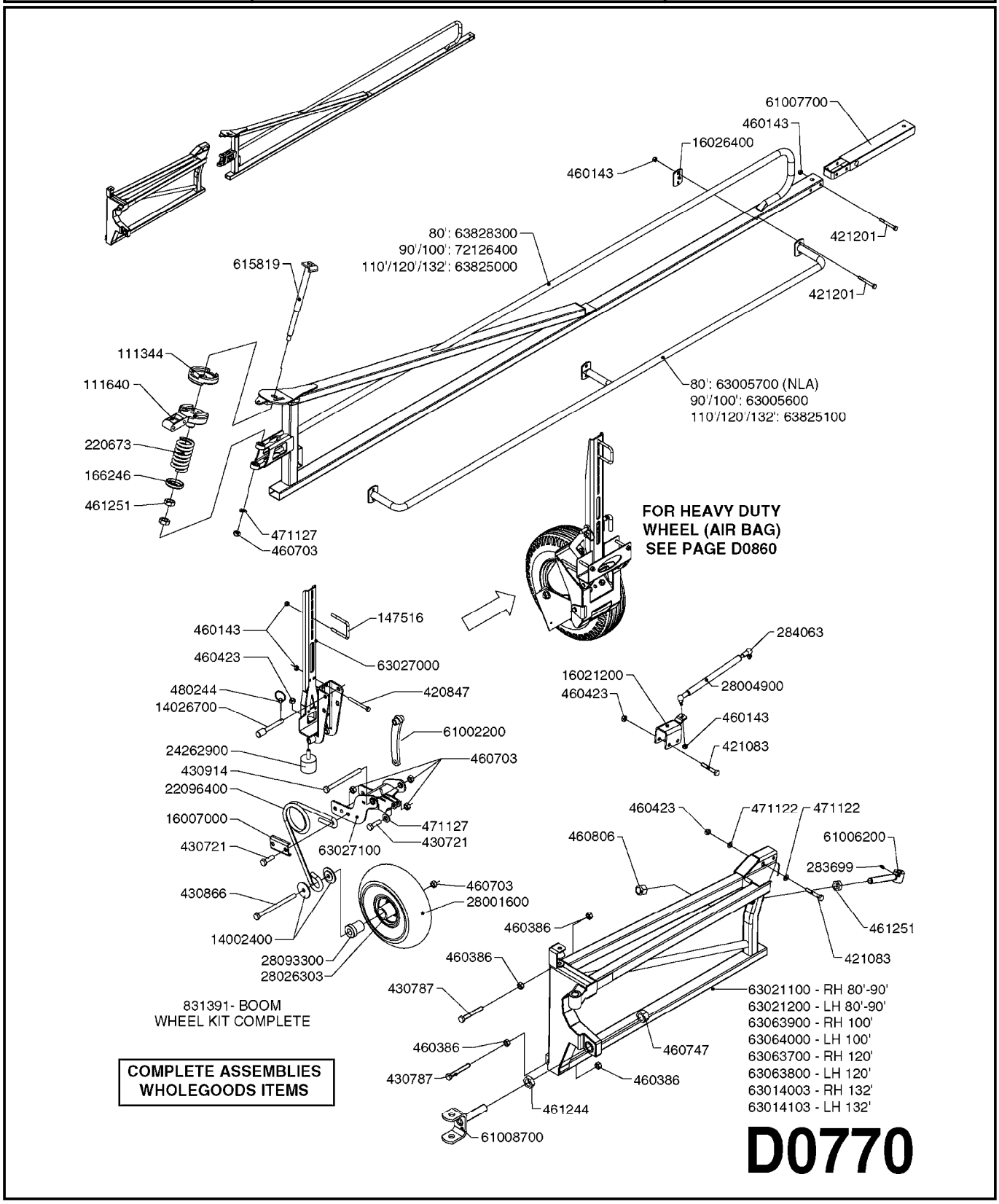

Agroparts: www.HARDI-INTERNATIONAL.com

BOOM-FORCE BREAKAWAY 80'-132'
D0770-HIN, 01:01:16

Date 12.08.2020 11:38

parts-n°	order qty	description
111344	1	CLAW CLUTCH Ø100/Ø20,5 UNDER PART RED
111640	1	CLAW CLUTCH Ø100 TOP PART RED
147516	1	U-BOLT M8-50x50
166246	1	WASHER CUP D53 F.SPRING
220673	1	SPRING F.PIVOT 100 X 51
283699	1	GREASE NIPPLE M6X1
284063	1	BALL JOINT M6 90 DEGREE
420847	1	BOLT HEX 8.8 DEL M8X85
421083	1	BOLT HEX 8.8 DEL M10X65
421201	1	BOLT HEX 8.8 DEL M8X70
430721	1	BOLT HEX 8.8 DEL M12X40 FT
430787	1	BOLT HEX M12X90 A4-80
430866	1	BOLT HEX 8.8 DEL M12X170
430914	1	BOLT HEX 8.8 DEL M12X150
460143	1	LOCK NUT M8 SST A2 DIN985
460386	1	NUT HEX M12X1.75
460423	1	NUT HEX M10X1.50 LOCK DIN985A2 SS
460703	1	NUT HEX M12X1.75 LOCK DIN985A2 SS
460747	1	NUT HEX M24 LOCK
460806	1	NUT HEX M20X2.50 LOCK DIN985A2 SS
461244	1	NUT HEX M24X3 JAMB.
461251	1	NUT HEX M20 X 2.5 JAMB
471122	1	WASHER, M10, Ø20/10.5X 2.0, SS
471127	1	WASHER, M12, Ø24/13X24X2.5 SS
480244	1	PIN SNAP D4.5
615819	1	PIN
831391	1	BOOM WHEEL KIT (2) F. FORCE 2002
14002400	1	BUSHING D55.0/12.5 L=6 D34
14026700	1	PIN Ø12 L=115/Ø5
16007000	1	SPRING HOLDER L=80
16021200	1	ANCHOR FORK F.40X40 TUBE
16026400	1	FLAT BAR 40X4 F.BRACE
22096400	1	SPRING FOR TOUCHDOWN WHEEL RED
24262900	1	RUBBER STOP D50X40 M10X33
28001600	1	WHEEL 12-1/2" 4 PLY
28004900	1	GAS SPRING F.BREAKAWAY FORCE
28026303	1	BEARING SEALED OD47xID20
28093300	1	BUSH F. TIRE ASSM 28001600
61002200	1	ADJ.ARM FTZ BOOMWHEEL
61006200	1	ADJ. ARM F.BREAKAWAY FTZ
61007700	1	EXTENSION F.BREAKAWAY FORCE
61008700	1	LINK EYE FORCE
63005600	1	BRACE F.BREAKAWAY 90'/100'
63005700	1	BRACE F.BREAKAWAY 80'
63014003	1	BOOM WING 132' OUTER SEC. R.H.
63014103	1	BOOM WING 132' OUTER SEC. L.H.
63021100	1	WING OUT. FTZ 80-90' RH'10
63021200	1	WING OUT. FTZ 80-90' LH'10
63027000	1	FTZ BOOMWHEEL / TOP
63027100	1	SPRING BRACKET FOR BOOM WHEEL
63063700	1	WING OUTER 2 FORCE 120' RH
63063800	1	WING OUTER 2 FORCE 120' LH
63063900	1	WING OUTER FORCE 100'-120' RH
63064000	1	WING OUTER FORCE 100'-120' LH
63825000	1	BREAKAWAY FTZ/SPC 3.0M, RED
63825100	1	BRACE F.BREAKAWAY 110/120'
63828300	1	BREAKAWAY FTZ/SPC 2.0M, RED
72126400	1	WING BREAKAWAY 80'-90' SPC

	Agroparts: www.HARDI-INTERNATIONAL.com	
HARDI	BOOM-FORCE INNER 100' BI-FOLD D0780-HIN, 01:01:16	Page 0 Date 12.08.2020 11:38

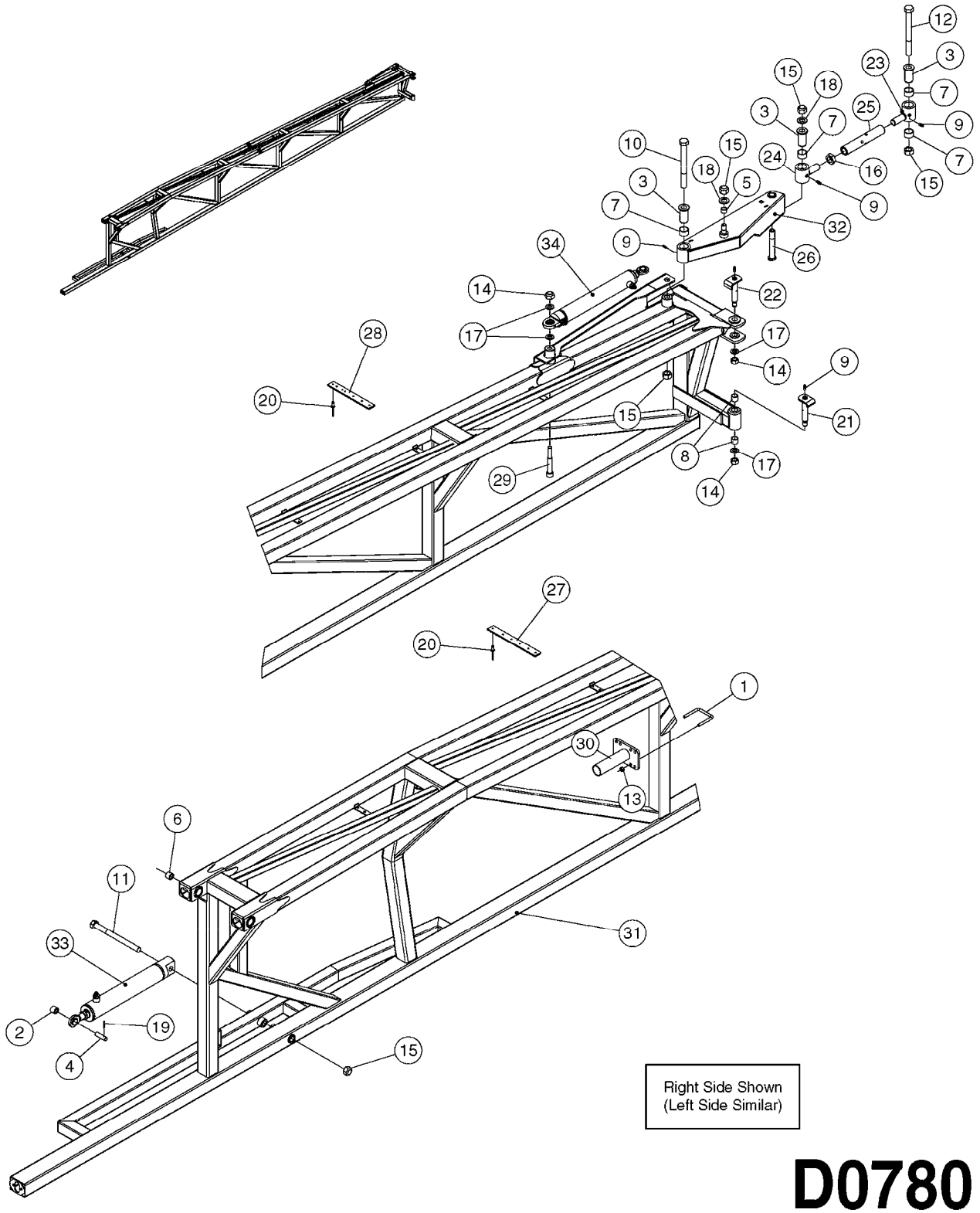

D0780

BOOM-FORCE INNER 100' BI-FOLD
D0780-HIN, 01:01:16

Date 12.08.2020 11:38

Pos.	parts-nº	order qty	description
1	146843	1	BOLT U M8 F.60 x 60
2	147130	1	BUSHING D25/20 20MM
3	147390	1	BUSHING
4	147450	1	PIN D20 X 70
5	147562	1	BUSHING D19.8/17.0 L=15
6	210835	1	BUSHING D28/25 L=25
7	210858	1	BUSHING 034/30 L=20
8	210859	1	BUSH Ø23X20 L20
9	283699	1	GREASE NIPPLE M6X1
10	430940	1	BOLT M20X210 8.8 DEL.
11	430941	1	BOLT M20X260 8.8 DEL.
12	430970	1	BOLT HEX M20X120 DIN931- DEL
13	460143	1	LOCK NUT M8 SST A2 DIN985
14	460585	1	LOCKING NUT M16 DIN985 A2 SS
15	460806	1	NUT HEX M20X2.50 LOCK DIN985A2 SS
16	461236	1	NUT HEX M24X1.5
17	471128	1	WASHER, M16, Ø30/17.0X 3.0, SS
18	471129	1	WASHER, M20, Ø37/21.0X 3.0, SS
19	480708	1	PIN D4 X 45
20	480804	1	RIVET Ø4.8x14.5
21	615796	1	PIN D20 X M16 L=119MM
22	615820	1	PIN D20 X M16 L=127MM
23	616084	1	EYEBOLT LH TRD./ RH WING M24
			EYEBOLT WITH L.H. THREADS FOR RIGHT WING
23	61009200	1	EYEBOLT LH TRD./ LH WING M24
			EYEBOLT WITH L.H. THREADS FOR LEFT WING
24	616085	1	EYEBOLT STD. TRD./ LH WING M24
			EYEBOLT WITH STD. THREADS FOR LEFT WING
24	61009300	1	EYEBOLT STD.TRD. / RH WING M24
			EYEBOLT WITH STD. THREADS FOR RIGHT WING
25	14008800	1	TURNBUCKLE L=200/M24X1.5
26	14011900	1	PIN M20 L=125/D30
27	17015703	1	FLAT BAR 3/16"X1.25" L=255
			MOUNT BRACKET F.T25 PLUMBING
28	17015903	1	FLAT BAR 3/16"X1.25" L=220
			MOUNT BRACKET F.T25 PLUMBING
29	45003000	1	BOLT HEX M16X120 DIN912/DELTA
30	61015600	1	BOOM STOP TRANS REST,I.FTZ
31	63044400	1	WING INNER 100' FTZ R.H.
31	63044500	1	WING INNER 100' FTZ L.H.
32	63118500	1	FOLDING ARM 1. FTZ / HAZ. R. RED
32	63118800	1	FOLDING ARM 1. FTZ / HAZ. L RED
33	78121400	1	DOUBLE CYLINDER D 50/30-300
34	78122400	1	DOUBLE CYLINDER D 40/20-300

	Agroparts: www.HARDI-INTERNATIONAL.com	
HARDI	BOOM-FORCE OUTER 100' BI-FOLD D0790-HIN, 01:01:16	Page 0 Date 12.08.2020 11:38

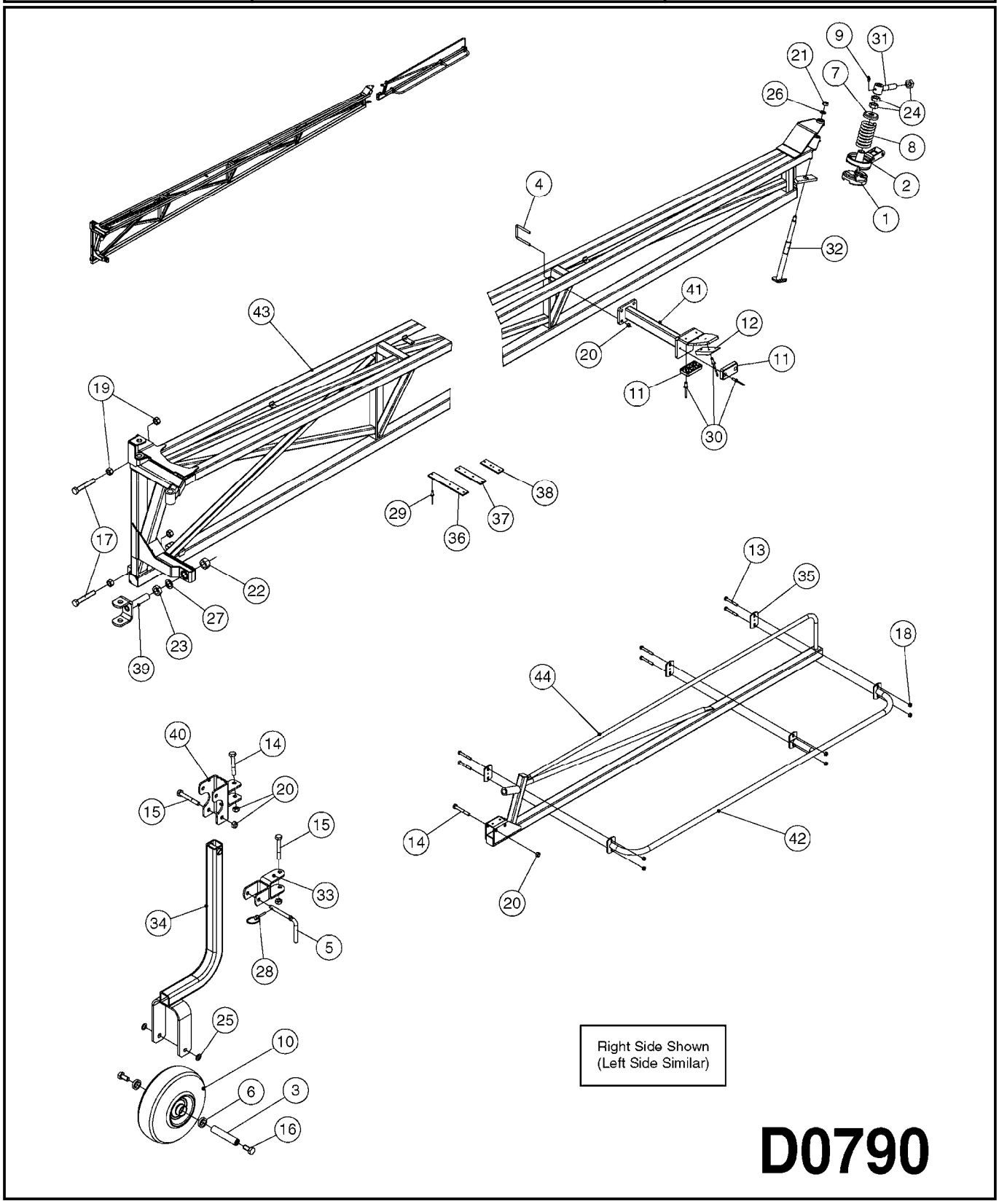

D0790

Agroparts: www.HARDI-INTERNATIONAL.com

BOOM-FORCE OUTER 100' BI-FOLD
D0790-HIN, 01:01:16

Date 12.08.2020 11:38

Pos.	parts-n°	order qty	description
1	111344	1	CLAW CLUTCH Ø100/Ø20,5 UNDER PART RED
2	111640	1	CLAW CLUTCH Ø100 TOP PART RED
3	141562	1	FRONTWHEEL AXLE 3 WHEEL
4	143161	1	BOLT U M10 40X40
5	144642	1	LOCKING PAWL D10X65MM
6	145882	1	BUSHING D30/D21X7
7	166246	1	WASHER CUP D53 F.SPRING
8	220673	1	SPRING F.PIVOT 100 X 51
9	283699	1	GREASE NIPPLE M6X1
10	285500	1	WHEEL F.BOOM SUPPORT 85X20
11	334603	1	RUBBER STOP 86X48X15
12	390826	1	SLIDE PAD F.TRANSPORT BKT.CM/D
13	421024	1	BOLT HEX 8.8 DEL M8X60
14	421083	1	BOLT HEX 8.8 DEL M10X65
15	421222	1	BOLT HEX 8.8 DEL M10X75 FT
16	430522	1	BOLT HEX 8.8 DEL M12X25 FT
17	430861	1	BOLT HEX 8.8 DEL M16X100 FT
18	460143	1	LOCK NUT M8 SST A2 DIN985
19	460327	1	NUT HEX M16X2
20	460423	1	NUT HEX M10X1.50 LOCK DIN985A2 SS
21	460703	1	NUT HEX M12X1.75 LOCK DIN985A2 SS
22	460747	1	NUT HEX M24 LOCK
23	461244	1	NUT HEX M24X3 JAMB.
24	461251	1	NUT HEX M20 X 2.5 JAMB
25	470385	1	WASHER D14.8D8.1X2 LOCK GALV.
26	471127	1	WASHER, M12, Ø24/13X24X2.5 SS
27	471179	1	LOCK WASHER NORDLOCK M24 ELZ
28	480244	1	PIN SNAP D4.5
29	480804	1	RIVET Ø4.8x14.5
30	480816	1	RIVET Ø4.8X19.0/Ø14
31	615800	1	LINK EYE BR.WING
32	615819	1	PIN
33	615873	1	MOUNT BRKT -BOOM WHEEL HAZ
34	615874	1	ARM F.BOOM WHEEL HAZ
35	16026400	1	FLAT BAR 40X4 F.BRACE
36	17016103	1	FLAT BAR 3/16"X1.25" L=195
			MOUNT BRACKET F.T25 PLUMBING
37	17016303	1	FLAT BAR 3/16"X1.25" L=145
			MOUNT BRACKET F.T25 PLUMBING
38	17016503	1	FLAT BAR 3/16"X1.25" L=100
			MOUNT BRACKET F.T25 PLUMBING
39	61008700	1	LINK EYE FORCE
40	61012700	1	BRKT-BOOMWHL HAZ88-100,3°R
			BRACKET FOR RIGHT WING
40	61012800	1	BRKT-BOOMWHL HAZ88-100,3°L
			BRACKET FOR LEFT WING
41	61016000	1	BOOMSTOP/SUP HPZ/FTZ L=338
42	63005700	1	BRACE F.BREAKAWAY 80'
43	63044600	1	WING OUTER 100' FTZ R.H.
43	63044700	1	WING OUTER 100' FTZ L.H.
44	63805000	1	BREAKAWAY 110' FORCE

	Agroparts: www.HARDI-INTERNATIONAL.com	
HARDI	BOOM TERRA FORCE INNER D0800-HIN, 17:07:19	Page 0 Date 12.08.2020 11:38

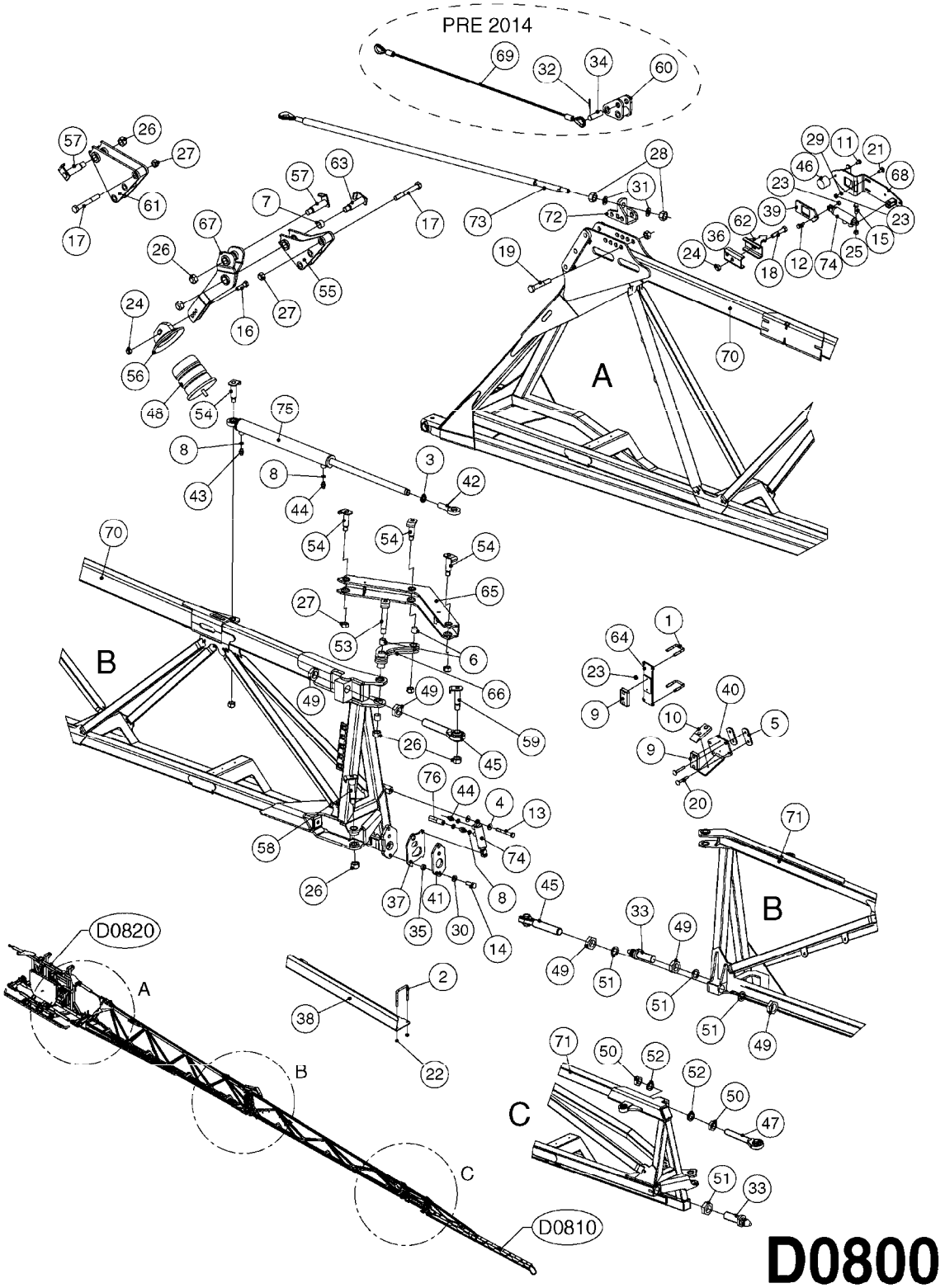

Agroparts: www.HARDI-INTERNATIONAL.com

BOOM TERRA FORCE INNER
D0800-HIN, 17:07:19

Date 12.08.2020 11:38

Pos.	parts-n°	order qty	description
1	143161	1	BOLT U M10 40X40
2	146843	1	BOLT U M8 F.60 x 60
3	147128	1	NUT M24X2 NV-32
4	165557	1	WASHER D28.0/D12.2X2.0 SS
5	171558	1	PLATE 6X92X40
6	210835	1	BUSHING D28/25 L=25
7	210858	1	BUSHING 034/30 L=20
8	241404	1	DOWTY SEAL 1/4"
9	334603	1	RUBBER STOP 86X48X15
10	390826	1	SLIDE PAD F.TRANSPORT BKT.CM/D
11	420862	1	BOLT HEX 8.8 DEL M10X16 FT
12	421002	1	BOLT HEX 8.8 DEL M10X30 FT DIN933
13	430367	1	BOLT HEX 8.8 DEL M12X100 DIN931
14	430581	1	BOLT HEX 8.8 DEL M16X40 FT
15	430721	1	BOLT HEX 8.8 DEL M12X40 FT
16	430765	1	BOLT HEX 8.8 DEL M16X55
17	430902	1	BOLT HEX 8.8 M20X150
18	430934	1	BOLT HEX 8.8 DEL M16X80
19	430970	1	BOLT HEX M20X120 DIN931- DEL
20	440718	1	BOLT CRG M10 X 65 DEL
21	440737	1	BOLT CARRIAGE M10x25 SS
22	460143	1	LOCK NUT M8 SST A2 DIN985
23	460423	1	NUT HEX M10X1.50 LOCK DIN985A2 SS
24	460585	1	LOCKING NUT M16 DIN985 A2 SS
25	460703	1	NUT HEX M12X1.75 LOCK DIN985A2 SS
26	460747	1	NUT HEX M24 LOCK
27	460806	1	NUT HEX M20X2.50 LOCK DIN985A2 SS
28	461242	1	NUT HEX M24X3
29	471122	1	WASHER, M10, Ø20/10.5X 2.0, SS
30	471168	1	PAIR OF WASHERS NL16 17X25,4x3,4
31	471179	1	LOCK WASHER NORDLOCK M24 ELZ
32	480708	1	PIN D4 X 45
33	14089000	1	PIN D36.0 L= 167
34	14098300	1	PIN D24.0 L=83/2XD4
35	15140000	1	BUSHING D25.5/16.5 L= 9 DEL
36	16270800	1	U-CHANNEL 63X27X6/L= 200, RED
37	16296100	1	PLATE 8.0X140X146 DEL
38	16318100	1	TRANSPORT PLATE, SS, TDZ
39	16330400	1	PLATE 8.0X74X145
40	16332700	1	TRANSPORT BRKT OUTER TDZ RIGHT
41	16332900	1	PLATE 10.0X80X174, RED
42	21091800	1	LINK HEAD Ø25,M24X55 W/ GREASE NIP. DELTA
43	23234100	1	HEX NIPPLE 1/4"-9/16" - 1.2mm
44	23234500	1	HEX NIPPLE 1/4" - 9/16"
45	28036600	1	EYEBOLT W/SWIVEL Ø25 M36X3 RH
46	28088100	1	RUBBER STOP E 50X40 M10
47	28096700	1	EYEBOLT W/SWIVEL Ø19.3 M27 RH
48	28103800	1	BUMPER PUR Ø160X161-M16 BLACK
49	46132800	1	NUT, JAMB M36X3 DIN439 DEL
50	46133100	1	JAM NUT M27 DIN 439 B DEL
51	47118300	1	NORDLOCK WASHER M36 LIM ZNK
52	47118500	1	NORDLOCK WASHER M27 LIM ZNK
53	61056000	1	PIN D25 L=134/M24
54	61056100	1	PIN D24.9 L=73/M20
55	61056800	1	TILT CYL.CONSOLE SUPP. TDZ
56	61057200	1	BUFFER GUIDE
57	61057300	1	PIN D29.8 L=92/M24
58	61057400	1	PIN D25.2 L=102/M24
59	61057500	1	PIN D25.2 L=77/M24 DEL
60	61066800	1	TILT CYL.CONSOLE STD. TDZ
61	61067000	1	TILT CYL.CONSOLE NORAC TDZ

Pos.	parts-nº	order qty	description
62	61068200	1	HOOK F.TRANSPORT LOCK, RED
63	61069100	1	PIN D29.8 L=90/M24 DEL
64	61071800	1	TRANSPORT BRACKET TDZ
65	63095000	1	FOLDARM, 1.OUTER, TDZ, PAINTED
66	63095400	1	BANANA ARM,1.OUTER,TDZ,RED, RH
67	63099000	1	TILT SUSPENSION ARM TDZ
68	63107600	1	TRANSPORT BRACKET TDZ
69	63108100	1	CABLE D12 L=1380
70	63109700	1	INNER, 7M TDZ RH, RED
			88' - 132' BOOMS
70	63109800	1	INNER, 7M TDZ LH, RED
			88' - 132' BOOMS
71	63110300	1	1.OUTER, 6M TDZ RH, RED
			120' & 132' BOOMS
71	63110400	1	1.OUTER, 6M TDZ LH, RED
			120' & 132' BOOMS
71	63155200	1	OUTER WING 2F, TDZ RH, RED
			88' - 100' BOOMS
71	63155300	1	OUTER WING 2F, TDZ LH, RED
			88' - 100' BOOMS
72	63162500	1	TILT WIRE BRKT 2013, TDZ, R, RED
72	63162700	1	TILT WIRE BRKT 2013, TDZ, L, RED
73	63199800	1	Ø12 WIRE L= 1610/M24
74	78127800	1	HYDRAULIC CYLINDER 25-40
75	78128700	1	CYLINDER DOUBLE D50/30 500
76	78216200	1	SEQUENCE VALVE 80 BAR

BOOM TERRA FORCE OUTER
D0810-HIN, 12:09:17

Date 12.08.2020 11:38

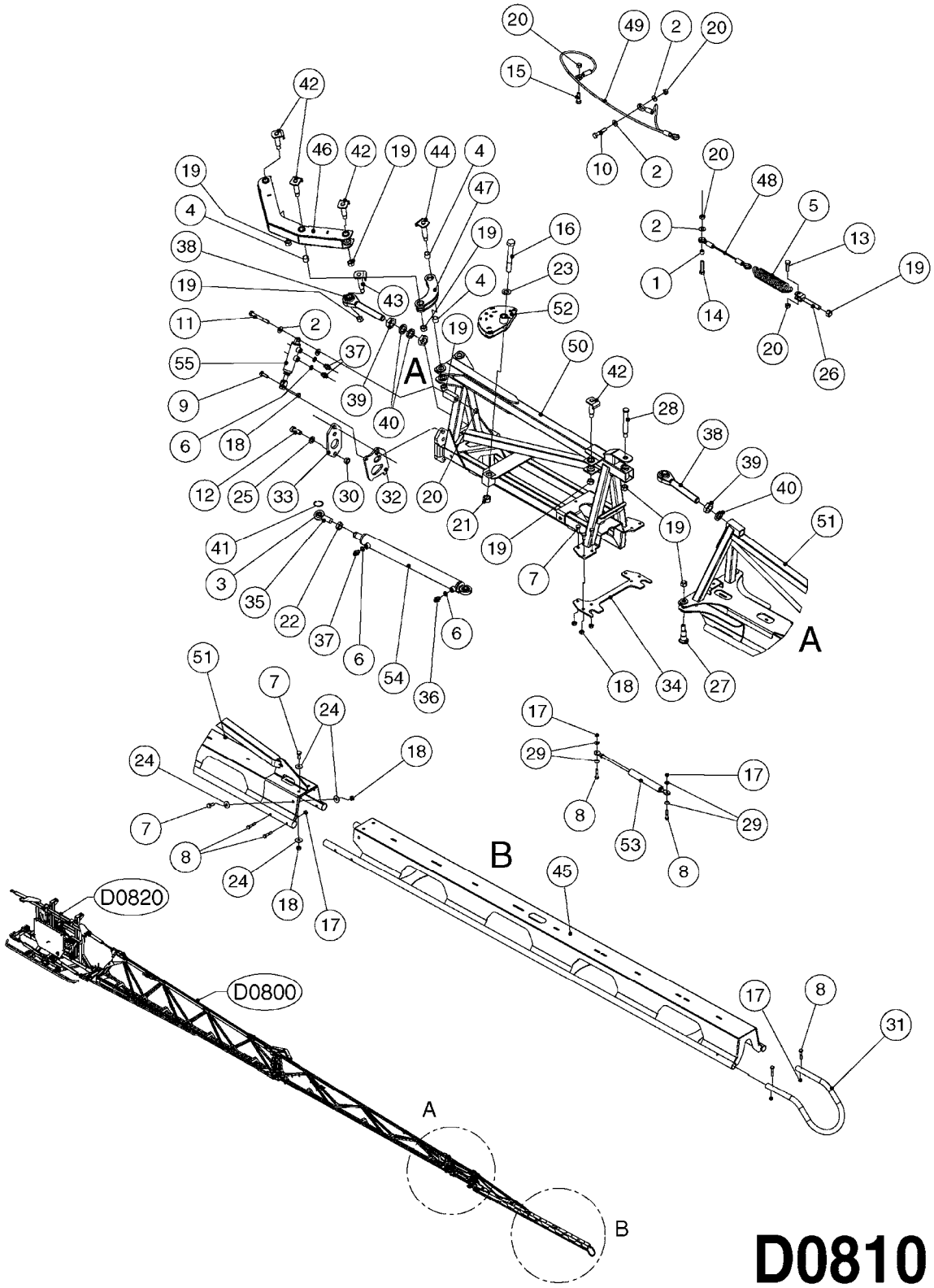

Agroparts: www.HARDI-INTERNATIONAL.com

BOOM TERRA FORCE OUTER
D0810-HIN, 12:09:17

Date 12.08.2020 11:38

Pos.	parts-n°	order qty	description
1	150861	1	BUSHING D16/D13X14
2	165557	1	WASHER D28.0/D12.2X2.0 SS
3	210730	1	BEARING F.LINK HEAD M20
4	210859	1	BUSH Ø23X20 L20
5	220929	1	DRAW SPRING D45.0/7.0-240.0
6	241404	1	DOWTY SEAL 1/4"
7	420604	1	BOLT HEX 8.8 DEL M10X25 FT DIN933
8	420744	1	BOLT HEX 8.8 DEL M8X40
9	421002	1	BOLT HEX 8.8 DEL M10X30 FT DIN933
10	430323	1	BOLT HEX 8.8 DEL M12X60
11	430367	1	BOLT HEX 8.8 DEL M12X100 DIN931
12	430581	1	BOLT HEX 8.8 DEL M16X40 FT
13	430721	1	BOLT HEX 8.8 DEL M12X40 FT
14	430870	1	BOLT HEX 8.8 DEL M12X55 FT
15	430878	1	BOLT HEX 8.8 DEL M12X45 DIN931
16	430902	1	BOLT HEX 8.8 M20X150
17	460143	1	LOCK NUT M8 SST A2 DIN985
18	460423	1	NUT HEX M10X1.50 LOCK DIN985A2 SS
19	460585	1	LOCKING NUT M16 DIN985 A2 SS
20	460703	1	NUT HEX M12X1.75 LOCK DIN985A2 SS
21	460806	1	NUT HEX M20X2.50 LOCK DIN985A2 SS
22	461200	1	NUT HEX M20X1.5 JAMB.
23	471129	1	WASHER, M20, Ø37/21.0X 3.0, SS
24	471140	1	WASHER D30/D10.5X2.5 STAINLESS
25	471168	1	PAIR OF WASHERS NL16 17X25,4x3,4
26	615348	1	CLEVIS TURNBUCKLE M16 RH
27	14093600	1	PIN D40/25/20 M16
28	14096900	1	PIN D25/19 M16 L=118 DEL
29	14099000	1	BUSHING D20/8 CHAMFER
30	15140000	1	BUSHING D25.5/16.5 L= 9 DEL
31	15167000	1	BREAKAWAY TIP TDZ
32	16296100	1	PLATE 8.0X140X146 DEL
33	16332900	1	PLATE 10.0X80X174, RED
34	16333000	1	BREAK AWAY PLATE TDZ
35	21092000	1	LINK HEAD M20 x D20 L=78 DELTA
36	23234100	1	HEX NIPPLE 1/4"-9/16" - 1.2mm
37	23234500	1	HEX NIPPLE 1/4" - 9/16"
38	28096700	1	EYEBOLT W/SWIVEL Ø19.3 M27 RH
39	46133100	1	JAM NUT M27 DIN 439 B DEL
40	47118500	1	NORDLOCK WASHER M27 LIM ZNK
41	48000603	1	SNAP RING, Ø36X1.5 F.210730
42	61056200	1	PIN D19.8 L=80 M16
43	61056300	1	PIN D19 L=76 M16
44	61061400	1	PIN D20 L=75/104 M16
45	63079100	1	BREAKAWAY TIP 2.5M TDZ 132' BOOM
45	63126600	1	BOOM WING BREAKAWAY TIP TDZ .5 120' BOOM
45	63143900	1	BREAKAWAY TIP, 0.5M, TDZ, RED 88'/90' BOOMS
45	63156100	1	BREAKAWAY TIP, 1.5M, TDZ, RED 100' BOOM
46	63095200	1	FOLD ARM SMALL TDZ
47	63095600	1	FOLD ARM SMALL OUTER TDZ
48	63108200	1	CABLE D7 L= 300
49	63108300	1	CABLE DOUBLE D7 L= 1115/525
50	63110700	1	2.OUTER, TDZ RH, RED 120' & 132' BOOMS
50	63110800	1	2.OUTER, TDZ LH, RED 120' & 132' BOOMS

BOOM TERRA FORCE OUTER
D0810-HIN, 12:09:17

Date 12.08.2020 11:38

Pos.	parts-nº	order qty	description
51	63110900	1	BOOM WING BREAKAWAY TDZ 88' - 132' BOOMS
52	63126900	1	BREAKAWAY PIVOT TDZ RIGHT, RED
52	63127000	1	BREAKAWAY PIVOT TDZ LEFT, RED
53	72743100	1	DAMPER CYLINDER TDZ BREAKAWAY
54	78127200	1	CYLINDER DOUB. D40/25 L=455
55	78127800	1	HYDRAULIC CYLINDER 25-40

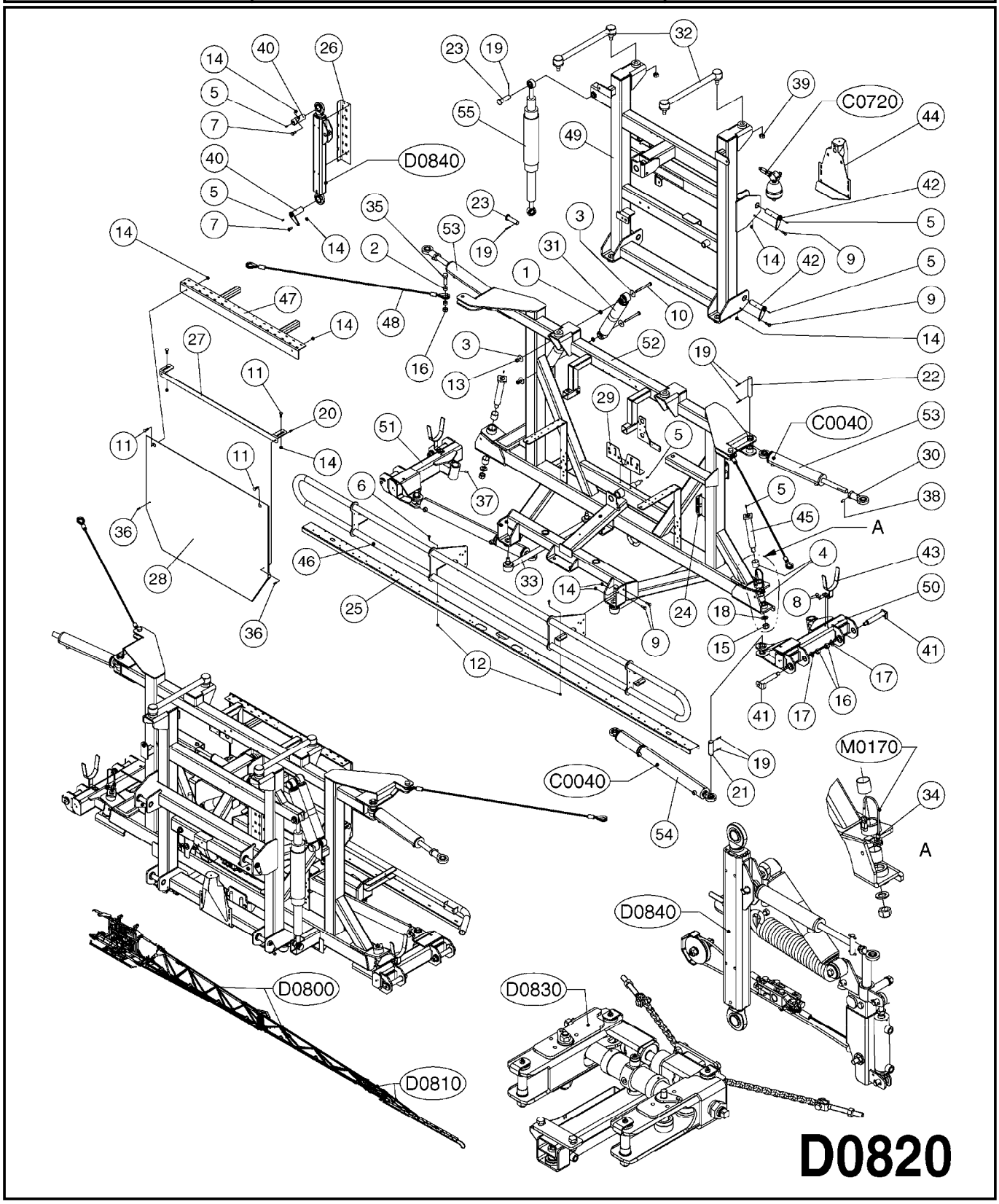
D0840
C0720
C0040
M0170
D0800
D0810
D0830
A
D0820

Agroparts: www.HARDI-INTERNATIONAL.com

BOOM TERRA FORCE CENTER PRE 2014
D0820-HIN, 19:02:18

Date 12.08.2020 11:38

Pos.	parts-n°	order qty	description
1	146240	1	BUSHING D26.0/13.0 L=7MM
2	146536	1	BUSHING
3	167156	1	WASHER D46.5/D12.4X2.5
4	210865	1	BUSHING 40mm40mm DU
5	283699	1	GREASE NIPPLE M6X1
6	420582	1	BOLT HEX 8.8 DEL M8X20 FT A2
7	420604	1	BOLT HEX 8.8 DEL M10X25 FT DIN933
8	420862	1	BOLT HEX 8.8 DEL M10X16 FT
9	421002	1	BOLT HEX 8.8 DEL M10X30 FT DIN933
10	430426	1	BOLT HEX 8.8 DEL M12X130
11	440737	1	BOLT CARRIAGE M10x25 SS
12	460143	1	LOCK NUT M8 SST A2 DIN985
13	460386	1	NUT HEX M12X1.75
14	460423	1	NUT HEX M10X1.50 LOCK DIN985A2 SS
15	460747	1	NUT HEX M24 LOCK
16	460806	1	NUT HEX M20X2.50 LOCK DIN985A2 SS
17	471129	1	WASHER, M20, Ø37/21.0X 3.0, SS
18	471130	1	WASHER, M24, Ø44/25.0X 4.0, SS
19	480733	1	PIN D6 X 40
20	480811	1	BLIND FASTENER M6 STAINLESS
21	14096300	1	PIN D30/6 L= 109
22	14096400	1	PIN D30/6 L= 154
23	14108600	1	AXLE Ø40/25.2 L=92
24	15125300	1	HOLLOW PROFILE 30X30X2/PUNCHED
25	16189703	1	CENTER TRACK 2014, TDZ/SPC
26	16296700	1	PLATE 2.0 X 88 X 490
27	16339800	1	PLATE 4.0X133X01120/BEND, RED
28	16340000	1	SHIELD, TERRA FORCE, RED
29	16349400	1	PLATE 3.0X220X310/BEND RED
30	21090300	1	LINK HEAD M30 X 2 X Ø30
31	28027400	1	SHOCK ABSORBER L=360/580 CM+
32	28066100	1	STEER.ARM COMPL.2XØ35 L=19.7"
33	28100900	1	STEERING ARM 2XØ35 L=745
34	28129300	1	INDUCTIVE SENSOR UNSHIELDED M12 L=1M SD=8MM
35	43000803	1	BOLT HEX M20 X 70MM DEL - FT
36	45001500	1	SCREW THUMB PLASTIC HEAD M6x20
37	45005100	1	SET SCREW M12X20 DIN 915
38	45006600	1	SET SCREW M12X25 SS DIN 913
39	46133500	1	NUT M20X1.5 DIN 980 V
40	61037600	1	PIN Ø34.8/L=94
41	61058000	1	PIN D30 L=158 M20
42	61061300	1	PIN, Ø30 L=122
43	61061800	1	HOSE HOLDER F.FEED HOSES
44	61068000	1	NORAC SENSOR BRACKET, CENTER
45	61093100	1	PINBOLT Ø40 L=223/M24
46	63038803	1	BUMPER, TDZ 2014
47	63100400	1	MOUNT BRACKET FOR EFC, TDZ
48	63108100	1	CABLE D12 L=1380
			PRE 2014
49	63109200	1	LIFT FRAME TERRA FORCE, RED
50	63111200	1	HINGE TERRA FORCE RH, RED
51	63111300	1	HINGE TERRA FORCE LH, RED
52	63111400	1	CENTER SECTION WIDE TDZ, RED
53	78128100	1	CYLINDER 70/30-300/TILT TDZ
54	78130900	1	CYLINDER, D70/40-500 TDZ FOLD
55	78133500	1	ROLL POSITION CYLINDER NO INTERNAL SENSOR

Agroparts: www.HARDI-INTERNATIONAL.com

BOOM TERRA FORCE CENTER 2014
D0821-HIN, 15:02:18

Page 0

Date 12.08.2020 11:38

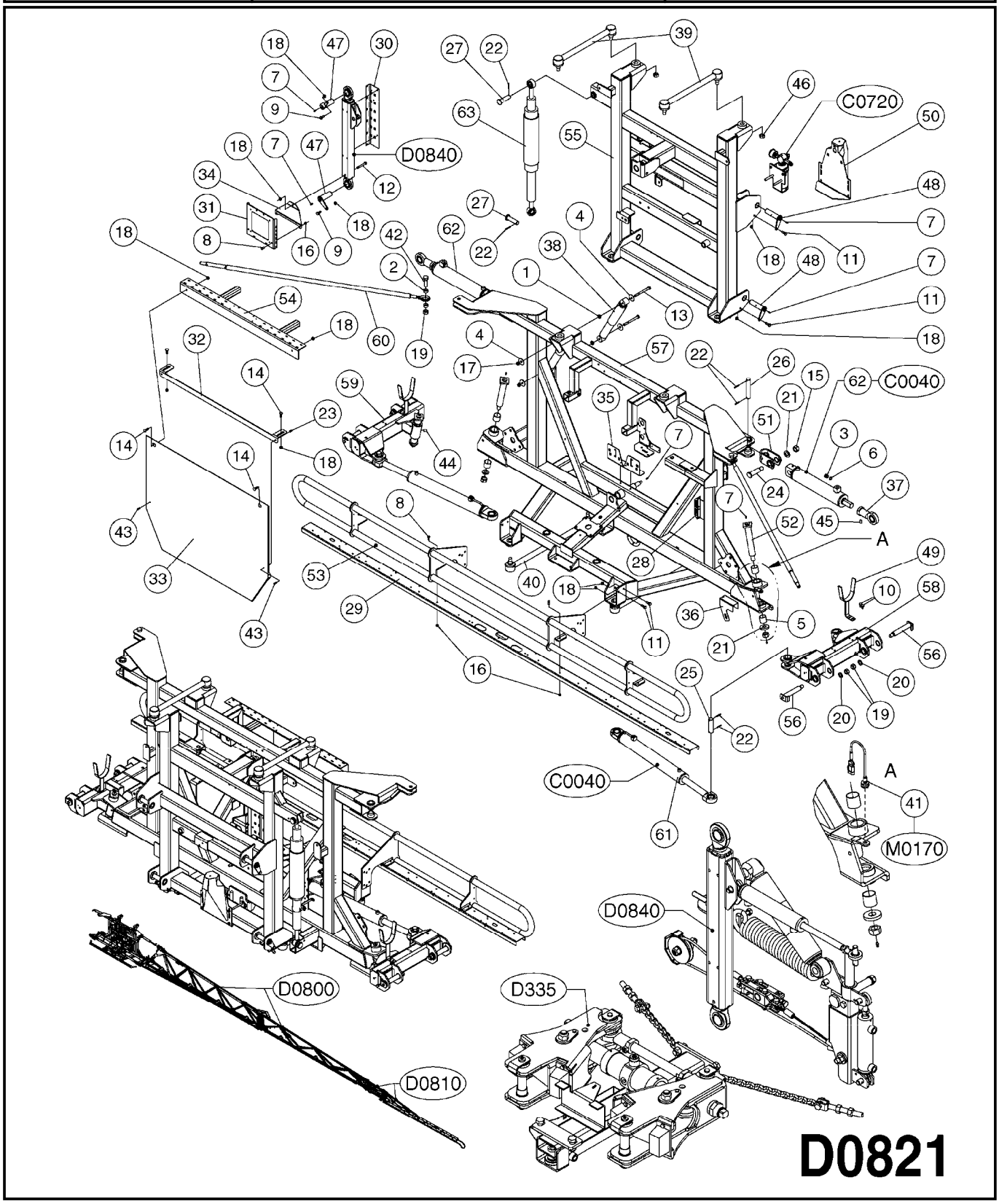

Agroparts: www.HARDI-INTERNATIONAL.com

BOOM TERRA FORCE CENTER 2014
D0821-HIN, 15:02:18

Date 12.08.2020 11:38

Pos.	parts-n°	order qty	description
1	146240	1	BUSHING D26.0/13.0 L=7MM
2	146536	1	BUSHING
3	146790	1	PLUG 3/8" RG L=20 SS
4	167156	1	WASHER D46.5/D12.4X2.5
5	210865	1	BUSHING 40mm40mm DU
6	240866	1	DOWTYSEAL 3/8"
7	283699	1	GREASE NIPPLE M6X1
8	420582	1	BOLT HEX 8.8 DEL M8X20 FT A2
9	420604	1	BOLT HEX 8.8 DEL M10X25 FT DIN933
10	420862	1	BOLT HEX 8.8 DEL M10X16 FT
11	421002	1	BOLT HEX 8.8 DEL M10X30 FT DIN933
12	421222	1	BOLT HEX 8.8 DEL M10X75 FT
13	430426	1	BOLT HEX 8.8 DEL M12X130
14	440737	1	BOLT CARRIAGE M10x25 SS
15	460747	1	NUT HEX M24 LOCK
16	460143	1	LOCK NUT M8 SST A2 DIN985
17	460386	1	NUT HEX M12X1.75
18	460423	1	NUT HEX M10X1.50 LOCK DIN985A2 SS
19	460806	1	NUT HEX M20X2.50 LOCK DIN985A2 SS
20	471129	1	WASHER, M20, Ø37/21.0X 3.0, SS
21	471130	1	WASHER, M24, Ø44/25.0X 4.0, SS
22	480733	1	PIN D6 X 40
23	480811	1	BLIND FASTENER M6 STAINLESS
24	14057100	1	PIN Ø30/M24 L=89 DELTA
25	14096300	1	PIN D30/6 L= 109
26	14096400	1	PIN D30/6 L= 154
27	14108600	1	AXLE Ø40/25.2 L=92
28	15125300	1	HOLLOW PROFILE 30X30X2/PUNCHED
29	16189703	1	CENTER TRACK 2014, TDZ/SPC
30	16296700	1	PLATE 2.0 X 88 X 490
31	16299900	1	PLATE 3 X 190 X 200
32	16339800	1	PLATE 4.0X133X01120/BEND, RED
33	16340000	1	SHIELD, TERRA FORCE, RED
34	16343000	1	PLADE 3,0X 139X 250/BUKKET
35	16349400	1	PLATE 3.0X220X310/BEND RED
36	16395000	1	FOLD SENSOR GAURD, TDZ, SS
37	21091000	1	LINK HEAD M36 X 2 X Ø35
38	28027400	1	SHOCK ABSORBER L=360/580 CM+
39	28066100	1	STEER.ARM COMPL.2XØ35 L=19.7"
40	28100900	1	STEERING ARM 2XØ35 L=745
41	28129300	1	INDUCTIVE SENSOR UNSHIELDED M12 L=1M SD=8MM
42	43000803	1	BOLT HEX M20 X 70MM DEL - FT
43	45001500	1	SCREW THUMB PLASTIC HEAD M6x20
44	45005100	1	SET SCREW M12X20 DIN 915
45	45006600	1	SET SCREW M12X25 SS DIN 913
46	46133500	1	NUT M20X1.5 DIN 980 V
47	61037600	1	PIN Ø34.8/L=94
48	61061300	1	PIN, Ø30 L=122
49	61061800	1	HOSE HOLDER F.FEED HOSES
50	61068000	1	NORAC SENSOR BRACKET, CENTER
51	61078300	1	SWIVEL PART F. TILT TDZ, RED
52	61093100	1	PINBOLT Ø40 L=223/M24
53	63038803	1	BUMPER, TDZ 2014
54	63100400	1	MOUNT BRACKET FOR EFC, TDZ
55	63109200	1	LIFT FRAME TERRA FORCE, RED
56	63111200	1	HINGE TERRA FORCE RH, RED
57	63111400	1	CENTER SECTION WIDE TDZ, RED
58	63118100	1	TDZ RIGHT HINGE (RED)
59	63118300	1	TDZ LEFT HINGE (RED)
60	63199800	1	Ø12 WIRE L= 1610/M24
61	78131300	1	CYLINDER, D70/40-500 TDZ FOLD

Pos.	parts-nº	order qty	description
62	78131800	1	CYLINDER 80/40-300/ TILT TDZ
63	78133500	1	ROLL POSITION CYLINDER NO INTERNAL SENSOR

Agroparts: www.HARDI-INTERNATIONAL.com

BOOM TERRA FORCE CENTER POM. YAW
D0822-HIN, 22:08:19

Page 0

Date 12.08.2020 11:38

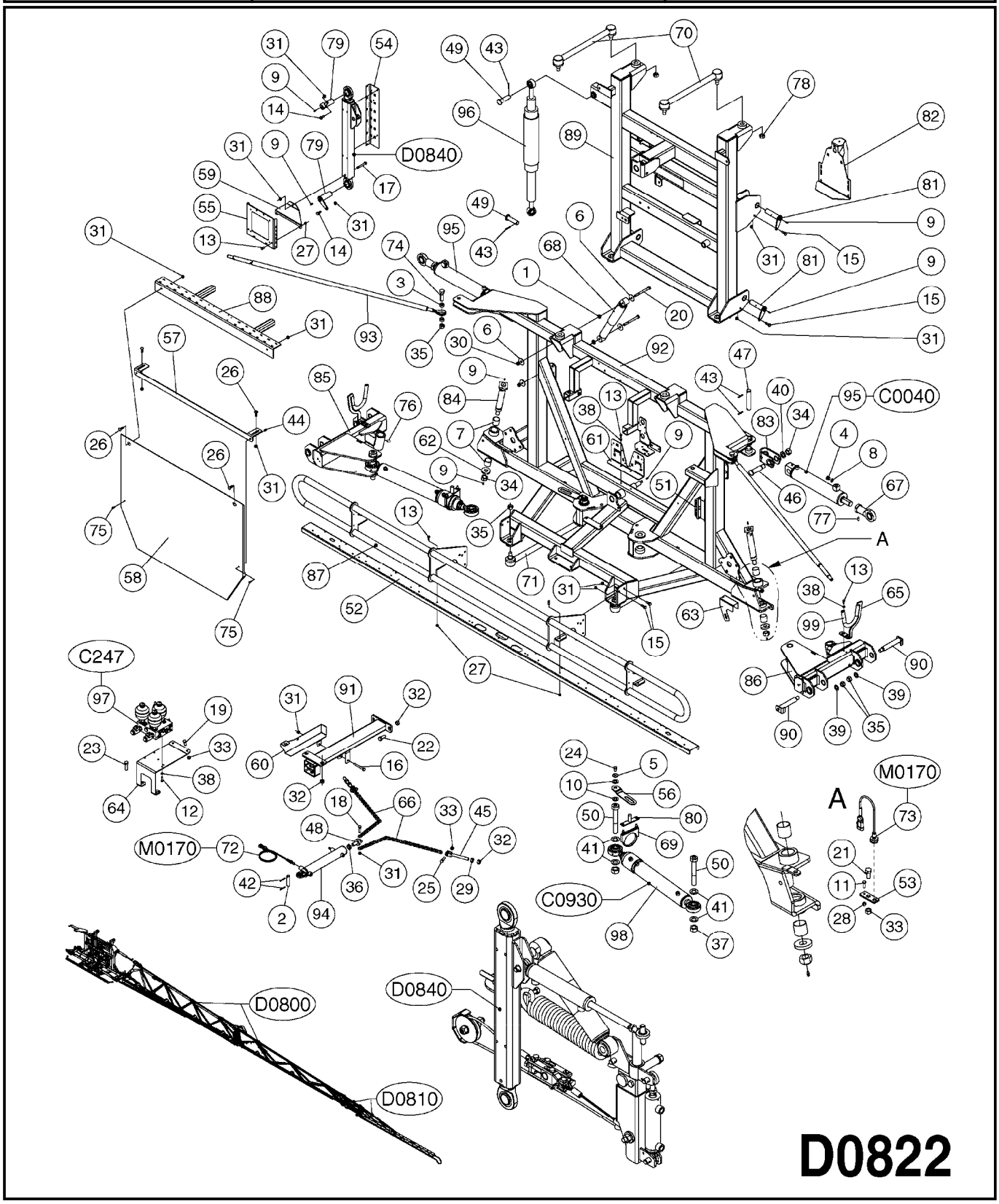

Agroparts: www.HARDI-INTERNATIONAL.com

BOOM TERRA FORCE CENTER POM.
YAW
D0822-HIN, 22:08:19

Date 12.08.2020 11:38

Pos.	parts-n°	order qty	description
1	146240	1	BUSHING D26.0/13.0 L=7MM
2	146390	1	PIN D19.8 X 95
3	146536	1	BUSHING
4	146790	1	PLUG 3/8" RG L=20 SS
5	160624	1	WASHER PLATE 6/13 X3
6	167156	1	WASHER D46.5/D12.4X2.5
7	210865	1	BUSHING 40mm40mm DU
8	240866	1	DOWTYSEAL 3/8"
9	283699	1	GREASE NIPPLE M6X1
10	390464	1	WASHER NYLON 40/21/3
11	410362	1	BOLT HEX 8.8 SS M6X20
12	420567	1	BOLT HEX 8.8 DEL M8X30 FT
13	420582	1	BOLT HEX 8.8 DEL M8X20 FT A2
14	420604	1	BOLT HEX 8.8 DEL M10X25 FT DIN933
15	421002	1	BOLT HEX 8.8 DEL M10X30 FT DIN933
16	421061	1	BOLT HEX 8.8 DEL M10X100 DIN931
17	421222	1	BOLT HEX 8.8 DEL M10X75 FT
18	421226	1	BOLT HEX 8.8 DEL M10X45
19	430286	1	BOLT HEX 8.8 DEL M12X30 FT
20	430426	1	BOLT HEX 8.8 DEL M12X130
21	430522	1	BOLT HEX 8.8 DEL M12X25 FT
22	430581	1	BOLT HEX 8.8 DEL M16X40 FT
23	430637	1	BOLT HEX 8.8 DEL M16X50 FT
24	430662	1	BOLT HEX 8.8 DEL M12X20 FT
25	430721	1	BOLT HEX 8.8 DEL M12X40 FT
26	440737	1	BOLT CARRIAGE M10x25 SS
27	460143	1	LOCK NUT M8 SST A2 DIN985
28	460261	1	NUT HEX M6X1.00 LOCK DIN985 A2 SS
29	460327	1	NUT HEX M16X2
30	460386	1	NUT HEX M12X1.75
31	460423	1	NUT HEX M10X1.50 LOCK DIN985A2 SS
32	460585	1	LOCKING NUT M16 DIN985 A2 SS
33	460703	1	NUT HEX M12X1.75 LOCK DIN985A2 SS
34	460747	1	NUT HEX M24 LOCK
35	460806	1	NUT HEX M20X2.50 LOCK DIN985A2 SS
36	461200	1	NUT HEX M20X1.5 JAMB.
37	461316	1	NUT HEX LOCK M30X3.5 DIN 985
38	471126	1	WASHER, M8, Ø16/ 8.4X 1.6, SS
39	471129	1	WASHER, M20, Ø37/21.0X 3.0, SS
40	471130	1	WASHER, M24, Ø44/25.0X 4.0, SS
41	471131	1	WASHER, M30, Ø56/31.0X 4.0, SS
42	480730	1	SPRING DOWEL PIN 5X30 SST
43	480733	1	PIN D6 X 40
44	480811	1	BLIND FASTENER M6 STAINLESS
45	615561	1	CLEVIS F.TURNBUCKLE M16 RH
46	14057100	1	PIN Ø30/M24 L=89 DELTA
47	14096400	1	PIN D30/6 L= 154
48	14098900	1	PIN D45/20/M20 L=80
49	14108600	1	AXLE Ø40/25.2 L=92
50	14707504	1	PIN M30 X 200 LONG
51	15125300	1	HOLLOW PROFILE 30X30X2/PUNCHED
52	16189703	1	CENTER TRACK 2014, TDZ/SPC
53	16213903	1	BOOM SENSOR EXT. BRKT, TDZ
54	16296700	1	PLATE 2.0 X 88 X 490
55	16299900	1	PLATE 3 X 190 X 200
56	16334004	1	PLATE 5X244X50
57	16339800	1	PLATE 4.0X133X01120/BEND, RED
58	16340000	1	SHIELD, TERRA FORCE, RED
59	16343000	1	PLADE 3,0X 139X 250/BUKKET
60	16345200	1	SENSOR COVER PEND.LOCK TDZ
61	16349400	1	PLATE 3.0X220X310/BEND RED

Pos.	parts-n°	order qty	description
62	16375500	1	WASHER 10.0X60X25 RED
63	16395000	1	FOLD SENSOR GAURD, TDZ, SS
64	16413000	1	PLATE 4 X 573 X 180
65	16485000	1	HOSEBRACKET DTZ
66	19487100	1	CHAIN D7X21 L=640
67	21091000	1	LINK HEAD M36 X 2 X Ø35
68	28027400	1	SHOCK ABSORBER L=360/580 CM+
69	28060004	1	EXHAUST CLAMP Ø102
70	28066100	1	STEER.ARM COMPL.2XØ35 L=19.7"
71	28100900	1	STEERING ARM 2XØ35 L=745
72	28102400	1	INDUCTIVE SENSOR M12 F. CYL.
73	28129300	1	INDUCTIVE SENSOR UNSHIELDED M12 L=1M SD=8MM
74	43000803	1	BOLT HEX M20 X 70MM DEL - FT
75	45001500	1	SCREW THUMB PLASTIC HEAD M6x20
76	45005100	1	SET SCREW M12X20 DIN 915
77	45006600	1	SET SCREW M12X25 SS DIN 913
78	46133500	1	NUT M20X1.5 DIN 980 V
79	61037600	1	PIN Ø34.8/L=94
80	61049004	1	ANTI-ROTATION BRACKET B3/TR5/TDZ
81	61061300	1	PIN, Ø30 L=122
82	61068000	1	NORAC SENSOR BRACKET, CENTER
83	61078300	1	SWIVEL PART F. TILT TDZ, RED
84	61093100	1	PINBOLT Ø40 L=223/M24
85	63037403	1	HINGE, LEFT, TDZ/TR5, RED
86	63037603	1	HINGE, RIGHT, TDZ/TR5, RED
87	63038803	1	BUMPER, TDZ 2014
88	63100400	1	MOUNT BRACKET FOR EFC, TDZ
89	63109200	1	LIFT FRAME TERRA FORCE, RED
90	63111200	1	HINGE TERRA FORCE RH, RED
91	63174800	1	YAW LOWER CONSOLE
92	63176600	1	CENTERSECTION WIDE TDZ - PAINTED
93	63199800	1	Ø12 WIRE L= 1610/M24
94	78130600	1	DOB.CYL.Ø50/25-240/M. SENSOR
95	78131800	1	CYLINDER 80/40-300/ TILT TDZ
96	78133500	1	ROLL POSITION CYLINDER NO INTERNAL SENSOR
97	78513104	1	HYD BLOCK WITH ACC. - HYDAC
98	78513204	1	CYLINDER 80/45 L= 380 WITH DAMP
99	92703203	1	HOSE R X3/4" X300PSI WP X0012"

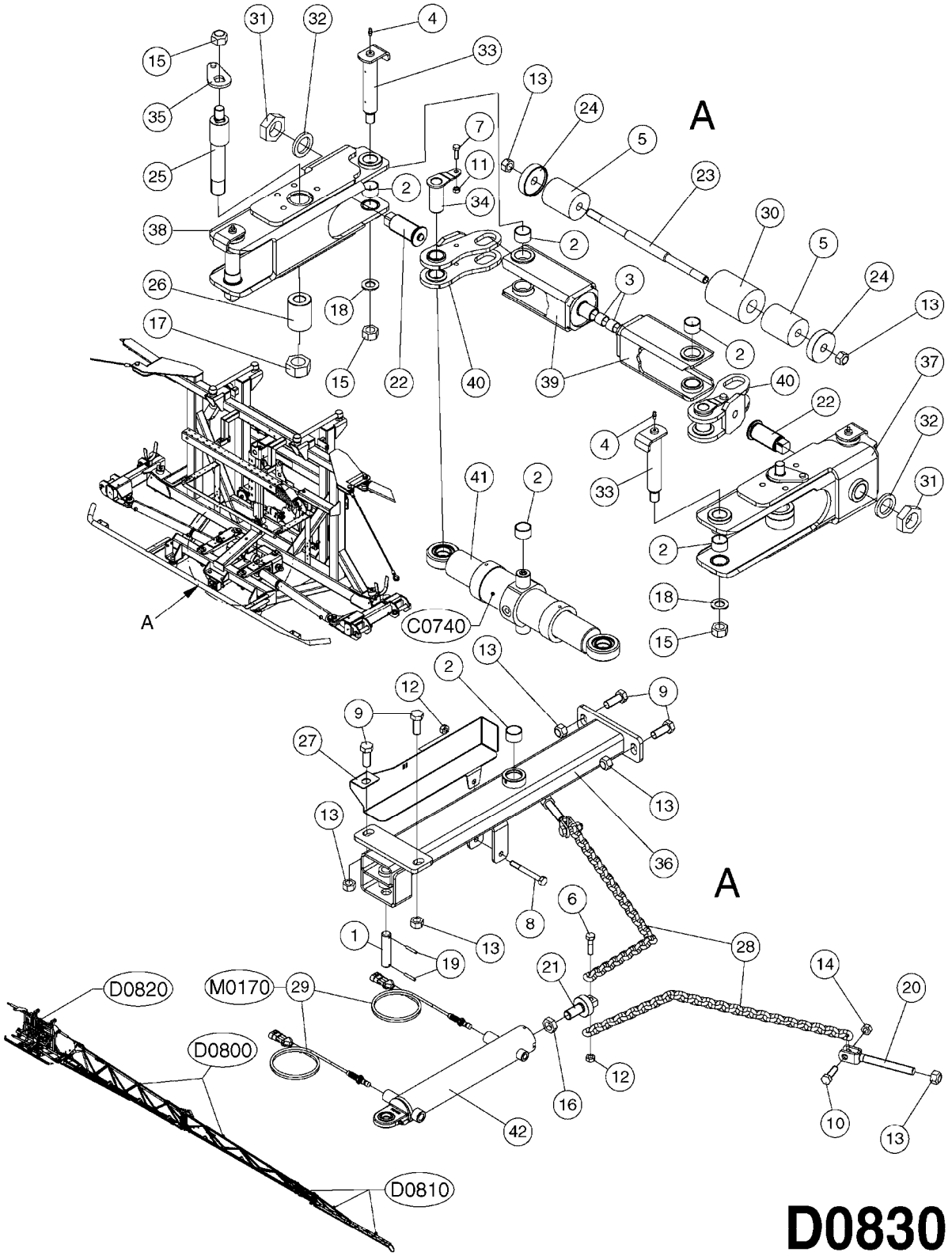

D0830

Agroparts: www.HARDI-INTERNATIONAL.com

TERRA FORCE YAW/PEND.LOCK PRE 2014
D0830-HIN, 04:12:17

Date 12.08.2020 11:38

Pos.	parts-nº	order qty	description
1	146390	1	PIN D19.8 X 95
2	210858	1	BUSHING 034/30 L=20
3	210859	1	BUSH Ø23X20 L20
4	283699	1	GREASE NIPPLE M6X1
5	390789	1	RUBBER DAMPENER D63/17 L=80
6	420965	1	M10X40 MACHINE SCREW STAINLESS
7	421046	1	BOLT HEX M8X25/25 A2 SS DIN933
8	421218	1	BOLT HEX 8.8 DEL M10X90
9	430581	1	BOLT HEX 8.8 DEL M16X40 FT
10	430721	1	BOLT HEX 8.8 DEL M12X40 FT
11	460143	1	LOCK NUT M8 SST A2 DIN985
12	460423	1	NUT HEX M10X1.50 LOCK DIN985A2 SS
13	460585	1	LOCKING NUT M16 DIN985 A2 SS
14	460703	1	NUT HEX M12X1.75 LOCK DIN985A2 SS
15	460806	1	NUT HEX M20X2.50 LOCK DIN985A2 SS
16	461200	1	NUT HEX M20X1.5 JAMB.
17	461316	1	NUT HEX LOCK M30X3.5 DIN 985
18	471129	1	WASHER, M20, Ø37/21.0X 3.0, SS
19	480730	1	SPRING DOWEL PIN 5X30 SST
20	615561	1	CLEVIS F.TURNBUCKLE M16 RH
21	14098900	1	PIN D45/20/M20 L=80
22	14103300	1	YAW TAP Ø45/M36X3 DEL
23	14103500	1	AXLE Ø20/M16 L=350 DEL TDZ
24	14103600	1	BUSHING D70/65/D17 DELTA
25	14112100	1	PIN D40/30/M30 L=206 DEL
26	14112200	1	BUSHING D40/30 L=70 ECCENTRIC
27	16345700	1	COVER F.LOCK TDZ, RED
28	19487100	1	CHAIN D7X21 L=640
29	28102400	1	INDUCTIVE SENSOR M12 F. CYL.
30	39131600	1	RUBBER BUMPER D80/30 L=1000 SH
31	46132800	1	NUT, JAMB M36X3 DIN439 DEL
32	47118300	1	NORDLOCK WASHER M36 LIM ZNK
33	61064000	1	PIN D30.0 L=142 M20 DEL
34	61065800	1	PIN BOLT D19.8 L=80 M16 DEL
35	61074400	1	TOP PLATE TDZ, YAW-SHAFT DELTA
36	63111500	1	YAW LOWER CONSOLE, RED
37	63126200	1	YAW BRACKET TDZ RIGHT, RED
38	63126300	1	YAW BRACKET TDZ LEFT, RED
39	63126400	1	BUFFER BRACKET TDZ, RED
40	63126500	1	YAW BRACKET TDZ, RED
41	78128500	1	CYLINDER DOUBLE PLUNGER D60X75
42	78130600	1	DOB.CYL.Ø50/25-240/M. SENSOR

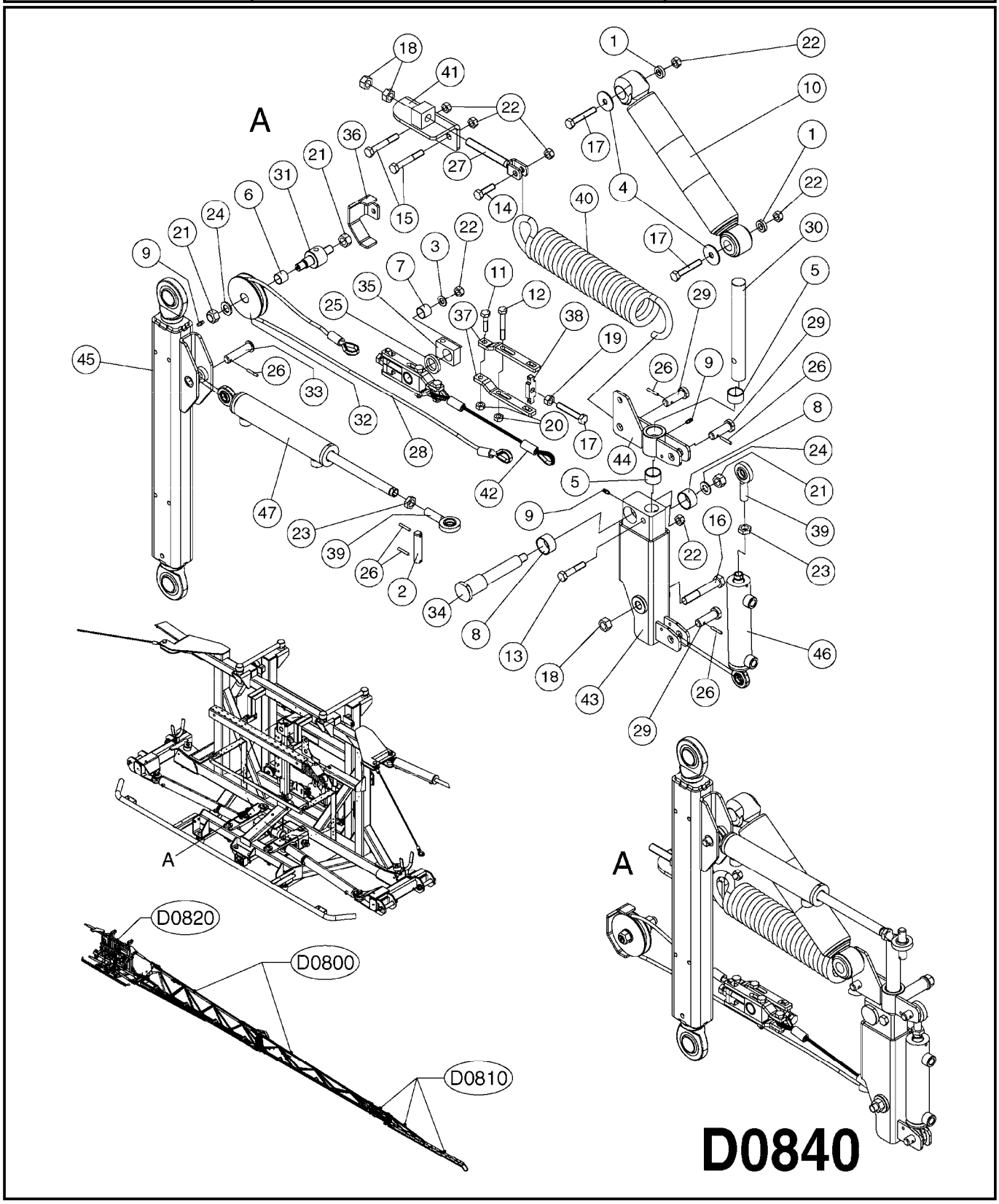
A
A
A
D0820
D0800
D0810
D0840

Agroparts: www.HARDI-INTERNATIONAL.com

TERRA FORCE DYNAMIC CENTER
D0840-HIN, 10:01:18

Date 12.08.2020 11:38

Pos.	parts-nº	order qty	description
1	146240	1	BUSHING D26.0/13.0 L=7MM
2	146498	1	PIN D16.8 X 75
3	160624	1	WASHER PLATE 6/13 X3
4	167156	1	WASHER D46.5/D12.4X2.5
5	210858	1	BUSHING 034/30 L=20
6	210859	1	BUSH Ø23X20 L20
7	210862	1	BUSHING 28X25X20
8	210866	1	BUSHING D39/35 L=20
9	283699	1	GREASE NIPPLE M6X1
10	285668	1	SHOCK ABSORBER L=300/465
11	420965	1	M10X40 MACHINE SCREW STAINLESS
12	421164	1	BOLT HEX 8.8 DEL M10X70
13	430323	1	BOLT HEX 8.8 DEL M12X60
14	430721	1	BOLT HEX 8.8 DEL M12X40 FT
15	430846	1	BOLT HEX 8.8 DEL M12X80
16	430861	1	BOLT HEX 8.8 DEL M16X100 FT
17	430874	1	SCREW SET 8.8 DEL M12X70 FT
18	460327	1	NUT HEX M16X2
19	460386	1	NUT HEX M12X1.75
20	460423	1	NUT HEX M10X1.50 LOCK DIN985A2 SS
21	460585	1	LOCKING NUT M16 DIN985 A2 SS
22	460703	1	NUT HEX M12X1.75 LOCK DIN985A2 SS
23	461198	1	NUT HEX M16X2 JAMB
24	471128	1	WASHER, M16, Ø30/17.0X 3.0, SS
25	471130	1	WASHER, M24, Ø44/25.0X 4.0, SS
26	480730	1	SPRING DOWEL PIN 5X30 SST
27	615561	1	CLEVIS F.TURNBUCKLE M16 RH
28	637697	1	CABLE CENTER MEGA 7mm x 1230mm
29	14018400	1	PIN D16.8 L=52 D26/NV24 DEL
30	14053400	1	AXLE D30.0 L=300 /D12.2
31	14053800	1	DBLE.PIN D40 M16/M16 L=101 DEL
32	14053900	1	PULLEY D100
33	14070900	1	PIN D17 L=70 DEL
34	14095900	1	PIN D45/35/25 M16 L=189
35	14096000	1	BLOCK 40X20 D28/10.5
36	16311900	1	CLAMP F.PULLEY
37	16312100	1	PLATE 8MM, D10.5/BEND
38	16312200	1	PLATE 10MM, D10.5/CUT
39	21091900	1	LINK HEAD M16 x D17 DELTA
40	22097500	1	SPRING D79.0 /14 L=450
41	61067200	1	SPRING BRACKET TDZ, RED
42	63108200	1	CABLE D7 L= 300
43	63109000	1	SUSPENSION ARM TDZ, RED
44	63109100	1	DIAMOND ARM TDZ, RED
45	63111100	1	PENDULUM SUPER FORCE, RED
46	78123100	1	CYLINDER DOUBLE D40/20-120
47	78129900	1	CYLINDER DOUBLE D40/20 180 1/4

HARDI	**Agroparts: www.HARDI-INTERNATIONAL.com**	
	TERRA FORCE TRANSPORT BRACKET D0850-HIN, 01:07:19	Page 0
		Date 12.08.2020 11:38

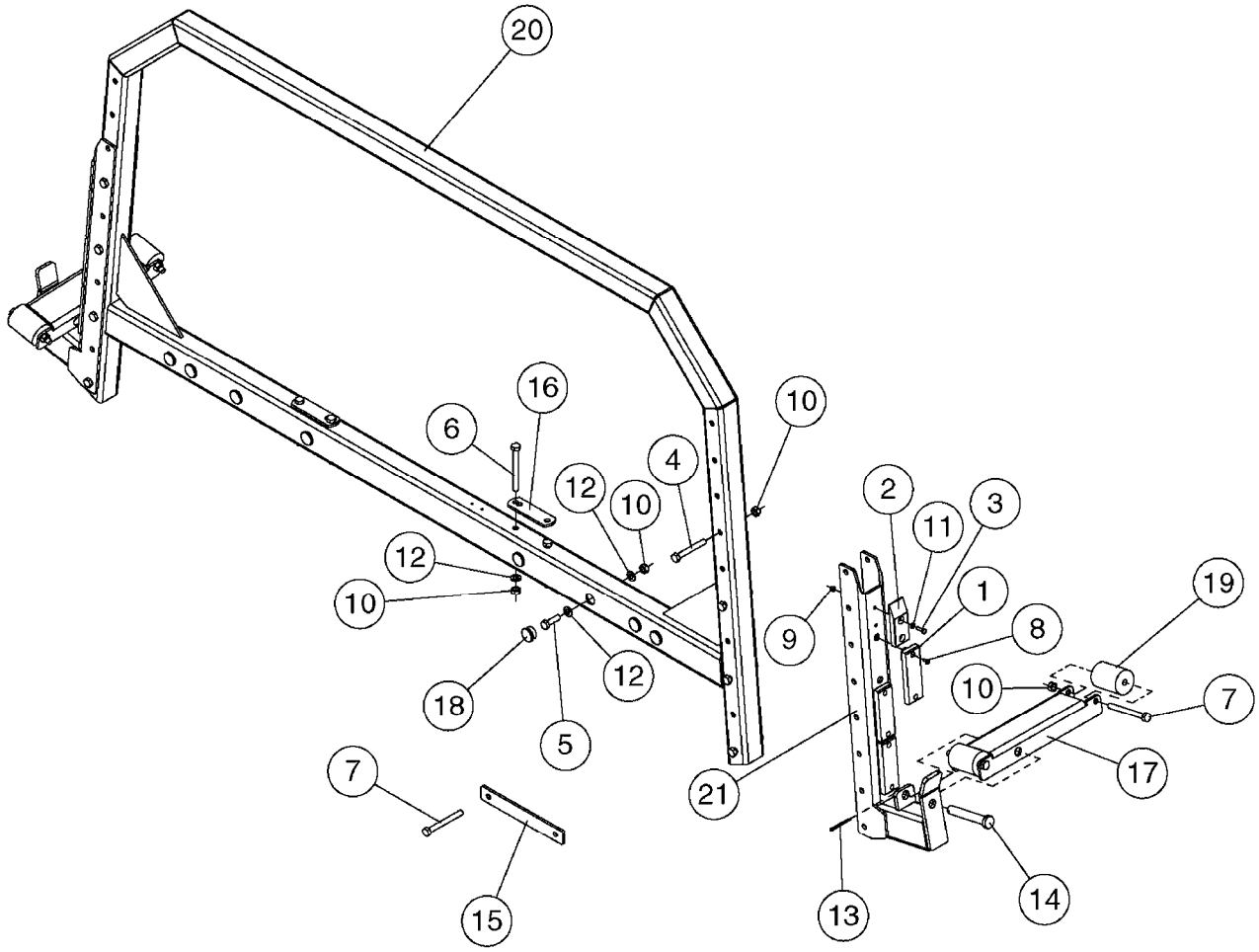

D0850

Agroparts: www.HARDI-INTERNATIONAL.com

TERRA FORCE TRANSPORT BRACKET
D0850-HIN, 01:07:19

Date 12.08.2020 11:38

Pos.	parts-nº	order qty	description
1	334135	1	SLIDE SHOE 140X45X15
2	390826	1	SLIDE PAD F.TRANSPORT BKT.CM/D
3	410362	1	BOLT HEX 8.8 SS M6X20
4	430485	1	BOLT HEX 8.8 DEL M12X90
5	430721	1	BOLT HEX 8.8 DEL M12X40 FT
6	430824	1	BOLT HEX 8.8 DEL M12X120
7	430892	1	BOLT HEX 8.8 DEL M12X110
8	440708	1	SCREW M5.5X16 SELF TAPPING SS
9	460261	1	NUT HEX M6X1.00 LOCK DIN985 A2 SS
10	460703	1	NUT HEX M12X1.75 LOCK DIN985A2 SS
11	471125	1	WASHER M6U 6.4X14X1.2,A2 SS
12	471127	1	WASHER, M12, Ø24/13X24X2.5 SS
13	480384	1	PIN COTTER 3/16 x 1-1/2"
14	14105000	1	PIN Ø30/20/6 L=131 DELTA
15	16118303	1	PLATE F. CM8500-10000 TRANSPORT
16	16138700	1	PLATE F. TRANSPORT CROSS BAR
17	16345600	1	BRACKET F.TDZ TRANSPORT ROLLER
18	28046900	1	COVER PLUG 1" BLACK
19	39001801	1	ROLLER FOR TRANSPORT, POM
20	63040703	1	TRANSPORT BRACKET, TDZ, CM, RED
21	63040803	1	TRANSPORT REST, TDZ, CM, RED

BOOM WHEEL,FTZ,HD,AIR-BAG
D0860-HIN, 01:01:16

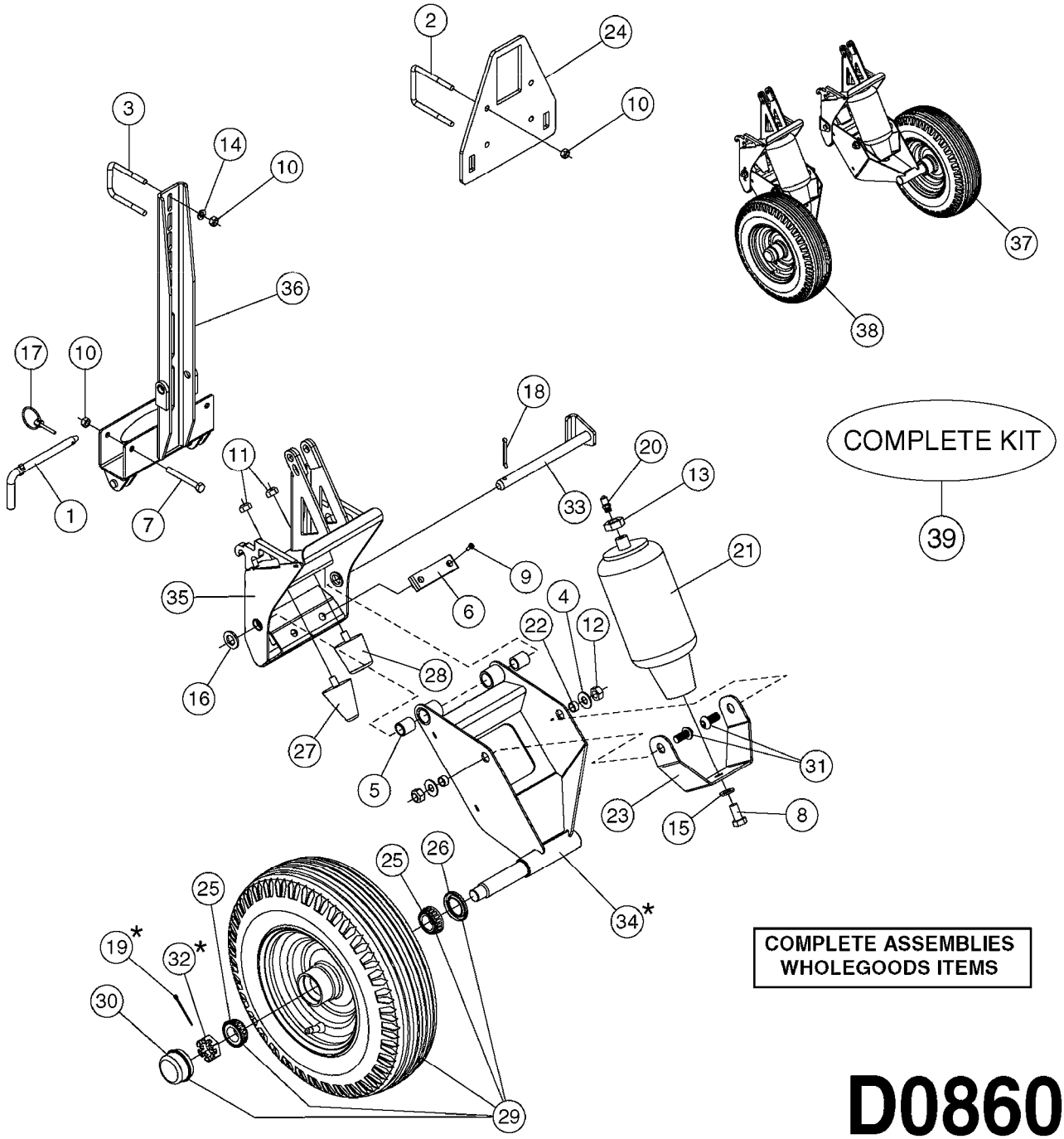

COMPLETE ASSEMBLIES
WHOLEGOODS ITEMS

D0860

Agroparts: www.HARDI-INTERNATIONAL.com

BOOM WHEEL,FTZ,HD,AIR-BAG
D0860-HIN, 01:01:16

Date 12.08.2020 11:38

Pos.	parts-nº	order qty	description
1	142947	1	LOCKING PAWL Ø12 L=108, DELTA
2	146843	1	BOLT U M8 F.60 x 60
3	147516	1	U-BOLT M8-50x50
4	165557	1	WASHER D28.0/D12.2X2.0 SS
5	333697	1	BUSHING D22/D16x25
6	333956	1	SLIDE SHOE 91X25X10
7	421201	1	BOLT HEX 8.8 DEL M8X70
8	430923	1	BOLT HEX 1/2"-13 L=1" GR.2 SS
9	440665	1	SCREW M4.2X16 STAINLESS
10	460143	1	LOCK NUT M8 SST A2 DIN985
11	460423	1	NUT HEX M10X1.50 LOCK DIN985A2 SS
12	460703	1	NUT HEX M12X1.75 LOCK DIN985A2 SS
13	461248	1	NUT HEX JAM 3/4"-16 UNF
14	471126	1	WASHER, M8, Ø16/ 8.4X 1.6, SS
15	471127	1	WASHER, M12, Ø24/13X24X2.5 SS
16	471128	1	WASHER, M16, Ø30/17.0X 3.0, SS
17	480244	1	PIN SNAP D4.5
18	480384	1	PIN COTTER 3/16 x 1-1/2"
19	10008603	1	COTTER PIN 1/8"X 1-1/2"
			INCLUDED WITH PIVOT ARM
20	10480503	1	TANK VALVE 1/8"NPT
21	10492403	1	AIR BAG FOR TWIN SUSPENSION
22	14015203	1	BUSH D16 X D12.5 L=8
23	16121603	1	BOOM WHEEL AIR BAG BRACKET
24	16134703	1	BOOM WHEEL STORAGE BRACKET
25	21002303	1	BEARING, TAPPERED, 1" SPINDLE
26	21002603	1	SEAL,GREASE,F.BOOM WHEEL
27	24003503	1	RUBBER BUFFER D42 X 50 M172
28	24003603	1	RUBBER BUFFER D50 X 50 M174
29	28059803	1	WHEEL & TIRE ASSY 4.8/4.0-8
30	29003603	1	HUB CAP F. 1000LB HUB
31	43001003	1	BTTN HD SCREW M12 X 25 SS
32	46001803	1	NUT, CASTLE F. HD BOOM WHEEL
			INCLUDED WITH PIVOT ARM
33	61014803	1	BOOM WHEEL PIVOT PIN, PLATED
34	63030603	1	BOOM WHEEL PIVOT ARM RH
			INCLUDES CASTLE NUT & COTTER PIN
34	63030703	1	BOOM WHEEL PIVOT ARM LH
			INCLUDES CASTLE NUT & COTTER PIN
35	63030803	1	BOOM WHEEL MOUNT CRADLE
36	63033103	1	BOOM WHEEL MOUNT
37	70088103	1	BOOM WHEEL ASSEMBLY, LEFT
38	70088203	1	BOOM WHEEL ASSEMBLY, RIGHT
39	83353003	1	BOOM WHEEL KIT,FTZ,HD,AIR-BAG
			COMPLETE PAIR WITH HARDWARE

TRANSPORT BKTS - SPC PRESIDIO
D0870-HIN, 24:06:16

Date 12.08.2020 11:38

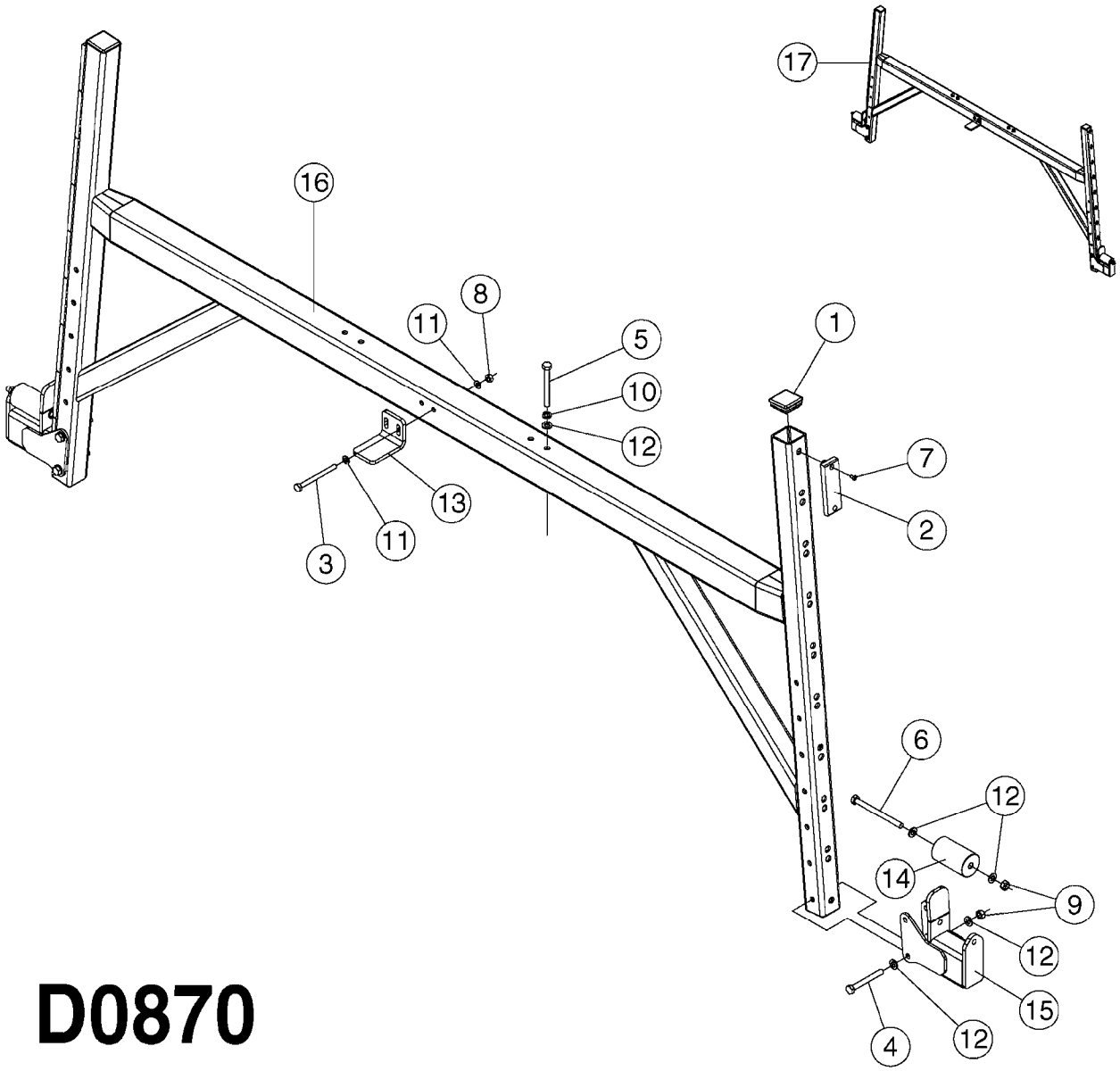

D0870

Agroparts: www.HARDI-INTERNATIONAL.com

TRANSPORT BKTS - SPC PRESIDIO
D0870-HIN, 24:06:16

Date 12.08.2020 11:38

Pos.	parts-nº	order qty	description
1	284645	1	PLUG 60x60x2
2	334135	1	SLIDE SHOE 140X45X15
3	420663	1	BOLT HEX 8.8 DEL M10X120 A4-80
4	430872	1	BOLT HEX 8.8 DEL M12X100 FT
5	430892	1	BOLT HEX 8.8 DEL M12X110
6	430914	1	BOLT HEX 8.8 DEL M12X150
7	440708	1	SCREW M5.5X16 SELF TAPPING SS
8	460423	1	NUT HEX M10X1.50 LOCK DIN985A2 SS
9	460703	1	NUT HEX M12X1.75 LOCK DIN985A2 SS
10	470466	1	WASHER D21.1/D12.2X2.5 LOCK
11	471122	1	WASHER, M10, Ø20/10.5X 2.0, SS
12	471127	1	WASHER, M12, Ø24/13X24X2.5 SS
13	16181703	1	LOCK RINSE TANK, PRESIDIO
14	39003603	1	ROLLER FOR TRANSPORT, POM.
15	63043503	1	TRANSPORT REST, SPC, GRAY
16	63043603	1	TRANSPORT BRACKET, PRESIDIO
17	70118103	1	TRANSPORT KIT, PRESIDIO 2700

HARDI	**Agroparts: www.HARDI-INTERNATIONAL.com**	
	TRANSPORT BKT HAZ ALPHA RH D0880-HIN, 05:01:17	Page 0 Date 12.08.2020 11:38

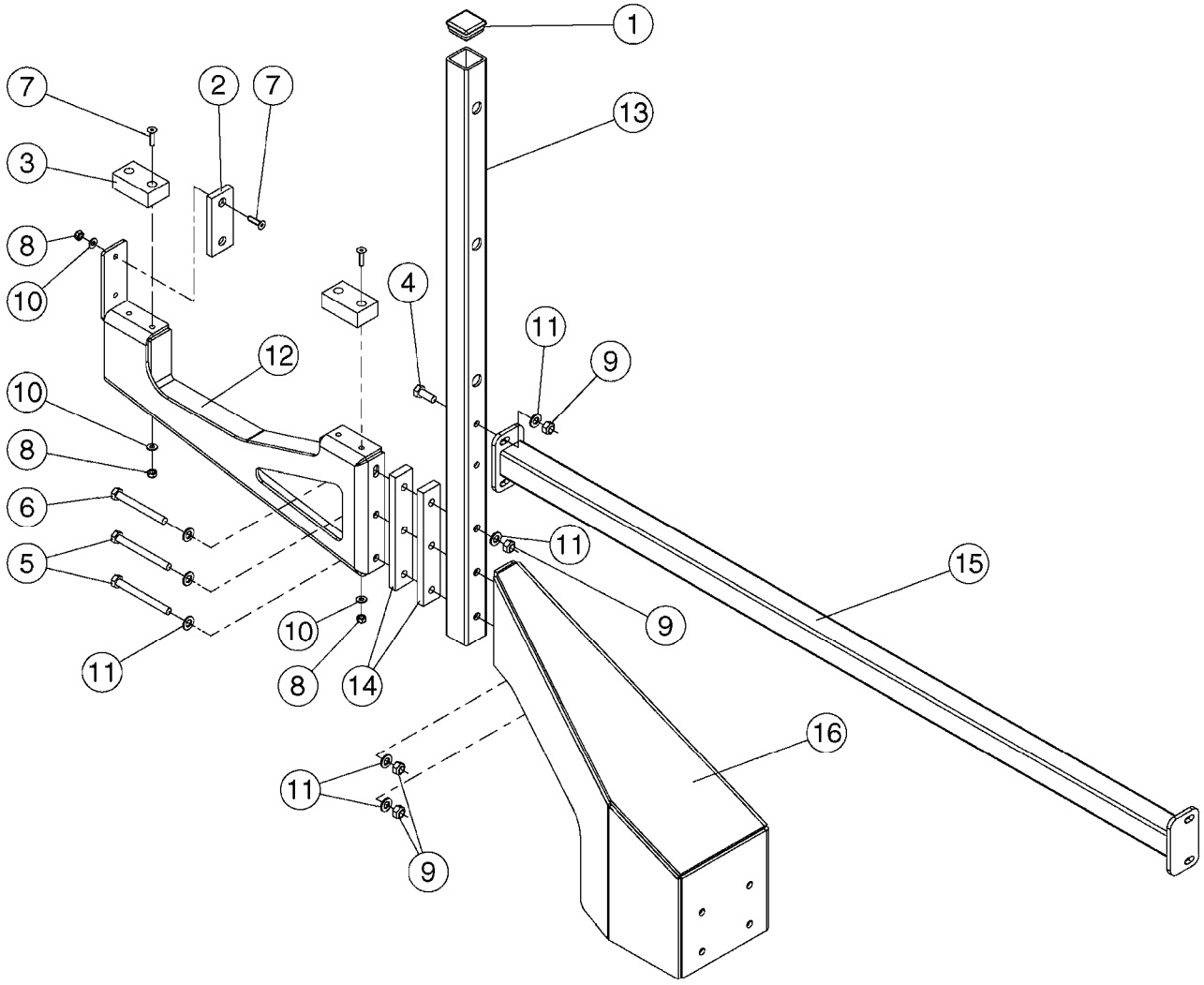

D0880

Agroparts: www.HARDI-INTERNATIONAL.com

TRANSPORT BKT HAZ ALPHA RH
D0880-HIN, 05:01:17

Date 12.08.2020 11:38

Pos.	parts-nº	order qty	description
1	334561	1	PLUG 50x50x2 F.SQ.TUBE
2	398074	1	SLIDE 80X30 L140 2 HOLES
3	398084	1	SLIDE 50X30 L85 2 HOLES
4	430286	1	BOLT HEX 8.8 DEL M12X30 FT
5	430824	1	BOLT HEX 8.8 DEL M12X120
6	430892	1	BOLT HEX 8.8 DEL M12X110
7	458032	1	BOLT M8X30 8.8 DIN7991D SS
8	460143	1	LOCK NUT M8 SST A2 DIN985
9	460703	1	NUT HEX M12X1.75 LOCK DIN985A2 SS
10	471126	1	WASHER, M8, Ø16/ 8.4X 1.6, SS
11	471127	1	WASHER, M12, Ø24/13X24X2.5 SS
12	618438	1	RIGHT REST CRADLE, 24-30 HAZ, ALPHA
13	15057003	1	BRACKET, TRANS, RH, TUBE, AL
14	16314001	1	SHIM 233X40X15
15	61025803	1	BRACKET, TRANS, CENTER, TUBE, AL
16	63049803	1	BRACKET, TRANS, RH, AL

HARDI	**Agroparts: www.HARDI-INTERNATIONAL.com**	
	ALPHA EVO LIFT ADAPTER 80-100' HAZ D0890-HIN, 07:02:17	Page 0 Date 12.08.2020 11:38

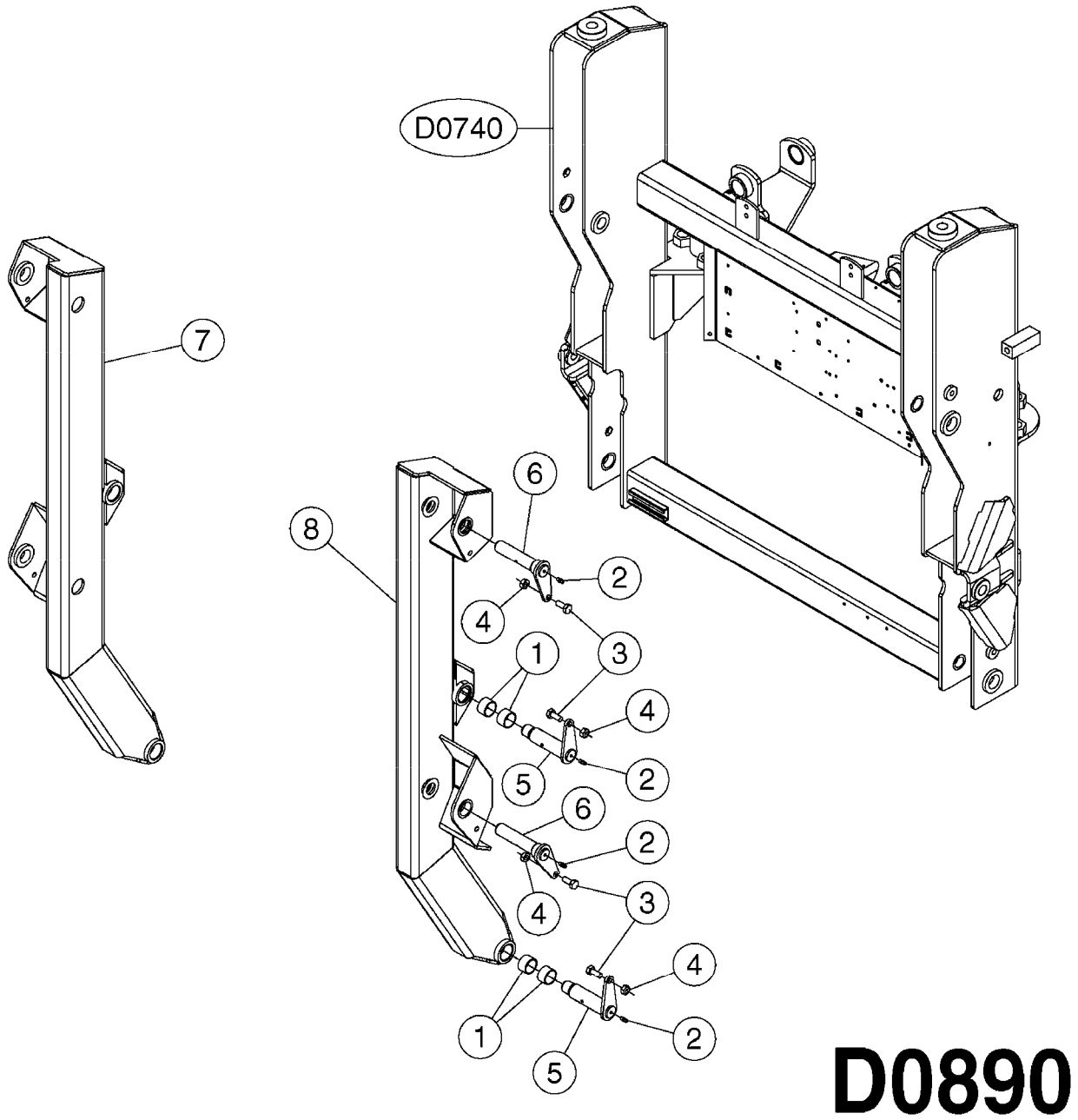

D0890

Agroparts: www.HARDI-INTERNATIONAL.com

ALPHA EVO LIFT ADAPTER
80-100' HAZ
D0890-HIN, 07:02:17

Date 12.08.2020 11:38

Pos.	parts-nº	order qty	description
1	210858	1	BUSHING 034/30 L=20
2	283699	1	GREASE NIPPLE M6X1
3	420604	1	BOLT HEX 8.8 DEL M10X25 FT DIN933
4	460423	1	NUT HEX M10X1.50 LOCK DIN985A2 SS
5	61056500	1	PIN Ø30/Ø25 L=122
6	61061500	1	PIN Ø30/25 L=122
7	63049503	1	ALPHA EVO LIFT ADAPTER RIGHT, RED
8	63049603	1	ALPHA EVO LIFT ADAPTER LEFT, RED

DTZ TRAPEZE CENTER
D0900-HIN, 05:06:19

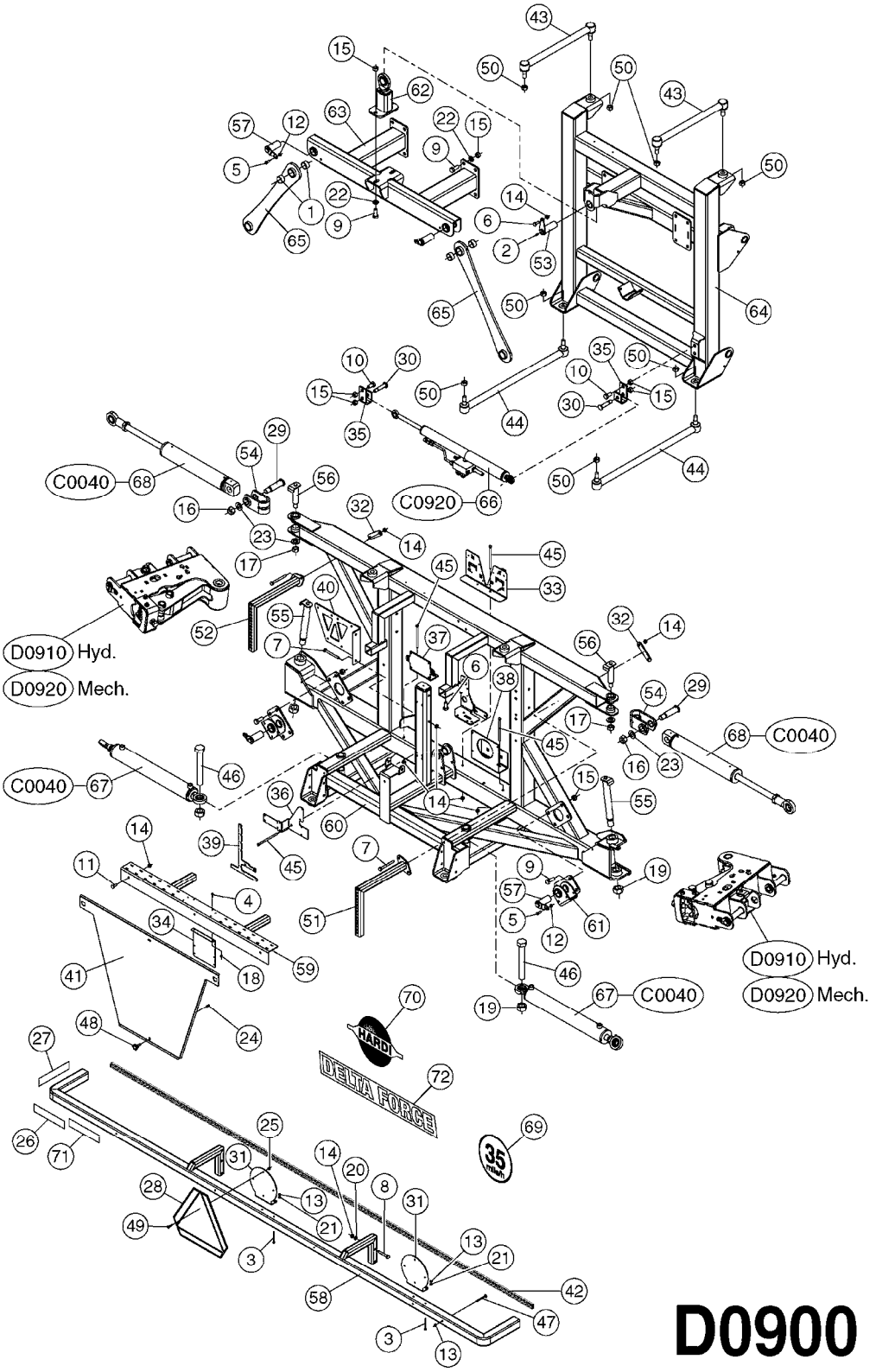

D0900

Agroparts: www.HARDI-INTERNATIONAL.com

DTZ TRAPEZE CENTER
D0900-HIN, 05:06:19

Date 12.08.2020 11:38

Pos.	parts-n°	order qty	description
1	210866	1	BUSHING D39/35 L=20
2	283699	1	GREASE NIPPLE M6X1
3	410384	1	BOLT HEX 8.8 DEL M6X65
4	410406	1	BOLT HEX 8.8 DEL M5X16 FT
5	420582	1	BOLT HEX 8.8 DEL M8X20 FT A2
6	420604	1	BOLT HEX 8.8 DEL M10X25 FT DIN933
7	421061	1	BOLT HEX 8.8 DEL M10X100 DIN931
8	421083	1	BOLT HEX 8.8 DEL M10X65
9	430581	1	BOLT HEX 8.8 DEL M16X40 FT
10	430684	1	BOLT HEX 8.8 DEL M16X30 FT
11	440737	1	BOLT CARRIAGE M10x25 SS
12	460143	1	LOCK NUT M8 SST A2 DIN985
13	460261	1	NUT HEX M6X1.00 LOCK DIN985 A2 SS
14	460423	1	NUT HEX M10X1.50 LOCK DIN985A2 SS
15	460585	1	LOCKING NUT M16 DIN985 A2 SS
16	460747	1	NUT HEX M24 LOCK
17	460806	1	NUT HEX M20X2.50 LOCK DIN985A2 SS
18	461217	1	NUT HEX M5 LOCK
19	461316	1	NUT HEX LOCK M30X3.5 DIN 985
20	471122	1	WASHER, M10, Ø20/10.5X 2.0, SS
21	471125	1	WASHER M6U 6.4X14X1.2,A2 SS
22	471128	1	WASHER, M16, Ø30/17.0X 3.0, SS
23	471130	1	WASHER, M24, Ø44/25.0X 4.0, SS
24	480811	1	BLIND FASTENER M6 STAINLESS
25	10497603	1	NUT HEX NC 1/4 NYLOCK Z
26	10533803	1	DECAL REFLECTIVE RED 50X230
27	10533903	1	DECAL REFLECTIVE AMBER 50X230
28	10601403	1	SMV SIGN POLYSTYRENE
29	14057100	1	PIN Ø30/M24 L=89 DELTA
30	14074700	1	PIN Ø16.8/M16(B) L=85
31	16170103	1	BRACKET, DECAL, SPEED LIMIT, PRESIDIO
32	16220803	1	PLATE, 1/4", FLAT, 30X120, 2 HOLE RED
33	16226203	1	PLATE, FOLDED, 220X310X1/8", RED
34	16339600	1	MOUNT PLATE F.JUNCTION BOX,TDZ
35	16448400	1	BRACKET F. LOCK CYL. DDZ CENTER
36	16452800	1	FLOW DIVIDER BRACKET PLATE
37	16479400	1	PLATE F. YAW BLOCK
38	16479600	1	PLATE F. JUNCTION BOX
39	16482600	1	PLATE PENDULUM WIRING
40	16482800	1	PLATE F. ACC. DDZ
41	16504600	1	SHIELD F. DDZ CENTER '16
42	19489600	1	ALUPROFILE 30X10 L=3.20 M
43	28160100	1	LINKARM M18 Ø36 L=500 DDZ
44	28160200	1	LINKARM M18 Ø36 L=745 DDZ
45	42126800	1	BOLT HEX 8.8 DEL M10X140
46	43100100	1	BOLT HEX 8.8 DEL M30X220 DIN931
47	44075100	1	BOLT, CARRIAGE, M6X70 DIN603 SS
48	45001500	1	SCREW THUMB PLASTIC HEAD M6x20
49	45002203	1	SCREW TPH MS 1/4-20X1 ZNCLR
50	46133000	1	NUT HEX LOCK M18 x 1.5 DIN 980 V
51	61027103	1	BRKT, HOSE RIGHT, DTZ, RED
52	61027303	1	BRKT, HOSE LEFT, DTZ, RED
53	61037600	1	PIN Ø34.8/L=94
54	61078300	1	SWIVEL PART F. TILT TDZ, RED
55	61099100	1	PIN Ø35/M30 L=242
56	61099200	1	PINBOLT Ø30/M20 L=114
57	61100200	1	PIN Ø34,8 L=80, DTZ
58	63050903	1	BUMPER, DELTA FORCE, RED
59	63100400	1	MOUNT BRACKET FOR EFC, TDZ
60	63204400	1	WIDE CENTERSECTION 3.5M DDZ PAINTED
61	63204600	1	TRAPEZ BOTTOM MOUNT DTZ PAINTED

Pos.	parts-nº	order qty	description
62	63204800	1	TRAPEZ SUPPORT ARM DTZ PAINTED
63	63205000	1	TRAPEZ TOP MOUNT DTZ PAINTED
64	63205200	1	LIFT FRAME F. TRAPEZ DDZ PAINTED
65	63205600	1	TRAPEZ ARM DTZ PAINTED
66	78126000	1	CYLINDER,DAMPNER,LOCKING
67	78132700	1	DOB.CYL.Ø70/30-436/ Ø30
68	78132800	1	DOB.CYL.Ø70/30-360/M30 SPEC.
69	97616003	1	DECAL- SPEED 35 MPH
69	97616103	1	DECAL- SPEED 25 MPH
69	97617103	1	DECAL - SPEED 30 MPH
70	97617003	1	DECAL - HARDI 3D LOGO F.TANK 335 X 210
71	97619903	1	DECAL FLUORESCENT ORANGE 50X230
72	97847100	1	LABEL "DELTA FORCE"

DTZ HYDRAULIC YAW
D0910-HIN, 17:05:17

Date 12.08.2020 11:38

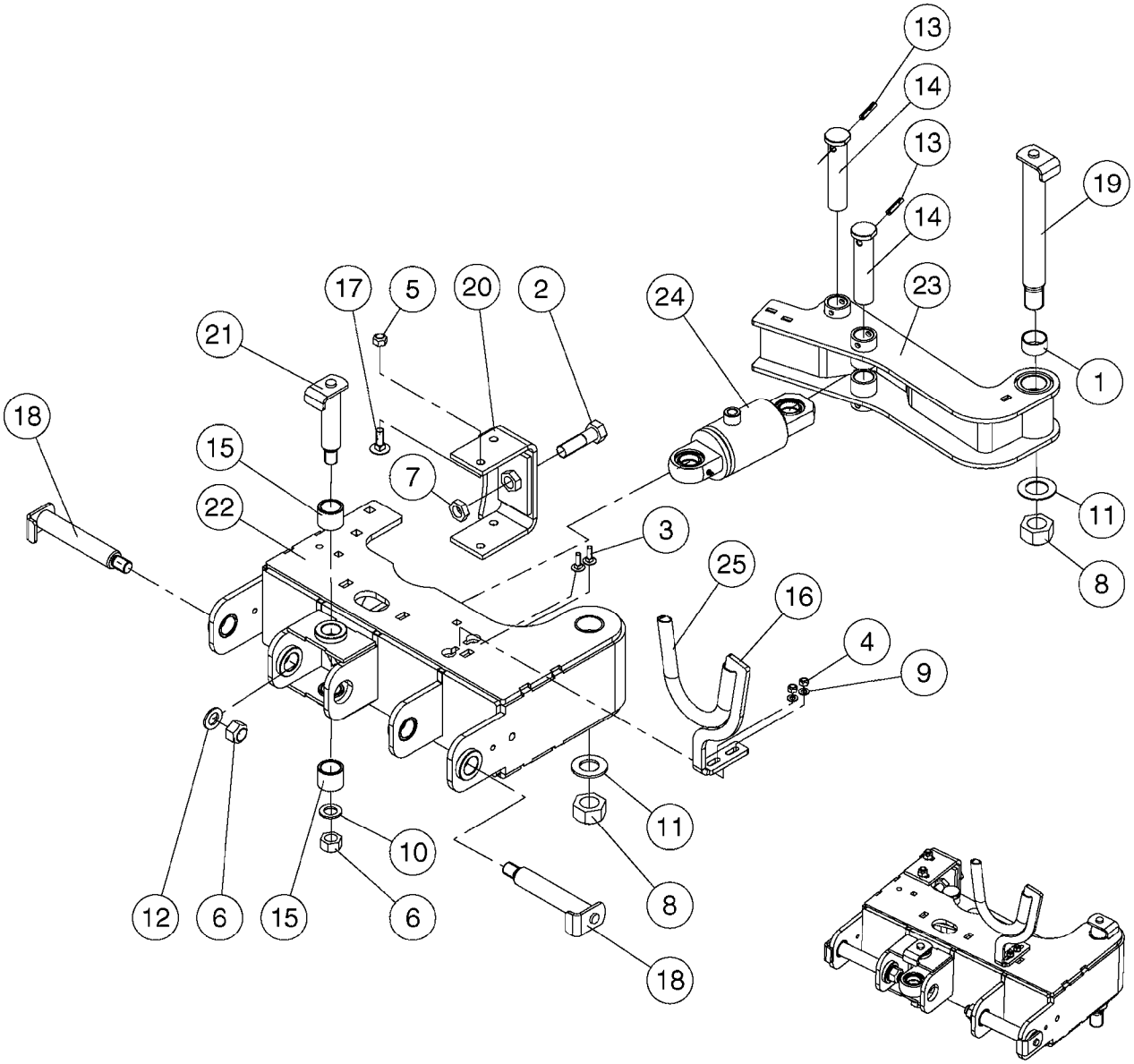

D0910

Agroparts: www.HARDI-INTERNATIONAL.com

DTZ HYDRAULIC YAW
D0910-HIN, 17:05:17

Date 12.08.2020 11:38

Pos.	parts-n°	order qty	description
1	210866	1	BUSHING D39/35 L=20
2	430920	1	BOLT HEX M20x80MM
3	440735	1	M8 X 30 COACH BOLT
4	460143	1	LOCK NUT M8 SST A2 DIN985
5	460703	1	NUT HEX M12X1.75 LOCK DIN985A2 SS
6	460806	1	NUT HEX M20X2.50 LOCK DIN985A2 SS
7	461228	1	NUT HEX M20
8	461316	1	NUT HEX LOCK M30X3.5 DIN 985
9	471126	1	WASHER, M8, Ø16/ 8.4X 1.6, SS
10	471129	1	WASHER, M20, Ø37/21.0X 3.0, SS
11	471131	1	WASHER, M30, Ø56/31.0X 4.0, SS
12	471180	1	LOCK WASHER NORDLOCK M20 ELZ
13	480735	1	TENSION PIN D 8X40 DIN 1481
14	14141200	1	BEARING BOLT Ø30 L=129
15	14141400	1	BUSH. Ø40/Ø30,5 L=33
16	16485000	1	HOSEBRACKET DTZ
17	45001300	1	CARRIAGE BOLT M12X35 DIN603 A2
18	61058000	1	PIN D30 L=158 M20
19	61069100	1	PIN D29.8 L=90/M24 DEL
20	61080500	1	LOCKPIECE PIVOT DTZ RED
21	61098300	1	PIN, Ø30/M20 L= 131
22	63123400	1	OUTER PART F.PIVOT DTZ RED
23	63123600	1	INNER PART F.PIVOT DTZ RED.
24	78133000	1	PLUNGECYL. Ø70-40 /2XØ30
25	92703203	1	HOSE R X3/4" X300PSI WP X0012"

HARDI	**Agroparts: www.HARDI-INTERNATIONAL.com**	
	DTZ MECHANICAL YAW D0920-HIN, 18:05:17	Page 0 Date 12.08.2020 11:38

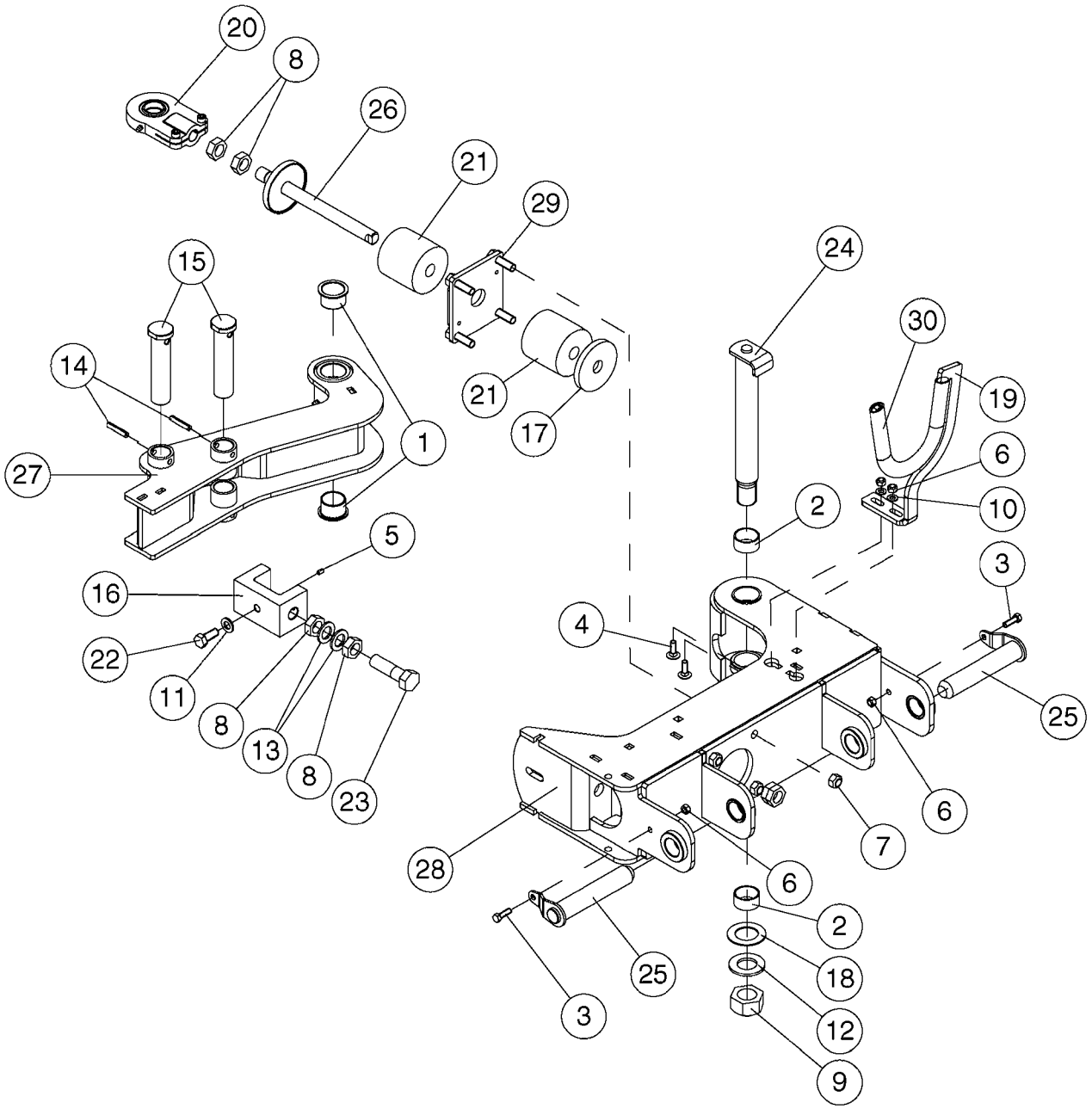

D0920

Agroparts: www.HARDI-INTERNATIONAL.com

DTZ MECHANICAL YAW
D0920-HIN, 18:05:17

Date 12.08.2020 11:38

Pos.	parts-nº	order qty	description
1	210811	1	SLIDE BEARING FLANGE D35/D39
2	210866	1	BUSHING D39/35 L=20
3	421046	1	BOLT HEX M8X25/25 A2 SS DIN933
4	440735	1	M8 X 30 COACH BOLT
5	450144	1	SCREW M6X10 8.8
6	460143	1	LOCK NUT M8 SST A2 DIN985
7	460703	1	NUT HEX M12X1.75 LOCK DIN985A2 SS
8	461251	1	NUT HEX M20 X 2.5 JAMB
9	461316	1	NUT HEX LOCK M30X3.5 DIN 985
10	471126	1	WASHER, M8, Ø16/ 8.4X 1.6, SS
11	471127	1	WASHER, M12, Ø24/13X24X2.5 SS
12	471131	1	WASHER, M30, Ø56/31.0X 4.0, SS
13	471180	1	LOCK WASHER NORDLOCK M20 ELZ
14	480735	1	TENSION PIN D 8X40 DIN 1481
15	14141200	1	BEARING BOLT Ø30 L=129
16	14146600	1	CONSOLE FOR RUBBER BUFFER
17	14150400	1	DOCK WASHER FOR RUBBER BUFFER
18	16448500	1	WASHER,2XØ60/Ø36, SS.
19	16485000	1	HOSEBRACKET DTZ
20	28168900	1	LINK EYE SURFACE DELTA
21	39146300	1	RUBBER BUFFER Ø80X21 L=80
22	43099200	1	BOLT HEX SS M12 X 30 DIN933 A4
23	43100700	1	BOLT HEX SS M20 X 90
24	61099100	1	PIN Ø35/M30 L=242
25	61100800	1	PIN Ø30 L=160
26	61104800	1	BOLT F. RUBBER BUFFER
27	63123600	1	INNER PART F.PIVOT DTZ RED.
28	63151300	1	OUTER TURNJOINT DDZ RED
29	63208000	1	RUBBER BUFFER MOUNT
30	92703203	1	HOSE R X3/4" X300PSI WP X0012"

	Agroparts: www.HARDI-INTERNATIONAL.com	
HARDI	DTZ 120'/132' BOOM 3 FOLD INNER D0930-HIN, 15:07:19	Page 0 Date 12.08.2020 11:38

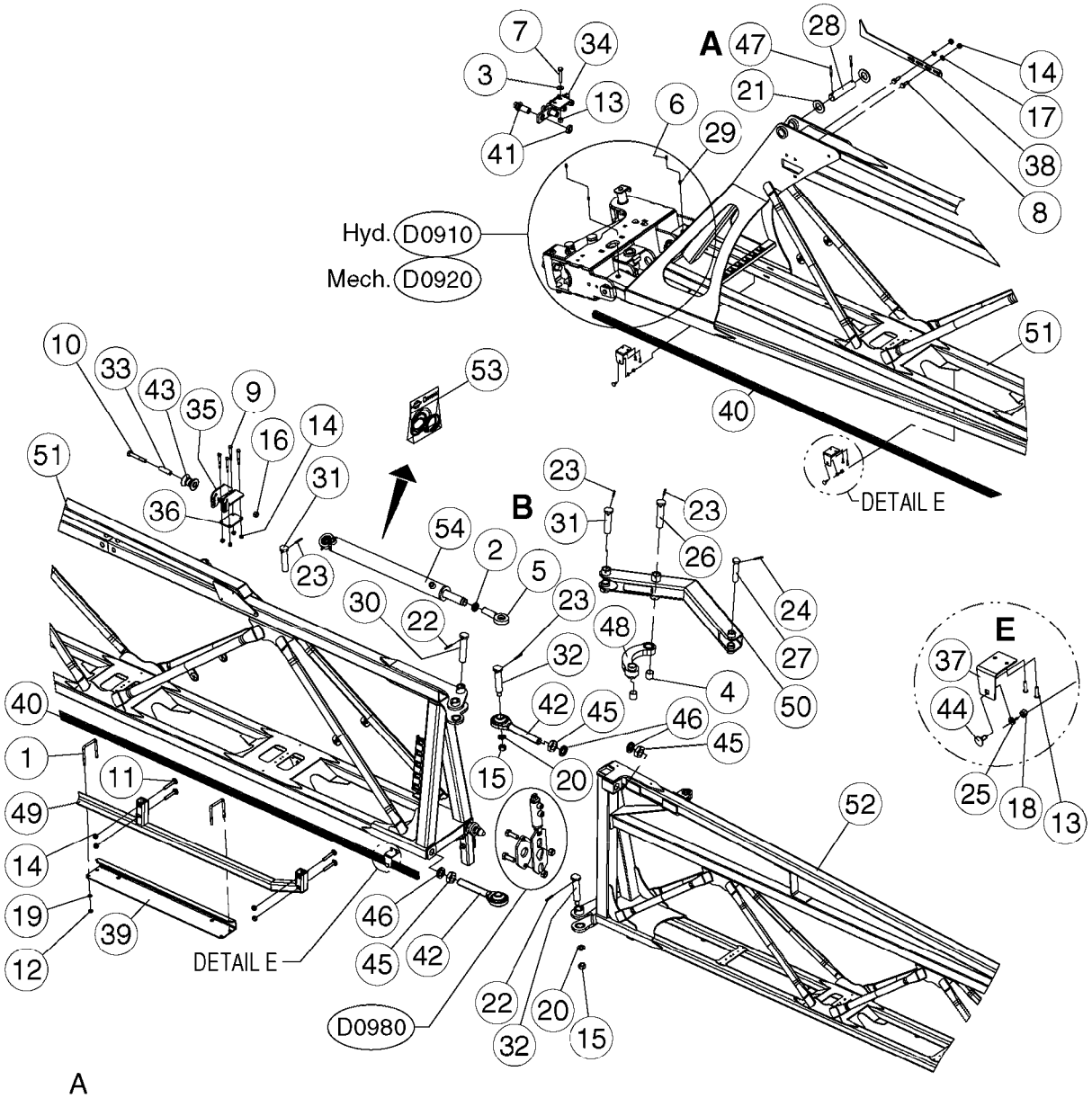

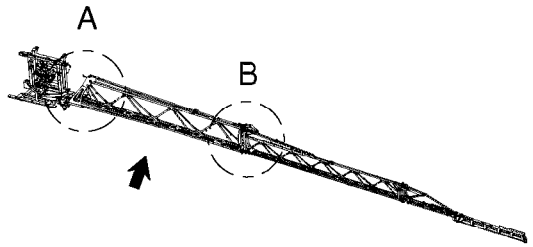

D0930

Agroparts: www.HARDI-INTERNATIONAL.com

DTZ 120'/132' BOOM 3 FOLD INNER
D0930-HIN, 15:07:19

Date 12.08.2020 11:38

Pos.	parts-nº	order qty	description
1	146843	1	BOLT U M8 F.60 x 60
2	147128	1	NUT M24X2 NV-32
3	163936	1	WASHER D15/D6.2X1
4	210835	1	BUSHING D28/25 L=25
5	210878	1	LINK HEAD M24 x 55 W/ GREASE NIP. DELTA
6	283699	1	GREASE NIPPLE M6X1
7	418014	1	BOLT HEX M6X35/18 SS A2 DIN931
8	421002	1	BOLT HEX 8.8 DEL M10X30 FT DIN933
9	421024	1	BOLT HEX 8.8 DEL M8X60
10	430846	1	BOLT HEX 8.8 DEL M12X80
11	440718	1	BOLT CRG M10 X 65 DEL
12	460143	1	LOCK NUT M8 SST A2 DIN985
13	460261	1	NUT HEX M6X1.00 LOCK DIN985 A2 SS
14	460423	1	NUT HEX M10X1.50 LOCK DIN985A2 SS
15	460585	1	LOCKING NUT M16 DIN985 A2 SS
16	460703	1	NUT HEX M12X1.75 LOCK DIN985A2 SS
17	471122	1	WASHER, M10, Ø20/10.5X 2.0, SS
18	471125	1	WASHER M6U 6.4X14X1.2,A2 SS
19	471126	1	WASHER, M8, Ø16/ 8.4X 1.6, SS
20	471128	1	WASHER, M16, Ø30/17.0X 3.0, SS
21	471131	1	WASHER, M30, Ø56/31.0X 4.0, SS
22	480717	1	PIN E 5X40 SST
23	480719	1	PIN D5 X 36 STAINLESS
24	480730	1	SPRING DOWEL PIN 5X30 SST
25	480806	1	RIVET, POP, Ø4.8X14/Ø9.5 SS
26	14059800	1	PIN Ø25 L=122/114
27	14060200	1	PIN Ø20.0 L=101/93
28	14096200	1	PIN Ø29,9/6 L=135
29	14137100	1	GREASE NIPPLE EXTENDER 10MM
30	14140600	1	PIN Ø25.4 L=131/123
31	14141000	1	PIN Ø25 L=111/103
32	14141100	1	PINBOLT Ø25.4 L=104/21 M16
33	15133700	1	BUSHING Ø16.0 X1.5 L=54
34	16230003	1	PLATE, FOLDED, 3/16", 120X71, RED
35	16255100	1	BOOM BRACKET
36	16255200	1	PLATE F. BOOM BRACKET RED DDZ
37	16406700	1	BRACKET, ALUPROFILE, 54MM LONG
38	16451500	1	TILT INDICATOR DDZ
39	16451700	1	INNER WING TRANSPORT RAIL
40	19487600	1	ALUPROFILE 30X10 L=6.35 M
41	23241500	1	HYD.FIT. BULKHEAD 9/16"
42	28159800	1	EYEBOLT Ø25.4 M27X3
43	39141200	1	PLASTIC TRUSS D30/16.5 L=52
44	44077100	1	BOLT, CARRIAGE, M6X16 DIN603 SS
45	46133100	1	JAM NUT M27 DIN 439 B DEL
46	47118500	1	NORDLOCK WASHER M27 LIM ZNK
47	48082100	1	SPRING PIN Ø6x50 DIN1481 RST
48	61080300	1	1. FOLDING BANANA DDZ PAINTED
49	61095700	1	CENTERFRAME TRANSPORTRAIL PAINTED
50	63122300	1	FOLD ARM 1 DDZ RED
51	63169900	1	INNERWING 6.43M RIGHT DDZ '16 RED
51	63170500	1	INNERWING 6.43M LEFT DDZ '16 RED
52	63171500	1	1.OUTERWING 5.93M RIGHT DDZ RED
52	63171700	1	1.OUTERWING 5.93M LEFT DDZ RED
53	75587000	1	SEAL KIT FOR 78133300
54	78133300	1	DOB.CYL.Ø50/30 500 END DAMPING

	Agroparts: www.HARDI-INTERNATIONAL.com	
HARDI	DTZ 120'/132' BOOM 3 FOLD OUTER D0940-HIN, 05:05:20	Page 0 Date 12.08.2020 11:38

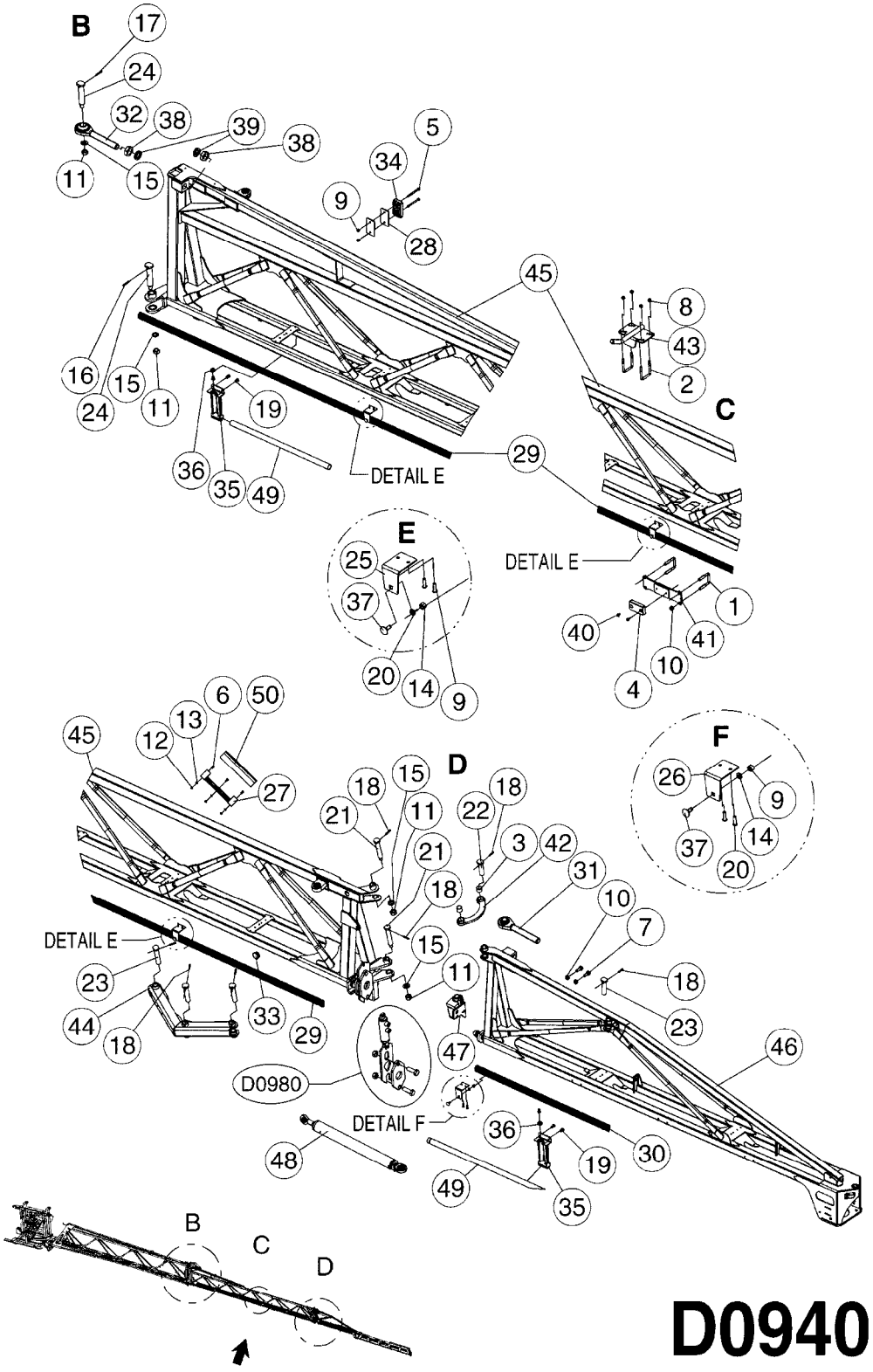

D0940

Agroparts: www.HARDI-INTERNATIONAL.com

DTZ 120'/132' BOOM 3 FOLD
OUTER
D0940-HIN, 05:05:20

Date 12.08.2020 11:38

Pos.	parts-nº	order qty	description
1	143161	1	BOLT U M10 40X40
2	147516	1	U-BOLT M8-50x50
3	210859	1	BUSH Ø23X20 L20
4	334603	1	RUBBER STOP 86X48X15
5	410605	1	BOLT HEX 8.8 DEL M6X80
6	411030	1	BOLT HEX M5X10
7	420604	1	BOLT HEX 8.8 DEL M10X25 FT DIN933
8	460143	1	LOCK NUT M8 SST A2 DIN985
9	460261	1	NUT HEX M6X1.00 LOCK DIN985 A2 SS
10	460423	1	NUT HEX M10X1.50 LOCK DIN985A2 SS
11	460585	1	LOCKING NUT M16 DIN985 A2 SS
12	461217	1	NUT HEX M5 LOCK
13	471123	1	WASHER, M5, Ø10/ 5.3X 1.0, SS
14	471125	1	WASHER M6U 6.4X14X1.2,A2 SS
15	471128	1	WASHER, M16, Ø30/17.0X 3.0, SS
16	480717	1	PIN E 5X40 SST
17	480719	1	PIN D5 X 36 STAINLESS
18	480730	1	SPRING DOWEL PIN 5X30 SST
19	480804	1	RIVET Ø4.8x14.5
20	480806	1	RIVET, POP, Ø4.8X14/Ø9.5 SS
21	14058400	1	PINBOLT Ø19.3 L=108/100 M12
22	14059700	1	PINBOLT Ø20.0 L=83/75
23	14059800	1	PIN Ø25 L=122/114
24	14141100	1	PINBOLT Ø25.4 L=104/21 M16
25	16406700	1	BRACKET, ALUPROFILE, 54MM LONG
26	16407200	1	BRACKET, ALUPROFILE, SHORT
27	16453000	1	BRACKET F. RUBBER SHIELD
28	16453100	1	PLATE F.RUBBER PAD
29	19487800	1	ALUPROFILE 30X10 L=5.90 M
30	19488300	1	ALUPROFILE 30X10 L=1.90 M
31	28096700	1	EYEBOLT W/SWIVEL Ø19.3 M27 RH
32	28159800	1	EYEBOLT Ø25.4 M27X3
33	28163900	1	PLUG F.NOZZLE TUBE Ø25-27/32
34	33510100	1	WEAR PAD 86X48X15
35	33523600	1	PROTECTION TUBE HOLDER
36	33524400	1	BUTTON Ø22/Ø18 H9.5
37	44077100	1	BOLT, CARRIAGE, M6X16 DIN603 SS
38	46133100	1	JAM NUT M27 DIN 439 B DEL
39	47118500	1	NORDLOCK WASHER M27 LIM ZNK
40	48082000	1	RIVET Ø4.8X12.7/ALU/ST
41	61071800	1	TRANSPORT BRACKET TDZ
42	61080700	1	2. FOLDING BANANA DDZ PAINTED
43	61095500	1	BOOM BRACKET PAINTED
44	63122500	1	FOLD ARM 2 DDZ RED
45	63171500	1	1.OUTERWING 5.93M RIGHT DDZ RED
45	63171700	1	1.OUTERWING 5.93M LEFT DDZ RED
46	63173100	1	2. OUTERWING RIGHT 2.2M DDZ PAINTED
46	63173300	1	2. OUTERWING LEFT 2.2M DDZ PAINTED
47	63177400	1	BRACKET W. BALLJOINT DDZ R.
47	63177500	1	BRACKET W. BALLJOINT DDZ L.
48	78133100	1	DOB.CYL.Ø40/25-375/M20-Ø20
49	92510600	1	TUBE, ROUND, Ø25.0X1.5, ALUMINUM
50	92712403	1	HOSE R X1" X300PSI WP X0012"

DTZ 90' BOOM 2 FOLD INNER
D0950-HIN, 15:07:19

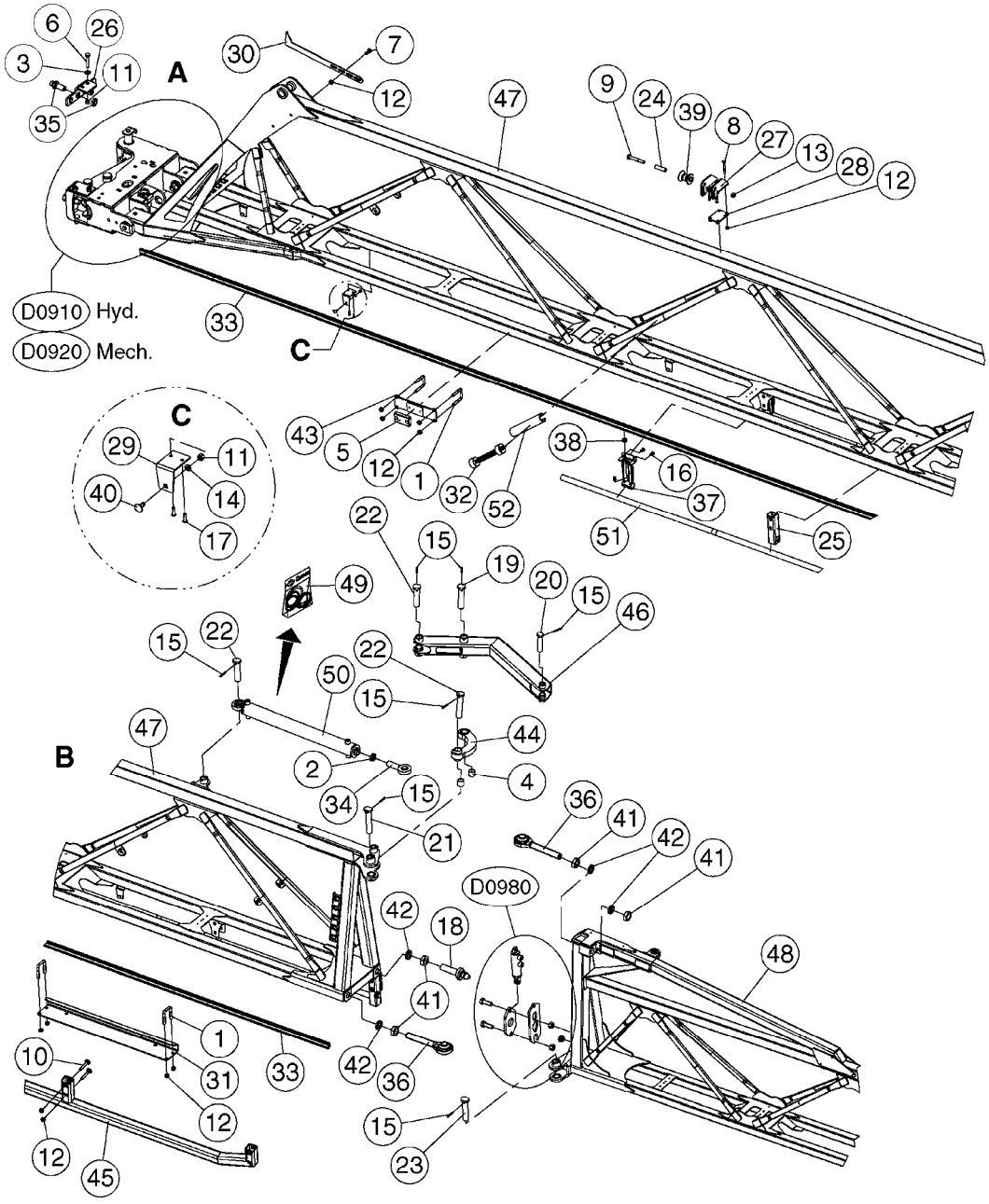

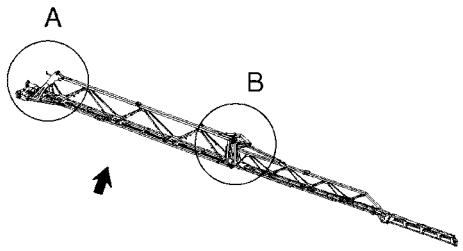

D0950

Agroparts: www.HARDI-INTERNATIONAL.com

DTZ 90' BOOM 2 FOLD INNER
D0950-HIN, 15:07:19

Date 12.08.2020 11:38

Pos.	parts-nº	order qty	description
1	143161	1	BOLT U M10 40X40
2	147128	1	NUT M24X2 NV-32
3	163936	1	WASHER D15/D6.2X1
4	210835	1	BUSHING D28/25 L=25
5	334603	1	RUBBER STOP 86X48X15
6	418014	1	BOLT HEX M6X35/18 SS A2 DIN931
7	420604	1	BOLT HEX 8.8 DEL M10X25 FT DIN933
8	421024	1	BOLT HEX 8.8 DEL M8X60
9	430846	1	BOLT HEX 8.8 DEL M12X80
10	440718	1	BOLT CRG M10 X 65 DEL
11	460261	1	NUT HEX M6X1.00 LOCK DIN985 A2 SS
12	460423	1	NUT HEX M10X1.50 LOCK DIN985A2 SS
13	460703	1	NUT HEX M12X1.75 LOCK DIN985A2 SS
14	471125	1	WASHER M6U 6.4X14X1.2,A2 SS
15	480717	1	PIN E 5X40 SST
16	480804	1	RIVET Ø4.8x14.5
17	480806	1	RIVET, POP, Ø4.8X14/Ø9.5 SS
18	14058800	1	PIN Ø27.0 NV46 M27 L= 158
19	14059800	1	PIN Ø25 L=122/114
20	14060200	1	PIN Ø20.0 L=101/93
21	14140600	1	PIN Ø25.4 L=131/123
22	14141000	1	PIN Ø25 L=111/103
23	14141100	1	PINBOLT Ø25.4 L=104/21 M16
24	15133700	1	BUSHING Ø16.0 X1.5 L=54
25	15222600	1	BRACKET FOR NOZZLE PROTECTION
26	16230003	1	PLATE, FOLDED, 3/16", 120X71, RED
27	16255100	1	BOOM BRACKET
28	16255200	1	PLATE F. BOOM BRACKET RED DDZ
29	16406700	1	BRACKET, ALUPROFILE, 54MM LONG
30	16451500	1	TILT INDICATOR DDZ
31	16451700	1	INNER WING TRANSPORT RAIL
32	16453000	1	BRACKET F. RUBBER SHIELD
33	19487600	1	ALUPROFILE 30X10 L=6.35 M
33	19487700	1	ALUPROFIL 30X10 L=5850
34	21091800	1	LINK HEAD Ø25,M24X55 W/ GREASE NIP. DELTA
35	23241500	1	HYD.FIT. BULKHEAD 9/16"
36	28159800	1	EYEBOLT Ø25.4 M27X3
37	33523600	1	PROTECTION TUBE HOLDER
38	33524400	1	BUTTON Ø22/Ø18 H9.5
39	39141200	1	PLASTIC TRUSS D30/16.5 L=52
40	44077100	1	BOLT, CARRIAGE, M6X16 DIN603 SS
41	46133100	1	JAM NUT M27 DIN 439 B DEL
42	47118500	1	NORDLOCK WASHER M27 LIM ZNK
43	61071800	1	TRANSPORT BRACKET TDZ
44	61080300	1	1. FOLDING BANANA DDZ PAINTED
45	61095700	1	CENTERFRAME TRANSPORTRAIL PAINTED
46	63122300	1	FOLD ARM 1 DDZ RED
47	63208700	1	INNERWING 5.93M R. DDZ RED
47	63209700	1	INNERWING 5.93M L. DDZ RED
48	63211400	1	OUTERWING R. DDZ 3.75M PAINTED
48	63211600	1	OUTERWING L. DDZ 3.75M PAINTED
49	75587000	1	SEAL KIT FOR 78133300
50	78133300	1	DOB.CYL.Ø50/30 500 END DAMPING
51	92510600	1	TUBE, ROUND, Ø25.0X1.5, ALUMINUM
52	92712403	1	HOSE R X1" X300PSI WP X0012"

DTZ 90' BOOM 2 FOLD OUTER
D0960-HIN, 30:06:17

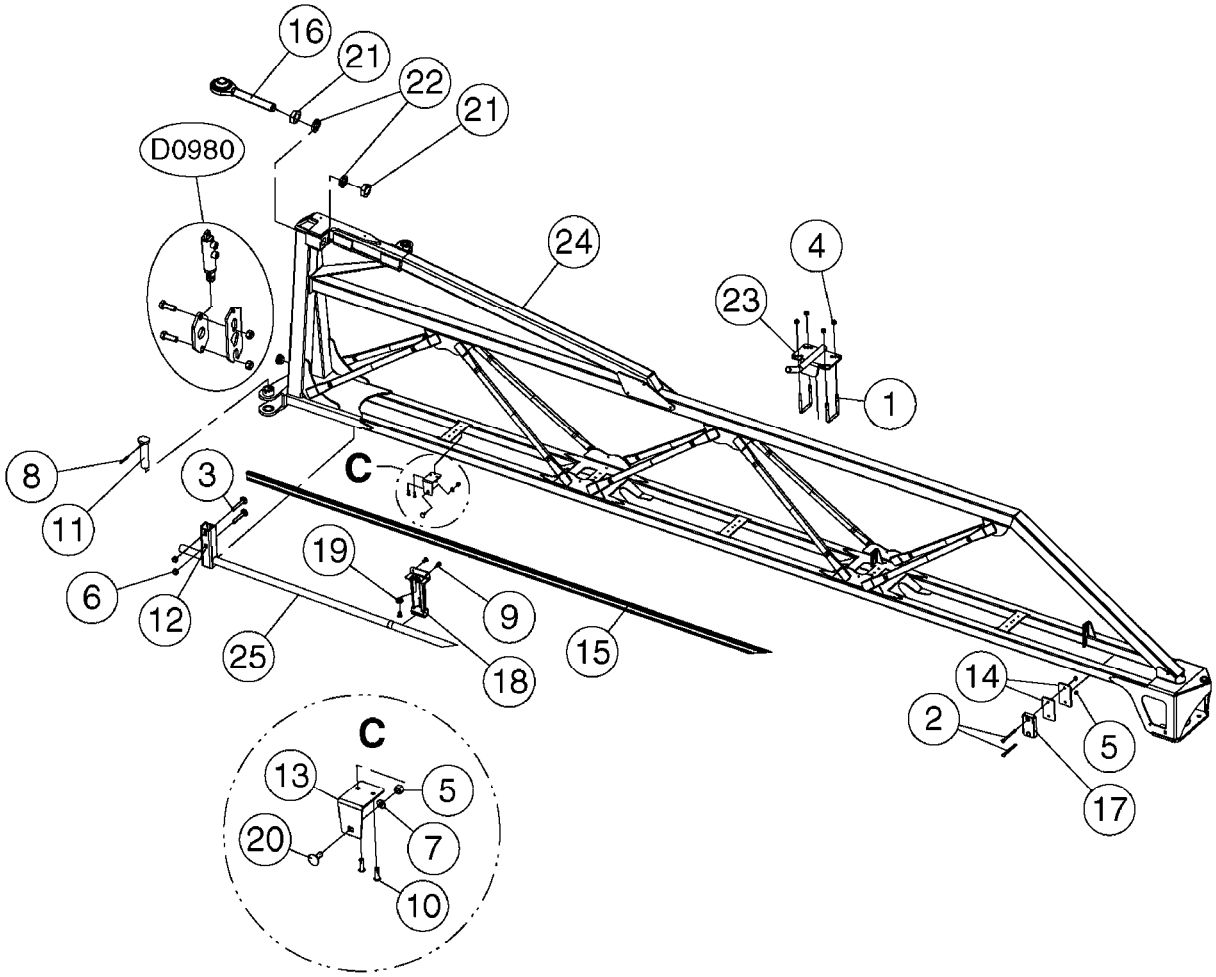

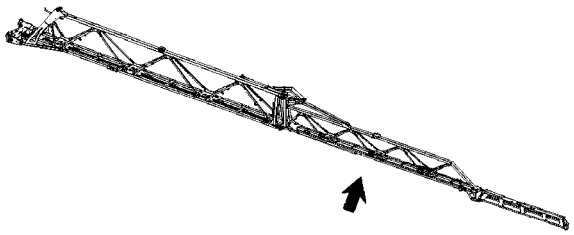

D0960

Agroparts: www.HARDI-INTERNATIONAL.com

DTZ 90' BOOM 2 FOLD OUTER
D0960-HIN, 30:06:17

Date 12.08.2020 11:38

Pos.	parts-nº	order qty	description
1	147516	1	U-BOLT M8-50x50
2	410642	1	BOLT HEX 8.8 DEL M6X75
3	440718	1	BOLT CRG M10 X 65 DEL
4	460143	1	LOCK NUT M8 SST A2 DIN985
5	460261	1	NUT HEX M6X1.00 LOCK DIN985 A2 SS
6	460423	1	NUT HEX M10X1.50 LOCK DIN985A2 SS
7	471125	1	WASHER M6U 6.4X14X1.2,A2 SS
8	480717	1	PIN E 5X40 SST
9	480804	1	RIVET Ø4.8x14.5
10	480806	1	RIVET, POP, Ø4.8X14/Ø9.5 SS
11	14141100	1	PINBOLT Ø25.4 L=104/21 M16
12	15222600	1	BRACKET FOR NOZZLE PROTECTION
13	16406700	1	BRACKET, ALUPROFILE, 54MM LONG
14	16453100	1	PLATE F.RUBBER PAD
15	19488000	1	ALUPROFIL 30X10 L=4500
15	19488200	1	ALUPROFIL 30X10 L=3650
16	28159800	1	EYEBOLT Ø25.4 M27X3
17	33510100	1	WEAR PAD 86X48X15
18	33523600	1	PROTECTION TUBE HOLDER
19	33524400	1	BUTTON Ø22/Ø18 H9.5
20	44077100	1	BOLT, CARRIAGE, M6X16 DIN603 SS
21	46133100	1	JAM NUT M27 DIN 439 B DEL
22	47118500	1	NORDLOCK WASHER M27 LIM ZNK
23	61095500	1	BOOM BRACKET PAINTED
24	63211400	1	OUTERWING R. DDZ 3.75M PAINTED
24	63211600	1	OUTERWING L. DDZ 3.75M PAINTED
25	92510600	1	TUBE, ROUND, Ø25.0X1.5, ALUMINUM

DTZ BREAKAWAYS
D0970-HIN, 30:04:20

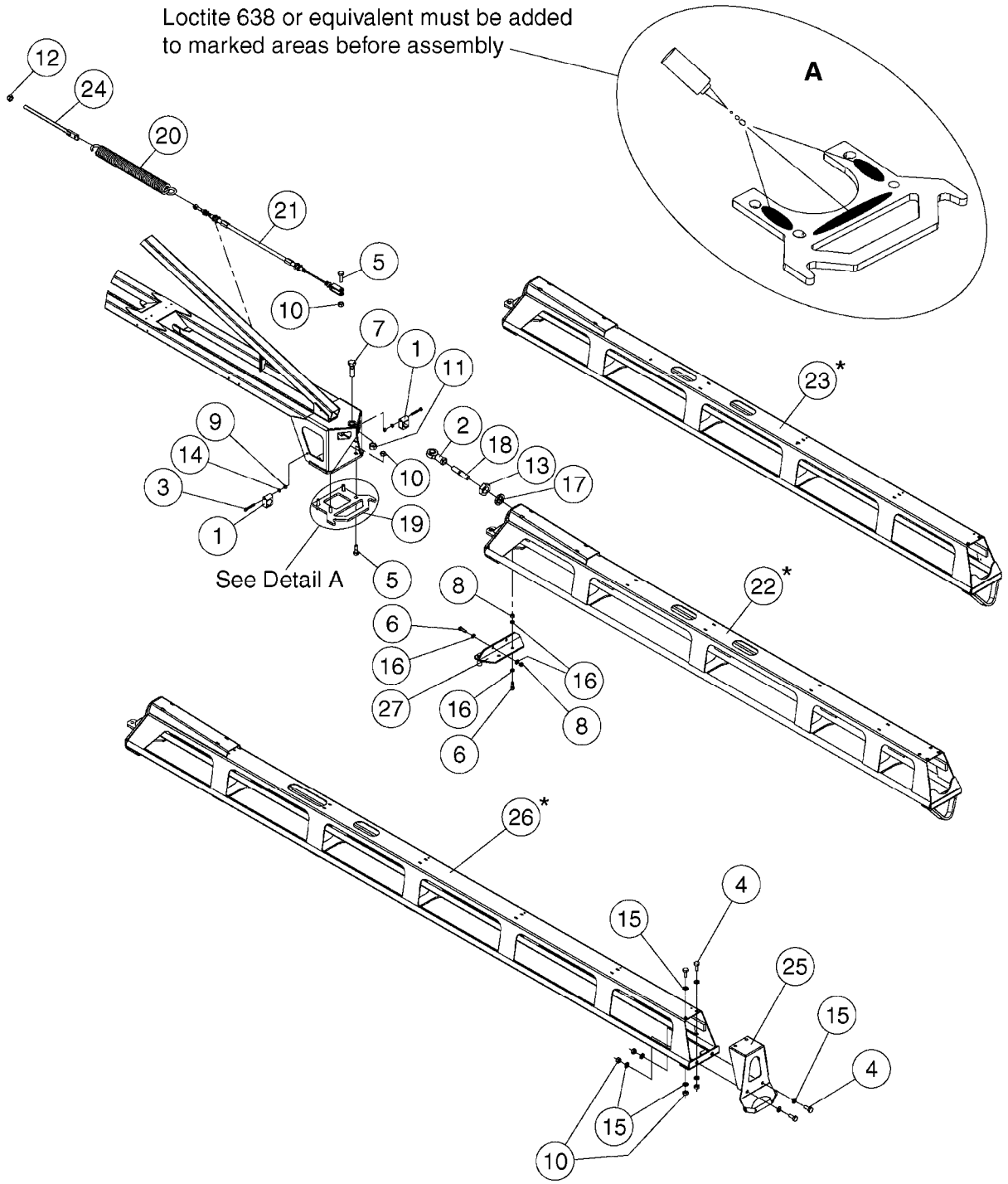

*CONFIRM NUMBER OF NOZZLES

D0970

Agroparts: www.HARDI-INTERNATIONAL.com

DTZ BREAKAWAYS
D0970-HIN, 30:04:20

Date 12.08.2020 11:38

Pos.	parts-nº	order qty	description
1	285511	1	HOSE HOLDER Ø25 SINGLE
2	288420	1	LINK EYE M16X2 LEFT+GREASE NIPPLE M6
3	410583	1	BOLT HEX 8.8 DEL M6X40
4	420604	1	BOLT HEX 8.8 DEL M10X25 FT DIN933
5	421002	1	BOLT HEX 8.8 DEL M10X30 FT DIN933
6	421046	1	BOLT HEX M8X25/25 A2 SS DIN933
7	430765	1	BOLT HEX 8.8 DEL M16X55
8	460143	1	LOCK NUT M8 SST A2 DIN985
9	460261	1	NUT HEX M6X1.00 LOCK DIN985 A2 SS
10	460423	1	NUT HEX M10X1.50 LOCK DIN985A2 SS
11	460585	1	LOCKING NUT M16 DIN985 A2 SS
12	460703	1	NUT HEX M12X1.75 LOCK DIN985A2 SS
13	461198	1	NUT HEX M16X2 JAMB
14	470536	1	WASHER D12.0/6.4X1.6
15	471122	1	WASHER, M10, Ø20/10.5X 2.0, SS
16	471126	1	WASHER, M8, Ø16/ 8.4X 1.6, SS
17	471168	1	PAIR OF WASHERS NL16 17X25,4x3,4
18	14150700	1	TURNBUCKLE M16
19	16453600	1	BOTTOM PLATE TIP 2. OUTER 3 FOLD BOOMS
19	16488400	1	BOTTOM PLATE TIP OUTER 2 FOLD BOOMS
20	22098100	1	PL. SPRING Ø42/7.5 L=405 PAINTED
21	28004701	1	BOOM BREAKAWAY CABLE, L743,5
22	28128800	1	BREAKAWAY, ALU, DTZ, 4 NOZ , RIGHT
22	28128900	1	BREAKAWAY, ALU, DTZ, 4 NOZ , LEFT
23	28160000	1	DDZ 5 NOZZLE BREAK AWAY ALU, RIGHT
23	28164900	1	DDZ 5 NOZZLE BREAK AWAY ALU, LEFT
24	61101900	1	SET SCREW F. BREAKAWAY
25	61112900	1	TIP F. ALU BREAKAWAY PAINTED
26	63064403	1	DTZ BREAKAWAY 6 NOZ, ALU, RH, MOD
26	63064503	1	DTZ BREAKAWAY 6 NOZ, ALU, LH, MOD
27	63215600	1	BREAKAWAY BRACKET

DTZ HYD. BOOM LOCK
D0980-HIN, 30:05:17

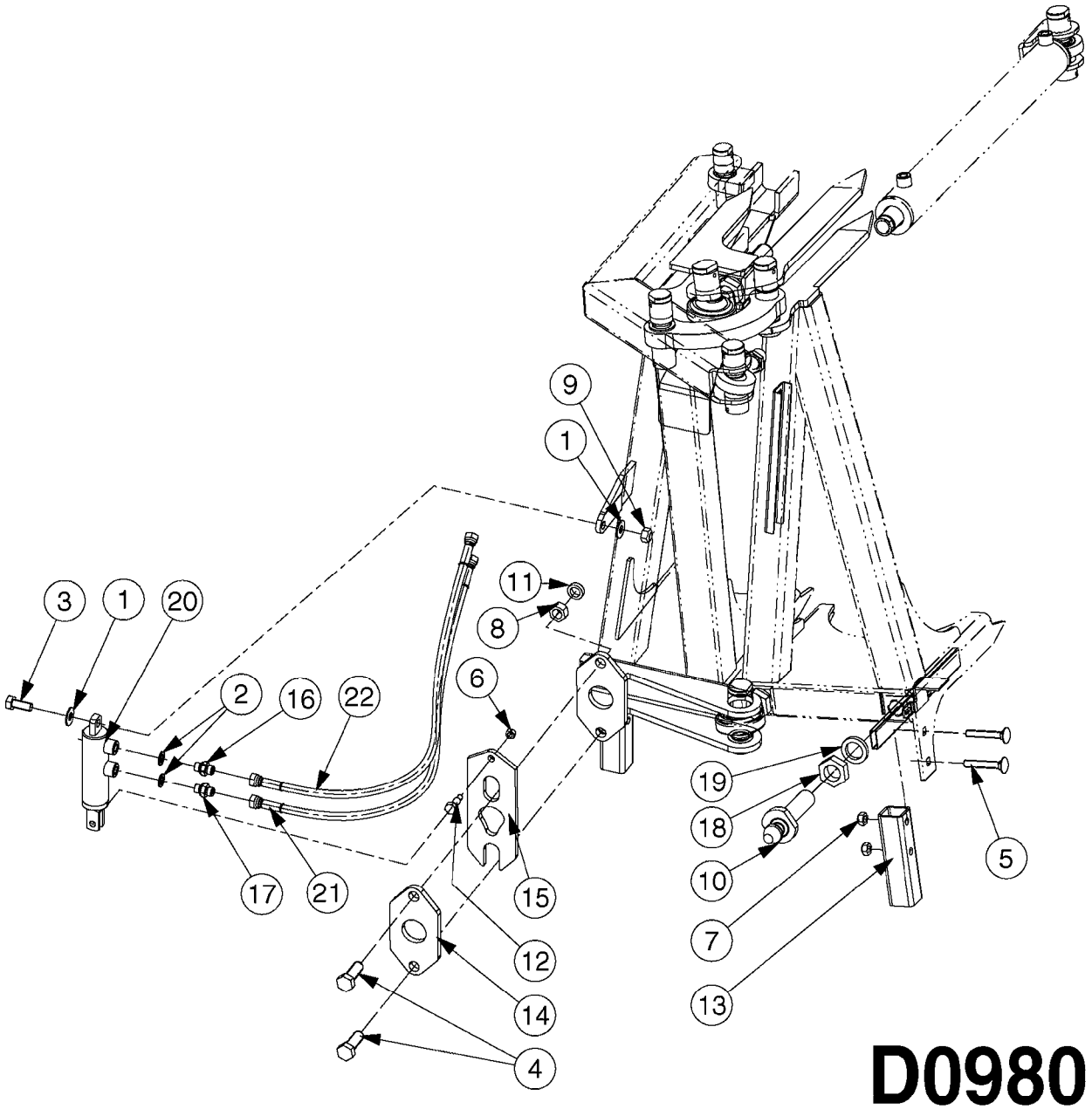

D0980

Agroparts: www.HARDI-INTERNATIONAL.com

DTZ HYD. BOOM LOCK
D0980-HIN, 30:05:17

Date 12.08.2020 11:38

Pos.	parts-n°	order qty	description
1	165557	1	WASHER D28.0/D12.2X2.0 SS
2	241404	1	DOWTY SEAL 1/4"
3	430404	1	BOLT HEX 8.8 DEL M12X50
4	430507	1	BOLT HEX 8.8 DEL M16X45 FT
5	440718	1	BOLT CRG M10 X 65 DEL
6	460143	1	LOCK NUT M8 SST A2 DIN985
7	460423	1	NUT HEX M10X1.50 LOCK DIN985A2 SS
8	460585	1	LOCKING NUT M16 DIN985 A2 SS
9	460703	1	NUT HEX M12X1.75 LOCK DIN985A2 SS
10	14058800	1	PIN Ø27.0 NV46 M27 L= 158
11	14058900	1	BUSHING Ø25/17 L=9
12	14120000	1	PIN Ø10.0 L= 20.5 M8
13	15207600	1	BRACKET 40X40X4.0/L= 155
14	16445000	1	PLATE F. DDZ LOCK
15	16463700	1	PLATE 6.0X 211 X 70
16	23234100	1	HEX NIPPLE 1/4"-9/16" - 1.2mm
17	23234500	1	HEX NIPPLE 1/4" - 9/16"
18	46133100	1	JAM NUT M27 DIN 439 B DEL
19	47118500	1	NORDLOCK WASHER M27 LIM ZNK
20	78127800	1	HYDRAULIC CYLINDER 25-40
21	78509900	1	HY.HO.1/4"L= 1500 STR-STR
22	78521400	1	HY.HO.1/4"L= 6350 STR-STR

HARDI	**Agroparts: www.HARDI-INTERNATIONAL.com**	
	TRANSPORT BRACKET DTZ D0990-HIN, 05:07:17	Page 0 Date 12.08.2020 11:38

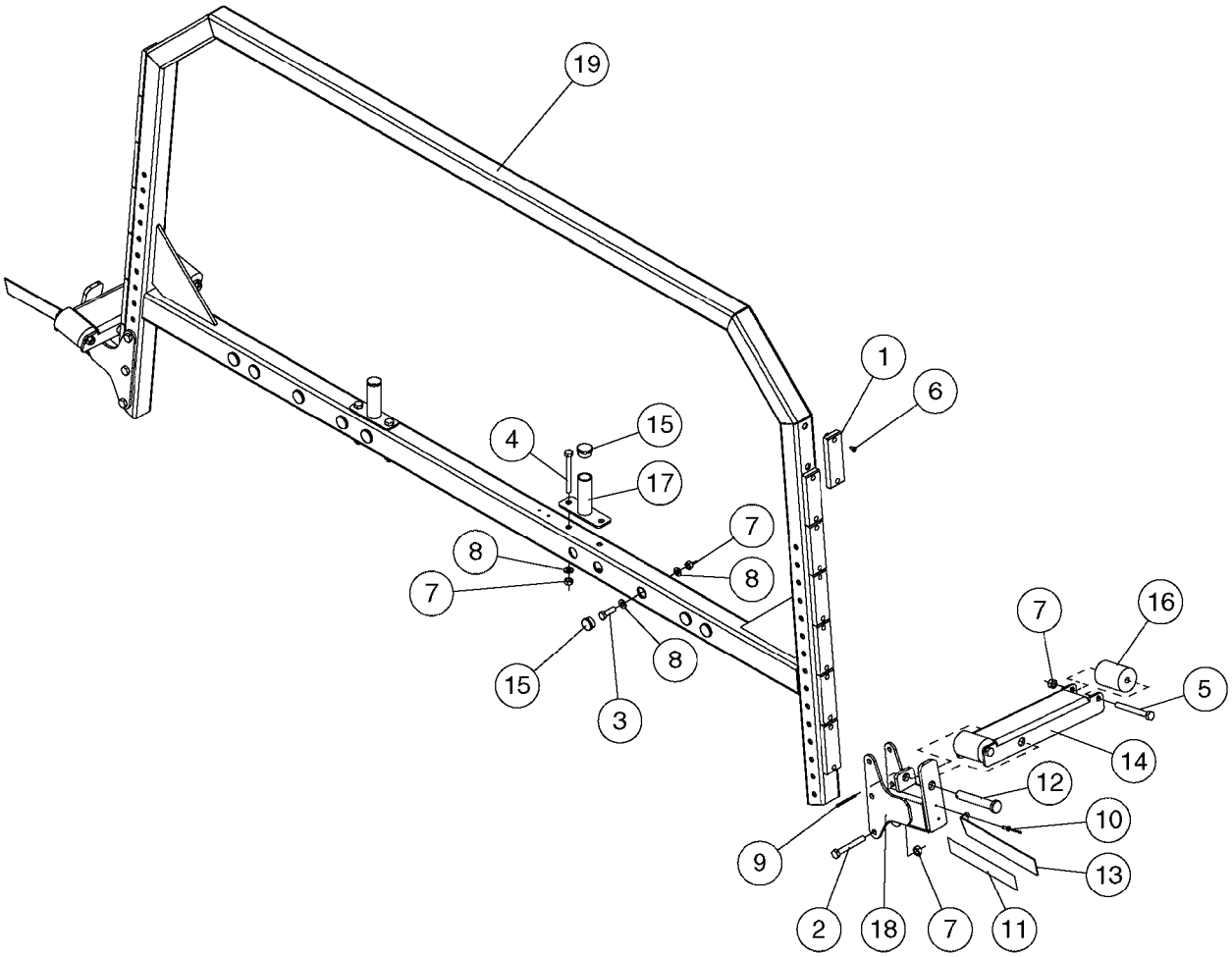

D0990

Agroparts: www.HARDI-INTERNATIONAL.com

TRANSPORT BRACKET DTZ
D0990-HIN, 05:07:17

Date 12.08.2020 11:38

Pos.	parts-nº	order qty	description
1	334135	1	SLIDE SHOE 140X45X15
2	430485	1	BOLT HEX 8.8 DEL M12X90
3	430721	1	BOLT HEX 8.8 DEL M12X40 FT
4	430824	1	BOLT HEX 8.8 DEL M12X120
5	430892	1	BOLT HEX 8.8 DEL M12X110
6	440708	1	SCREW M5.5X16 SELF TAPPING SS
7	460703	1	NUT HEX M12X1.75 LOCK DIN985A2 SS
8	471127	1	WASHER, M12, Ø24/13X24X2.5 SS
9	480384	1	PIN COTTER 3/16 x 1-1/2"
10	480808	1	RIVET Ø4.8x25.5/Ø9.5
11	10533903	1	DECAL REFLECTIVE AMBER 50X230
12	14105000	1	PIN Ø30/20/6 L=131 DELTA
13	16240403	1	REFLECTOR BRACKET, DTZ, L, RED
13	16240603	1	REFLECTOR BRACKET, DTZ, R, RED
14	16345600	1	BRACKET F.TDZ TRANSPORT ROLLER
15	28046900	1	COVER PLUG 1" BLACK
16	39001801	1	ROLLER FOR TRANSPORT, POM
17	61020203	1	HANDLE F. TRANSPORT
18	63056303	1	TRANSPORT REST, DTZ/TDZ, 2017, RED
19	63056703	1	TRANSPORT BRACKET, TDZ/DTZ, 2017, RED

SYNTAL

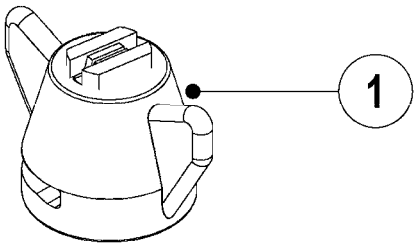

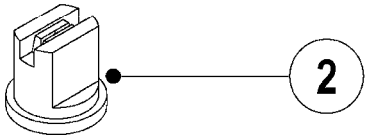

CERAMIC

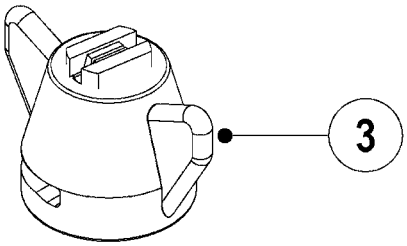

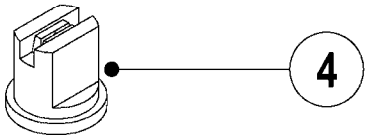

D1000

Agroparts: www.HARDI-INTERNATIONAL.com

BOOM-NOZZLES 110° FLAT FAN ISO
D1000-HIN, 01:01:16

Date 12.08.2020 11:38

Pos.	parts-n°	order qty	description
1	371764	1	NOZZLE ISO CT F-01-110 ORANGE
1	371765	1	NOZZLE ISO CT F-015-110 GREEN
1	371766	1	NOZZLE ISO CT F-02-110 YELLOW
1	371767	1	NOZZLE ISO CT F-03-110 BLUE
1	371768	1	NOZZLE ISO CT F-04-110 RED
1	371769	1	NOZZLE ISO CT F-05-110 BROWN
1	371770	1	NOZZLE ISO CT F-06-110 GREY
1	371771	1	NOZZLE ISO CT F-08-110 WHITE
1	371950	1	NOZZLE ISO CT F-025-110 LILAC
1	371964	1	NOZZLE ISO CT F-075-110 PINK
1	371970	1	NOZZLE ISO CT F-10-110 LT BLUE
2	371706	1	NOZZLE ISO F-01-110 ORANGE
2	371707	1	NOZZLE ISO F-015-110 GREEN
2	371708	1	NOZZLE ISO F-02-110 YELLOW
2	371709	1	NOZZLE ISO F-03-110 BLUE
2	371710	1	NOZZLE ISO F-04-110 RED
2	371711	1	NOZZLE ISO F-05-110 BROWN
2	371712	1	NOZZLE ISO F-06-110 GREY
2	371713	1	NOZZLE ISO F-08-110 WHITE
2	371946	1	NOZZLE ISO F-025-110 LILAC
2	371963	1	NOZZLE ISO F-075-110 PINK
2	371966	1	NOZZLE ISO F-10-110 LT BLUE
3	371772	1	NOZZLE ISO CT F-015-110C GREEN
3	371773	1	NOZZLE ISO CT F-02-110C YELLOW
3	371774	1	NOZZLE ISO CT F-03-110C BLUE
3	371775	1	NOZZLE ISO CT F-04-110C RED
3	371776	1	NOZZLE ISO CT F-05-110C BROWN
3	371777	1	NOZZLE ISO CT F-06-110C GREY
4	371738	1	NOZZLE ISO F-015-110C GREEN
4	371739	1	NOZZLE ISO F-02-110C YELLOW
4	371740	1	NOZZLE ISO F-03-110C BLUE
4	371741	1	NOZZLE ISO F-04-110C RED
4	371742	1	NOZZLE ISO F-05-110C BROWN
4	371743	1	NOZZLE ISO F-06-110C GREY

SYNTAL

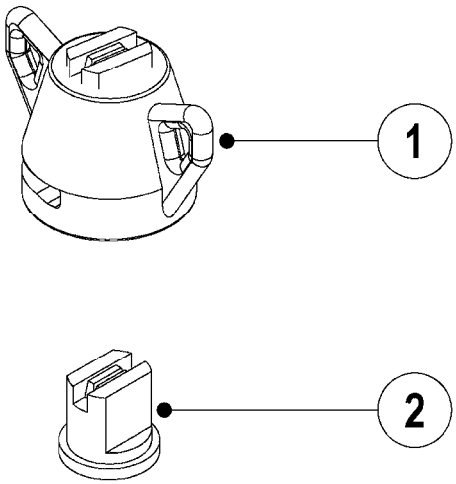

CERAMIC

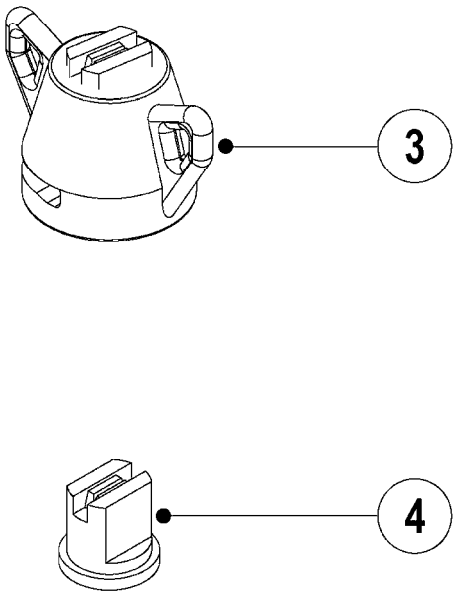

D1010

Agroparts: www.HARDI-INTERNATIONAL.com

BOOM-NOZZLES 110° LOWDRIFT ISO
D1010-HIN, 01:01:16

Date 12.08.2020 11:38

Pos.	parts-n°	order qty	description
1	371837	1	NOZZLE ISO CT LD-01-110 ORANGE
1	371838	1	NOZZLE ISO CT LD-015-110 GREEN
1	371839	1	NOZZLE ISO CT LD-02-110 YELLOW
1	371840	1	NOZZLE ISO CT LD-03-110 BLUE
1	371841	1	NOZZLE ISO CT LD-04-110 RED
1	371894	1	NOZZLE ISO CT LD-05-110 BROWN
1	371958	1	NOZZLE ISO CT LD-025-110 LILAC
2	371817	1	NOZZLE ISO LD-01-110 ORANGE
2	371818	1	NOZZLE ISO LD-015-110 GREEN
2	371819	1	NOZZLE ISO LD-02-110 YELLOW
2	371820	1	NOZZLE ISO LD-03-110 BLUE
2	371821	1	NOZZLE ISO LD-04-110 RED
2	371893	1	NOZZLE ISO LD-05-110 BROWN
2	371957	1	NOZZLE ISO LD-025-110 LILAC
3	371842	1	NOZZLE ISO CT LD-01-110C ORANG
3	371843	1	NOZZLE ISO CT LD-015-110C GRN
3	371844	1	NOZZLE ISO CT LD-02-110C YELLO
3	371845	1	NOZZLE ISO CT LD-03-110C BLUE
3	371846	1	NOZZLE ISO CT LD-04-110C RED
3	371897	1	NOZZLE ISO CT LD-05-110C BROWN
4	371822	1	NOZZLE ISO LD-01-110C ORANGE
4	371823	1	NOZZLE ISO LD-015-110C GREEN
4	371824	1	NOZZLE ISO LD-02-110C YELLOW
4	371825	1	NOZZLE ISO LD-03-110C BLUE
4	371826	1	NOZZLE ISO LD-04-110C RED
4	371896	1	NOZZLE ISO LD-05-110C BROWN

BOOM-NOZZLES 80° FLAT FAN ISO
D1020-HIN, 01:01:16

SYNTAL

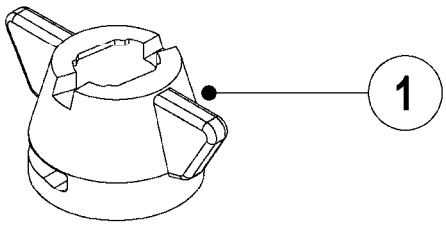

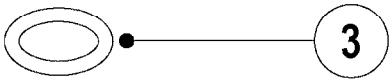

D1020

Agroparts: www.HARDI-INTERNATIONAL.com

BOOM-NOZZLES 80° FLAT FAN ISO
D1020-HIN, 01:01:16

Date 12.08.2020 11:38

Pos.	parts-n°	order qty	description
1	334083	1	SNAP-FIT NOZZLE HOLDER SS BLCK
2	371931	1	SYNTAL ISO F-01-80 TIP ORNG
2	371932	1	SYNTAL ISO F-015-80 TIP GREEN
2	371933	1	SYNTAL ISO F-02-80 TIP YELLOW
2	371934	1	SYNTAL ISO F-03-80 TIP BLUE
3	10423503	1	O-RING 9.12x3.53 NITRIL

BOOM-NOZZLE CAPS AND FILTERS
D1030-HIN, 28:11:17

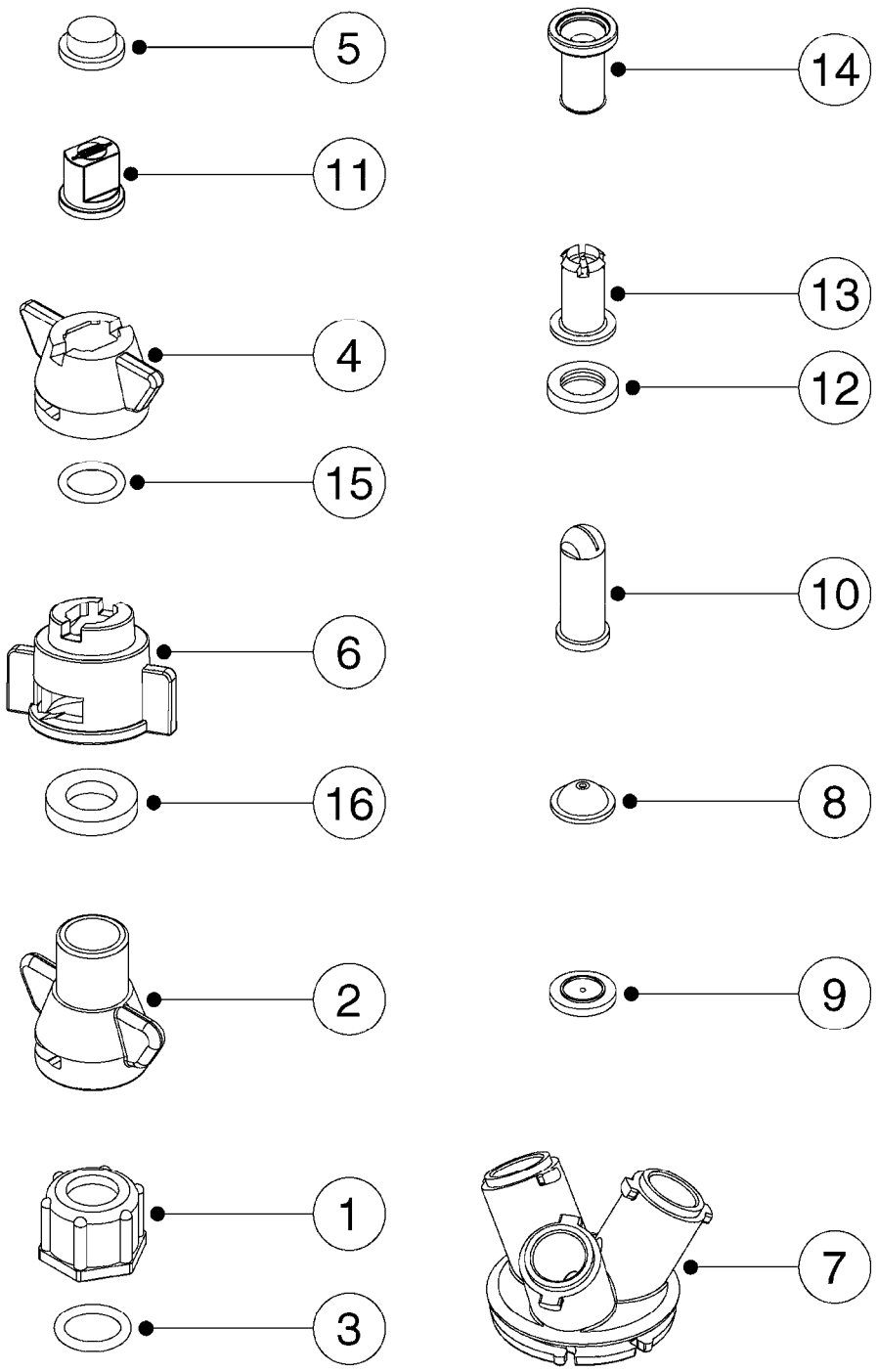

D1030

BOOM-NOZZLE CAPS AND FILTERS
D1030-HIN, 28:11:17

Date 12.08.2020 11:38

Pos.	parts-nº	order qty	description
1	320187	1	FITT.DK CAP 3/8" BSP BLACK
1	321517	1	FITT.DK CAP 3/8" BSP WHITE
			ALWAYS USE WITH ISO AND INJET NOZZLES
1	321797	1	FITT.DK CAP 3/8' BSP BLUE
1	321801	1	FITT.DK CAP 3/8' BSP GREEN
1	321812	1	FITT.DK CAP 3/8' BSP RED
1	321823	1	FITT.DK CAP 3/8' BSP ORANGE
1	321834	1	FITT.DK CAP 3/8' BSP YELLOW
2	322068	1	SNAP-FIT ADAPTER THREAD. HARDI
3	330013	1	O-RING 2.5 X 10 PUR
4	334083	1	SNAP-FIT NOZZLE HOLDER SS BLCK
5	334102	1	BLANK F.NOZZLE
6	334862	1	NOZZLE CAP TJBLACK F.ISO/INJET
7	334926	1	SNAP-FIT TURN PLATE F TRIPLET
8	370016	1	NOZZLE CONE JET 1553-08
8	370027	1	NOZZLE CONE JET 1553-10
8	370031	1	NOZZLE CONE JET 1553-12
8	370042	1	NOZZLE CONE JET 1553-14
8	370053	1	NOZZLE CONE JET 1553-16
8	370064	1	NOZZLE CONE JET 1553-18
8	370075	1	NOZZLE CONE JET 1553-20
8	370086	1	NOZZLE CONE JET 1553-22
8	370097	1	NOZZLE CONE JET 1553-24
8	370101	1	NOZZLE CONE JET 1553-30
8	370112	1	NOZZLE CONE JET 1553-35
8	370123	1	NOZZLE CONE JET 1553-40
9	370134	1	NOZZLE SWIRL 1554-GREY
9	370145	1	NOZZLE SWIRL 1554-BLACK
9	370156	1	NOZZLE SWIRL 1554-BLUE
9	370167	1	NOZZLE SWIRL 1554-1.3 WHITE
10	371551	1	NOZZ LRG DROP FLAT SPRAY SINGL
11	372140	1	HARDI ISO BLIND CAP
12	390639	1	O-RING F.NOZZLE FILTER
13	614366	1	FILTER 50 MESH F.NOZZLE BLUE
13	614367	1	FILTER 80 MESH F.NOZZLE RED
13	614368	1	FILTER 100 MESH F.NOZZLE YEL.
14	725042	1	SCREEN 80 MESH W.GASKET, RED
14	725043	1	SCREEN 50 MESH W.GASKET,BLUE
14	725044	1	SCREEN 100 MESH W.GASKET,YELLO
15	10423503	1	O-RING 9.12x3.53 NITRIL
16	24022901	1	GASKET D10X19 EP 3.2

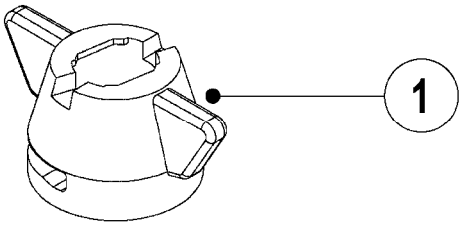

INJET Nozzle SYNTAL

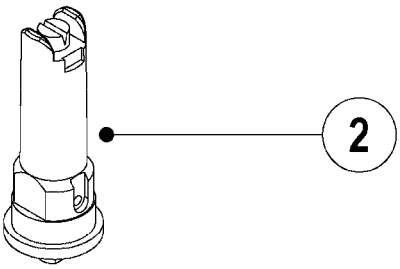

B-JET Nozzle SYNTAL

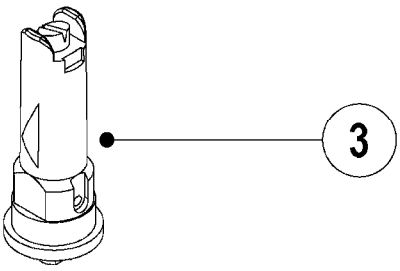

D1040

Agroparts: www.HARDI-INTERNATIONAL.com

BOOM-NOZZLES INJET
D1040-HIN, 01:01:16

Date 12.08.2020 11:38

Pos.	parts-nº	order qty	description
1	334083	1	SNAP-FIT NOZZLE HOLDER SS BLCK
2	371872	1	NOZZLE INJET 015 GREEN SINGLE
2	371873	1	NOZZLE INJET 02 YELLOW SINGLE
2	371874	1	NOZZLE INJET 025 LILAC SINGLE
2	371875	1	NOZZLE INJET 03 BLUE SINGLE
2	371876	1	NOZZLE INJET 04 RED SINGLE
2	371926	1	NOZZLE INJET 01 ORANGE SINGLE
2	371927	1	NOZZLE INJET 05 BROWN SINGLE
2	371928	1	NOZZLE INJET 06 GREY SINGLE
2	371929	1	NOZZLE INJET 08 WHITE SINGLE
3	371870	1	NOZZLE B-JET 03 BLUE
3	371871	1	NOZZLE B-JET 04 RED
3	371877	1	NOZZLE B-JET 025 LILAC
3	371930	1	NOZZLE B-JET 02 YELLOW

BOOM-NOZZLES TEEJET
D1045-HIN, 04:05:17

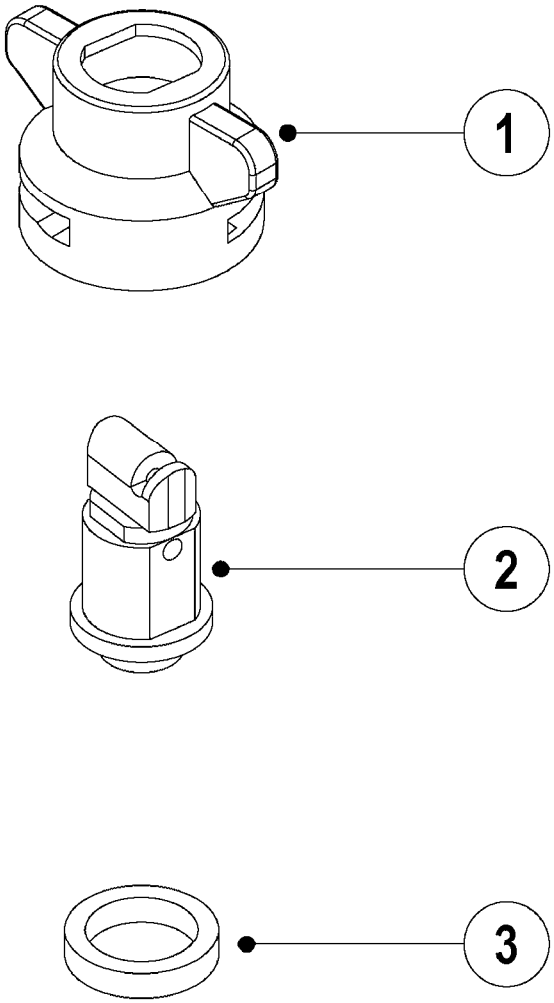

D1045

Agroparts: www.HARDI-INTERNATIONAL.com

BOOM-NOZZLES TEEJET
D1045-HIN, 04:05:17

Date 12.08.2020 11:38

Pos.	parts-nº	order qty	description
1	33000003	1	SNAP-FIT CAP/GASKET, TEEJET 21398H-1-CELR INCLUDES GASKET 24003903
2	37002403	1	NOZZLE TTI11003-VP BLUE
2	37002503	1	NOZZLE TTI11004-VP RED
2	37002603	1	NOZZLE TTI11005-VP BROWN
2	37002703	1	NOZZLE TTI11006-VP GREY
3	24003903	1	GASKET FOR 21398H CAP, TEEJET

BOOM-NOZZLES MINIDRIFT
D1050-HIN, 01:01:16

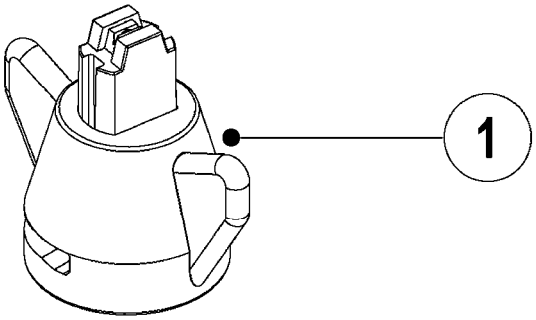

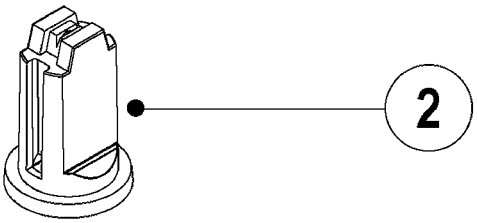

D1050

Agroparts: www.HARDI-INTERNATIONAL.com

BOOM-NOZZLES MINIDRIFT
D1050-HIN, 01:01:16

Date 12.08.2020 11:38

Pos.	parts-nº	order qty	description
1	372121	1	NOZZLE ISO CT MD-015-110 GREEN
1	372122	1	NOZZLE ISO CT MD-02-110 YELLOW
1	372123	1	NOZZLE ISO CT MD-025-110 LILAC
1	372124	1	NOZZLE ISO CT MD-03-110 BLUE
1	372125	1	NOZZLE ISO CT MD-04-110 RED
1	372126	1	NOZZLE ISO CT MD-05-110 BROWN
2	372111	1	NOZZLE ISO MD-015-110 GREEN
2	372112	1	NOZZLE ISO MD-02-110 YELLOW
2	372113	1	NOZZLE ISO MD-025-110 LILAC
2	372114	1	NOZZLE ISO MD-03-110 BLUE
2	372115	1	NOZZLE ISO MD-04-110 RED
2	372116	1	NOZZLE ISO MD-05-110 BROWN

BOOM-NOZZLES QUINTASTREAM
D1060-HIN, 01:01:16

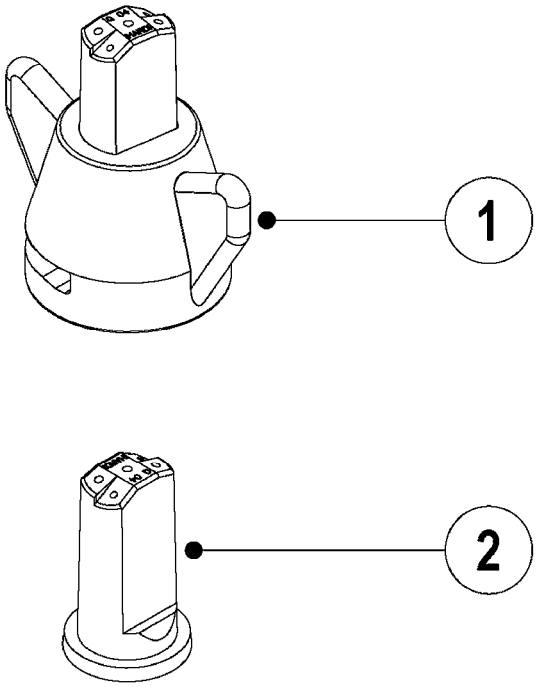

D1060

Agroparts: www.HARDI-INTERNATIONAL.com

BOOM-NOZZLES QUINTASTREAM
D1060-HIN, 01:01:16

Date 12.08.2020 11:38

Pos.	parts-nº	order qty	description
1	372011	1	NOZZLE ISO QS-015-5H GREEN
1	372012	1	NOZZLE ISO QS-02-5H YELLOW
1	372013	1	NOZZLE ISO QS-03-5H BLUE
1	372014	1	NOZZLE ISO QS-04-5H RED
1	372015	1	NOZZLE ISO QS-05-5H BROWN
1	372016	1	NOZZLE ISO QS-06-5H GREY
1	372017	1	NOZZLE ISO QS-08-5H WHITE
1	372018	1	NOZZLE ISO QS-10-5H LT. BLUE
1	372019	1	NOZZLE ISO QS-15-5H LT. GREEN
2	372002	1	ISO QNTSTRM 015 S-GREEN
2	372003	1	ISO QNTSTRM 02 S-YELLOW
2	372004	1	ISO QNTSTRM 03 S-BLUE
2	372005	1	ISO QNTSTRM 04 S-RED
2	372006	1	ISO QNTSTRM 05 S-BROWN
2	372007	1	ISO QNTSTRM 06 S-GREY
2	372008	1	ISO QNTSTRM 08 S-WHITE
2	372009	1	ISO QNTSTRM 10 S-LT.BLU
2	372010	1	ISO QNTSTRM 15 S-LT.GRN

NOZZLES - HANDHELD SPRAYERS
D1070-HIN, 01:01:16

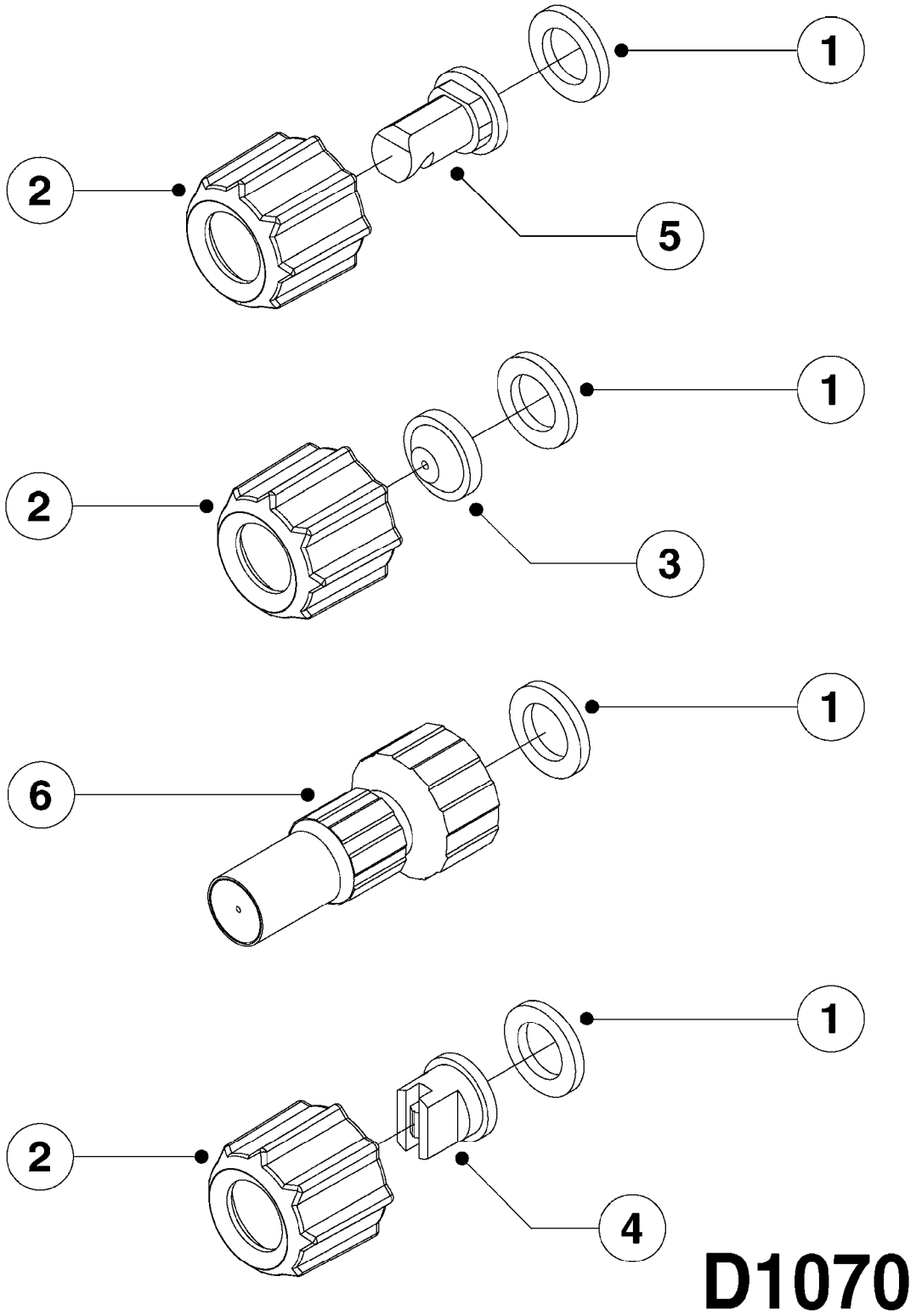

Agroparts: www.HARDI-INTERNATIONAL.com

NOZZLES - HANDHELD SPRAYERS
D1070-HIN, 01:01:16

Date 12.08.2020 11:38

Pos.	parts-nº	order qty	description
1	242370	1	BACKING WASHER
2	322343	1	NOZZLE CAP M18 X 1.5 - 1999
3	371682	1	HOLLOW CONE SPRAY TIP,RED
3	371694	1	HOLLOW CONE SPRAY TIP, YELLOW
3	371695	1	HOLLOW CONE SPRAY TIP,BROWN
3	371696	1	HOLLOW CONE SPRAY TIP,GREY
4	371706	1	NOZZLE ISO F-01-110 ORANGE
4	371707	1	NOZZLE ISO F-015-110 GREEN
4	371708	1	NOZZLE ISO F-02-110 YELLOW
4	371709	1	NOZZLE ISO F-03-110 BLUE
4	371710	1	NOZZLE ISO F-04-110 RED
4	371711	1	NOZZLE ISO F-05-110 BROWN
4	371712	1	NOZZLE ISO F-06-110 GREY
4	371713	1	NOZZLE ISO F-08-110 WHITE
4	371857	1	NOZZLE FAN JET 02E80 YELLOW
4	371946	1	NOZZLE ISO F-025-110 LILAC
4	371963	1	NOZZLE ISO F-075-110 PINK
4	371966	1	NOZZLE ISO F-10-110 LT BLUE
5	372020	1	NOZZLE REFLEX YELLOW AN 0.6
5	372021	1	NOZZLE REFLEX GREEN AN 1.2
5	372022	1	REFL.NOZZLE AN 1.8 BLUE
5	372023	1	NOZZLE FLOOD AN 2.4 RED
6	755835	1	ADJUSTABLE NOZZLE

NOZZLE BODIES-THREADED
D1080-HIN, 01:01:16

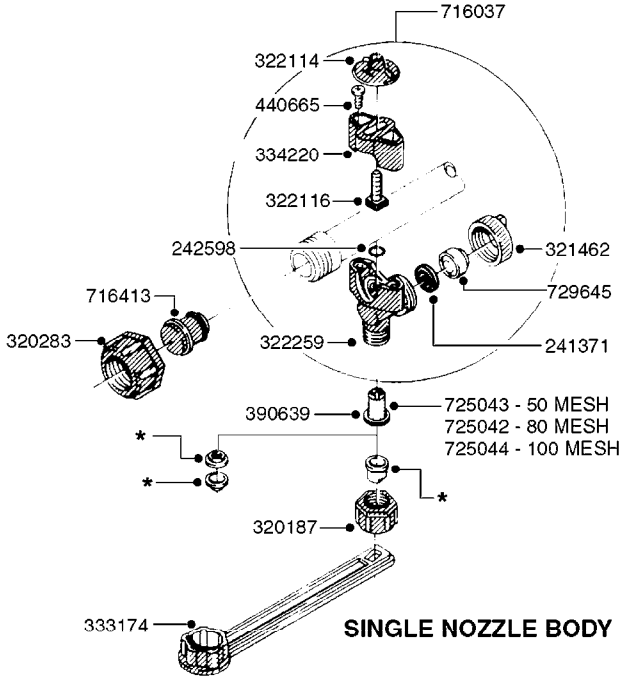

SINGLE NOZZLE BODY

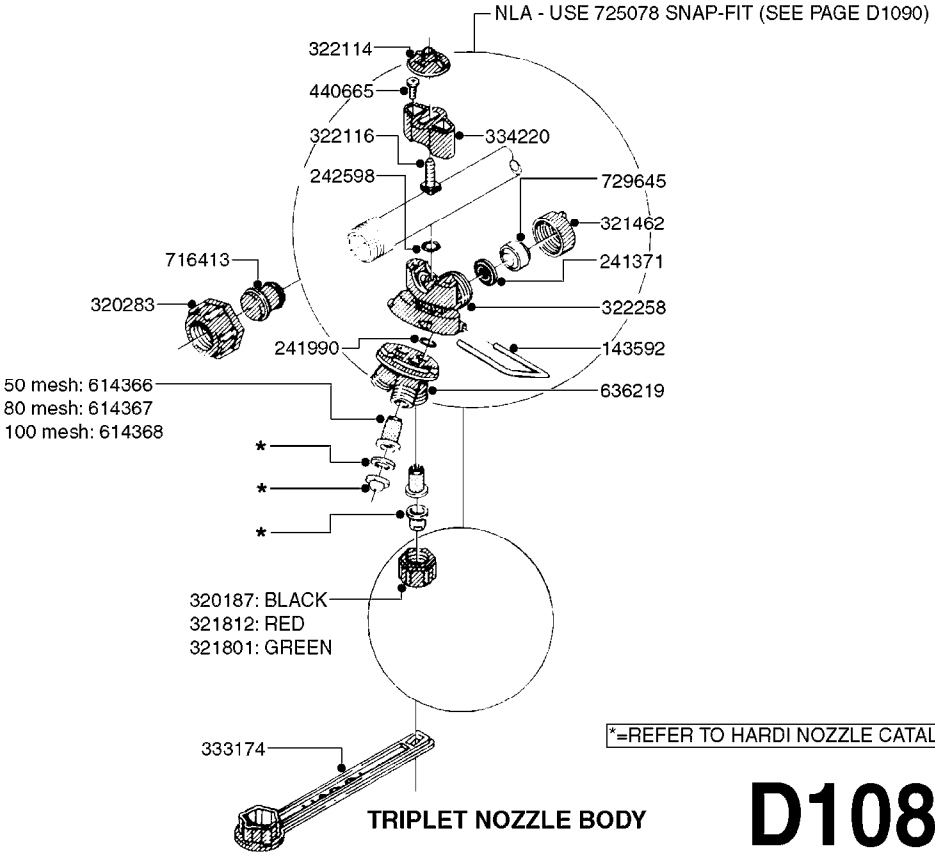

*=REFER TO HARDI NOZZLE CATALOG

TRIPLET NOZZLE BODY

D1080

Agroparts: www.HARDI-INTERNATIONAL.com

NOZZLE BODIES-THREADED
D1080-HIN, 01:01:16

Date 12.08.2020 11:38

parts-n°	order qty	description
143592	1	LOCK CLAMP FOR TRIPLET
241371	1	DIAPHRAGM F.NO-DRIP,VULC
241990	1	O-RING D9.3 X 2.4 VITON
242598	1	O-RING D7.0 X 2.5 NITRIL
320187	1	FITT.DK CAP 3/8" BSP BLACK
320283	1	FITT.DK NUT 3/4"BSP
321462	1	CAP F.NO-DRIP ASSY.
321801	1	FITT.DK CAP 3/8' BSP GREEN
321812	1	FITT.DK CAP 3/8' BSP RED
322114	1	NUT PLASTIC F.NOZZ.H
322116	1	BOLT PLASTIC F.NOZZ.H.
322258	1	HOUSING F.TRIPLET
322259	1	HOUSING LOWER NOZZLE SNGL 3/8"
333174	1	NOZZLE ALIGNMENT KEY
334220	1	YOKE, UPPER NOZZLE BODY
390639	1	O-RING F.NOZZLE FILTER
440665	1	SCREW M4.2X16 STAINLESS
614366	1	FILTER 50 MESH F.NOZZLE BLUE
614367	1	FILTER 80 MESH F.NOZZLE RED
614368	1	FILTER 100 MESH F.NOZZLE YEL.
636219	1	THREADED TURN PLATE F TRIPLET
716037	1	NOZZLE BODY THREADED COMPLETE
716413	1	FITT.DK PLUG ASSY. F.NOZ TUBE
725042	1	SCREEN 80 MESH W.GASKET, RED
725043	1	SCREEN 50 MESH W.GASKET,BLUE
725044	1	SCREEN 100 MESH W.GASKET,YELLO
725078	1	SNAP-FIT TRIPLET W/O NOZZ HOLD
729645	1	NON-DRIP SPRING ASSY.GREEN 10

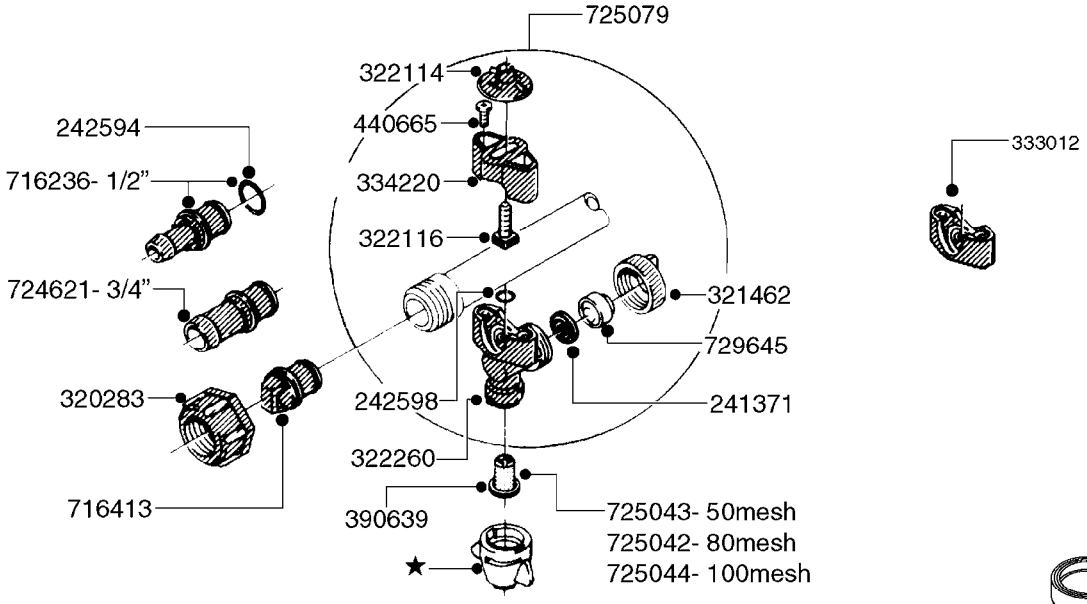

SINGLE NOZZLE BODY

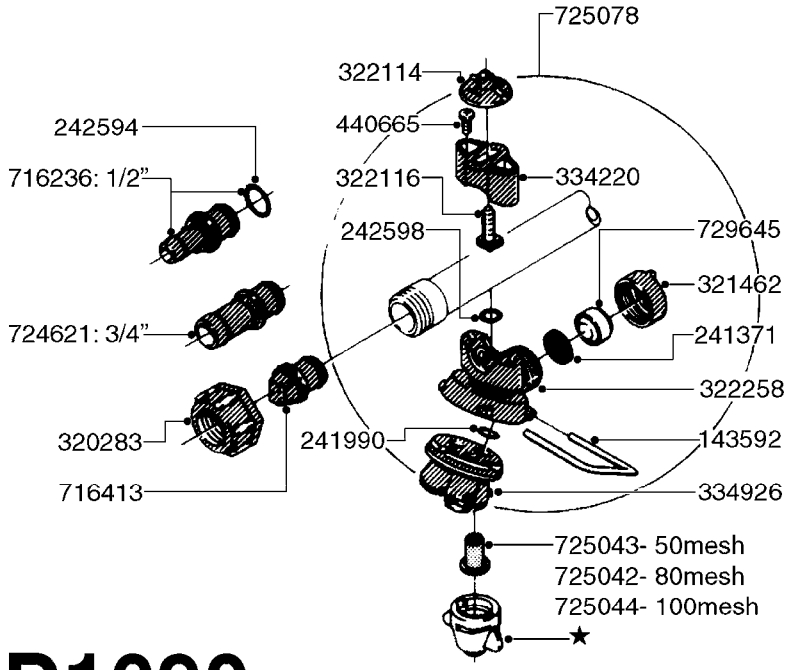

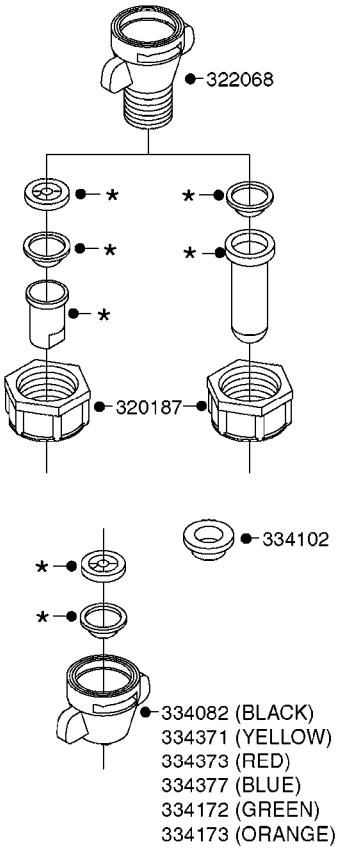

D1090

TRIPLET NOZZLE BODY

*=REFER TO HARDI NOZZLE CATALOG

Agroparts: www.HARDI-INTERNATIONAL.com

NOZZLE BODIES-SNAP FIT
D1090-HIN, 01:01:16

Date 12.08.2020 11:38

parts-n°	order qty	description
143592	1	LOCK CLAMP FOR TRIPLET
241371	1	DIAPHRAGM F.NO-DRIP,VULC
241990	1	O-RING D9.3 X 2.4 VITON
242594	1	O-RING D14 X 1.78 SCH.70-EPDM
242598	1	O-RING D7.0 X 2.5 NITRIL
320187	1	FITT.DK CAP 3/8" BSP BLACK
320283	1	FITT.DK NUT 3/4"BSP
321462	1	CAP F.NO-DRIP ASSY.
322068	1	SNAP-FIT ADAPTER THREAD. HARDI
322114	1	NUT PLASTIC F.NOZZ.H
322116	1	BOLT PLASTIC F.NOZZ.H.
322258	1	HOUSING F.TRIPLET
322260	1	NOZZLE HOLDER LOWER PART
333012	1	NOZZLE HOLD. UPPER PART
334082	1	SNAP-FIT NOZZ.HOLD.CONE BLACK
334102	1	BLANK F.NOZZLE
334172	1	SNAP-FIT NOZZ.HOLD.CONE GREEN
334173	1	SNAP-FIT NOZZ.HOLD.CONE ORANGE
334220	1	YOKE, UPPER NOZZLE BODY
334371	1	SNAP-FIT NOZZLE HOLDER YELLOW
334373	1	SNAP-FIT NOZZLE HOLDER RED
334377	1	SNAP-FIT NOZZLE HOLDER BLUE
334926	1	SNAP-FIT TURN PLATE F TRIPLET
390639	1	O-RING F.NOZZLE FILTER
440665	1	SCREW M4.2X16 STAINLESS
716236	1	FITT.DK HB 1/2" ASSY. F. 3/4"
716413	1	FITT.DK PLUG ASSY. F.NOZ TUBE
724621	1	FITT.DK HB 3/4"ASSY F.3/4" NUT
725042	1	SCREEN 80 MESH W.GASKET, RED
725043	1	SCREEN 50 MESH W.GASKET,BLUE
725044	1	SCREEN 100 MESH W.GASKET,YELLO
725078	1	SNAP-FIT TRIPLET W/O NOZZ HOLD
725079	1	NOZZLE ASSY.SING.SNAP-FIT GREN
729645	1	NON-DRIP SPRING ASSY.GREEN 10

HARDI	**Agroparts: www.HARDI-INTERNATIONAL.com**	
	DOUBLE NOZZLE HOLDER-SNAP FIT D1100-HIN, 01:01:16	Page 0 Date 12.08.2020 11:38

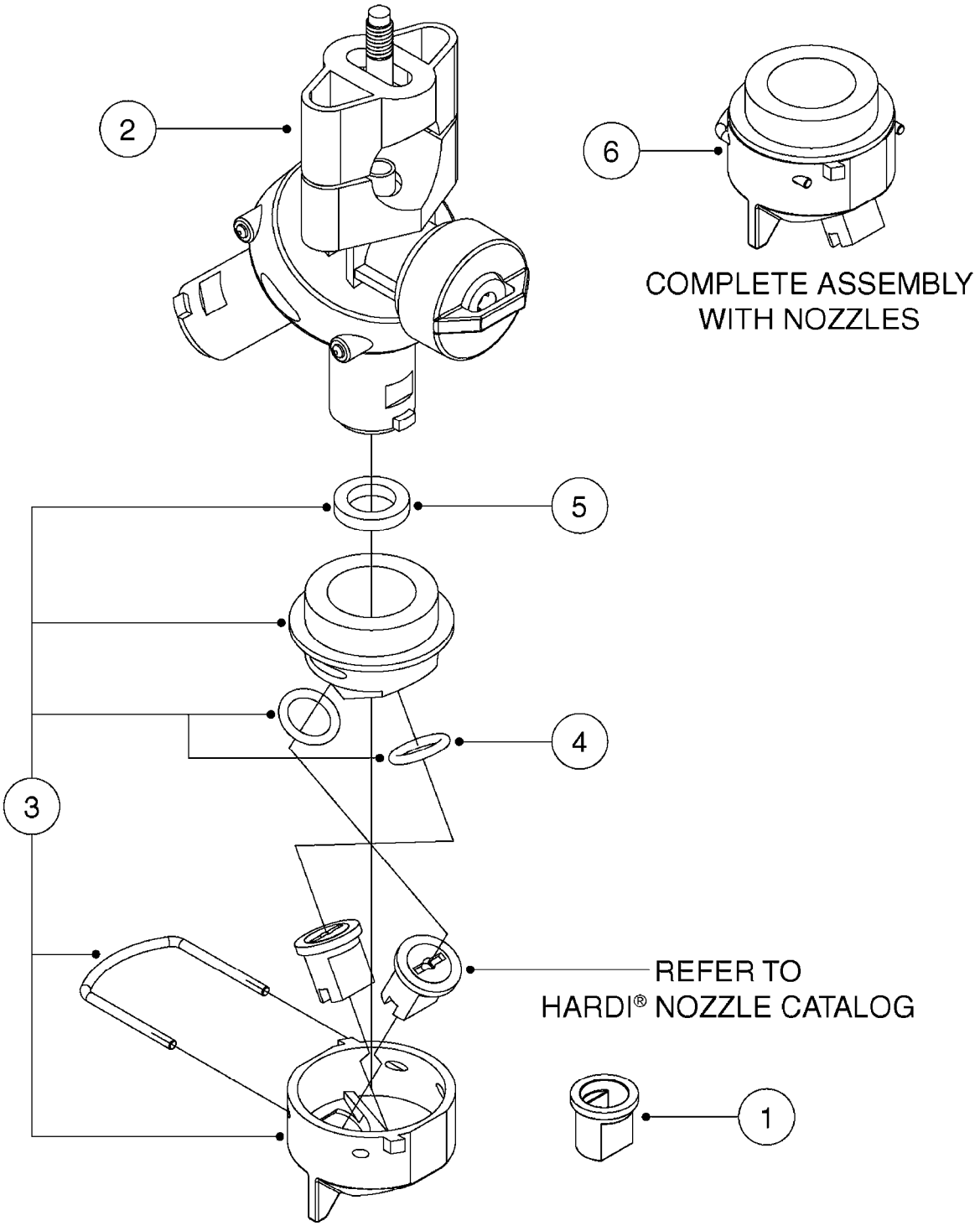

D1100

Agroparts: www.HARDI-INTERNATIONAL.com

DOUBLE NOZZLE HOLDER-SNAP FIT
D1100-HIN, 01:01:16

Date 12.08.2020 11:38

Pos.	parts-nº	order qty	description
1	372140	1	HARDI ISO BLIND CAP
2	725078	1	SNAP-FIT TRIPLET W/O NOZZ HOLD
3	28032503	1	DOUBLE NOZZLE HOLDER LD ISO
4	28040103	1	O-RING F.DOUBLE NOZZLE HOLDER
5	28089103	1	GASKET F.DOUBLE NOZZLE HOLDER
6	70056803	1	DOUBLE NOZZLE CAP ORANGE LD 01
6	70056903	1	DOUBLE NOZZLE CAP GREEN LD 015
6	70057003	1	DOUBLE NOZZLE CAP YELLOW LD 02
6	70057103	1	DOUBLE NOZZLE CAP LILAC LD 025
6	70057203	1	DOUBLE NOZZLE CAP BLUE LD 03
6	70057303	1	DOUBLE NOZZLE CAP RED LD 04
6	70057403	1	DOUBLE NOZZLE CAP BROWN LD 05

NOZZLE TUBES & HOLDER-PLASTIC
D1110-HIN, 08:04:19

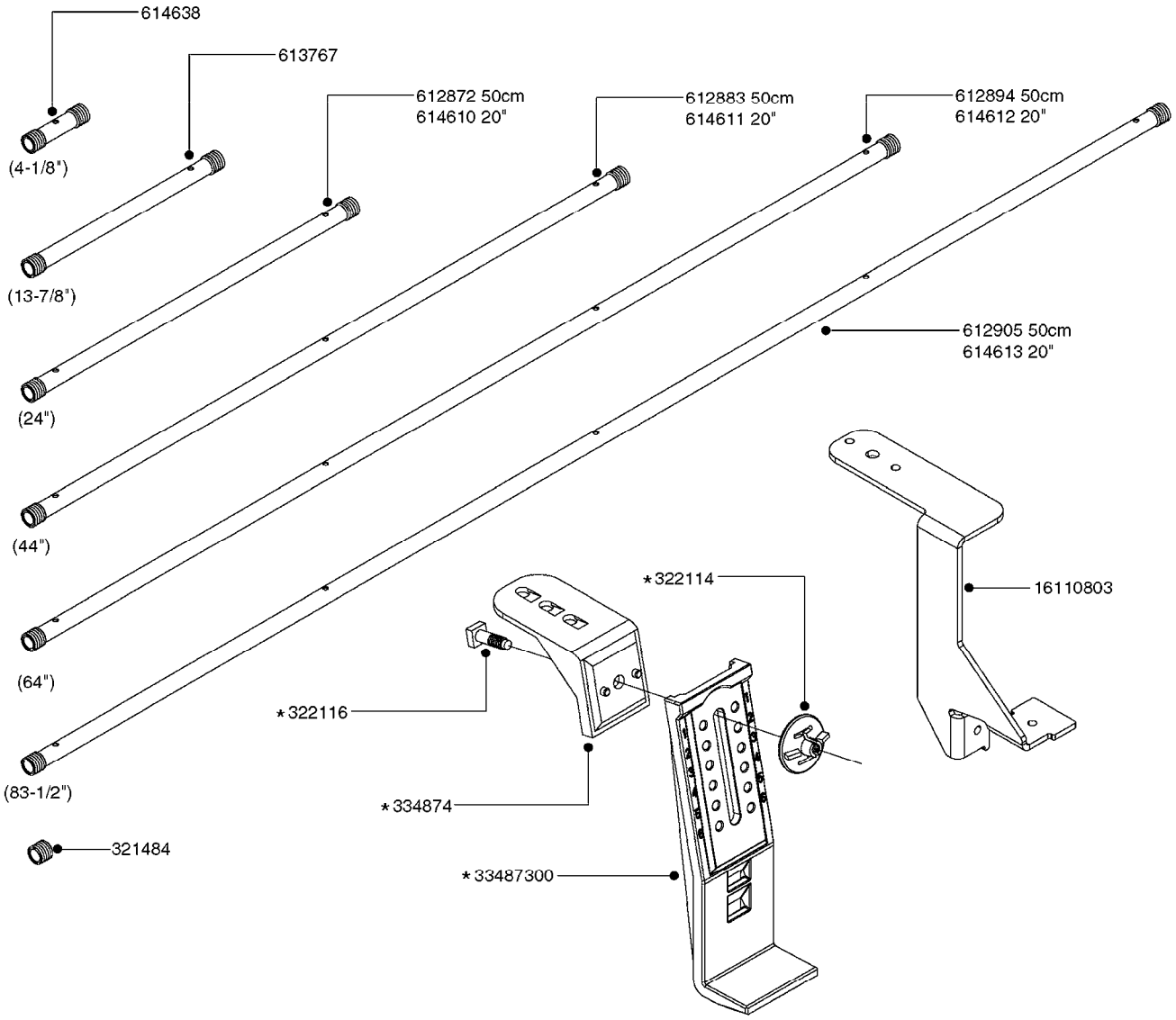

*74009003 - BAG OF 5 COMPLETE
*74008903 - BAG OF 10 COMPLETE

STAINLESS CLAMPS AND INSULATOR
100X60MM - 74008203 BAG OF 10

80X60MM - 74008303 BAG OF 10	80X60MM - 74008403 BAG OF 5
50X50MM - 74008503 BAG OF 10	50X50MM - 74008603 BAG OF 5
50X30MM - 74008703 BAG OF 10	50X30MM - 74008803 BAG OF 5

BLANK TUBES:
614647 - 23-3/4"
614648 - 43-1/4"
614649 - 63"
614650 - 82-1/2"

D1110

Agroparts: www.HARDI-INTERNATIONAL.com

NOZZLE TUBES & HOLDER-PLASTIC
D1110-HIN, 08:04:19

Date 12.08.2020 11:38

parts-n°	order qty	description
321484	1	BUSHING THREADED F.NOZZ.TUBE
322114	1	NUT PLASTIC F.NOZZ.H
322116	1	BOLT PLASTIC F.NOZZ.H.
334874	1	NOZZLE HOLDER - TOP HALF
612872	1	NOZZLE TUBE 2 HOLE L-24"/50CM
612883	1	NOZZLE TUBE 3 HOLE L-44"/50CM
612894	1	NOZZLE TUBE 4 HOLE L-64"/50CM
612905	1	NOZZLE TUBE 5 HOLE L-83.5"/50C
613767	1	NOZZLE TUBE 1 HOLE L-13.875"
614610	1	NOZZLE TUBE 2 HOLE L-24"/SP20"
614611	1	NOZZLE TUBE 3 HOLE L-44"/SP20"
614612	1	NOZZLE TUBE 4 HOLE L-64"/SP20"
614613	1	NOZZLE TUBE 5 HOLE L-83.5"/20"
614638	1	NOZZLE TUBE 1 HOLE L-4.125"
614647	1	NOZZLE TUBE L=600mm NO HOLES
614648	1	NOZZLE TUBE L=1100mm NO HOLES
614649	1	NOZZLE TUBE L=1600mm NO HOLES
614650	1	NOZZLE TUBE L=2100mm NO HOLES
16110803	1	NOZZLE BRACKET VAR SPACINGS
33487300	1	NOZZLE HOLDER - BOTTOM HALF
74008203	1	CLAMP & INSULATOR 100X60 (QTY.10)
74008303	1	CLAMP & INSULATOR 80X60 MM (QTY.10)
74008403	1	CLAMP & INSULATOR 80X60 MM (QTY.5)
74008503	1	CLAMP & INSULATOR 50X50 MM (QTY.10)
74008603	1	CLAMP & INSULATOR 50X50 MM (QTY.5)
74008703	1	CLAMP & INSULATOR 30X50 MM (QTY.10)
74008803	1	CLAMP & INSULATOR 30X50 MM (QTY.5)
74008903	1	NOZZLE HOLDER COMPLETE (QTY.10)
74009003	1	NOZZLE HOLDER COMPLETE (QTY.5)

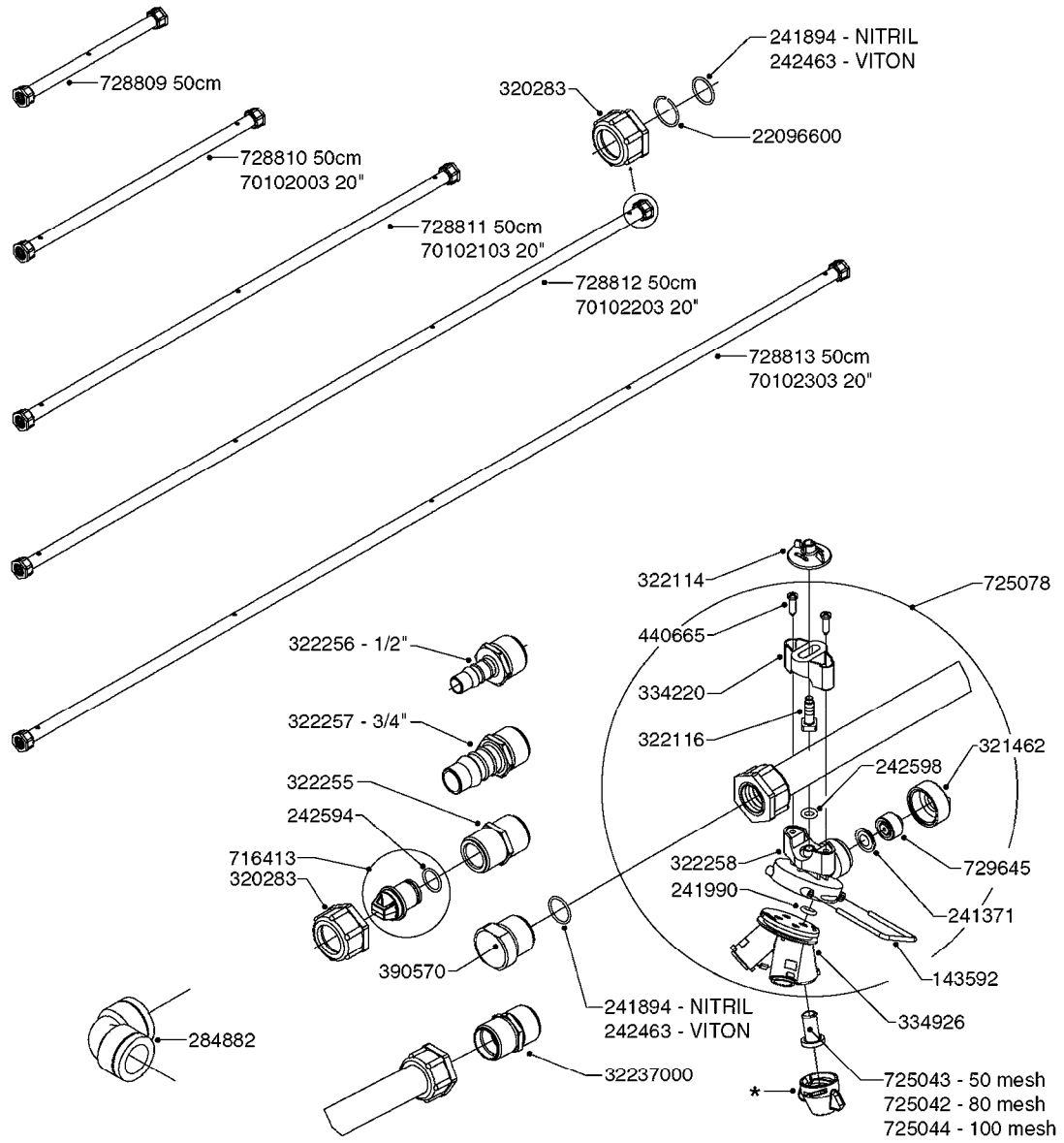

*=REFER TO HARDI® NOZZLE CATALOG

STAINLESS STEEL FEED TUBES

731824	SS feed tube 14"
731825	SS feed tube 24"
731826	SS feed tube 43"
731429	SS feed tube 63"
731430	SS feed tube 83"

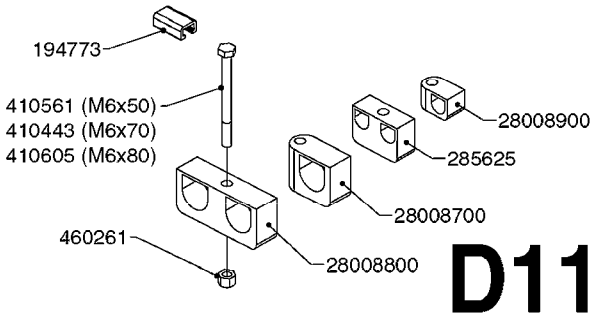

D1120

Agroparts: www.HARDI-INTERNATIONAL.com

NZZL TUBES&FITTNGS-STNLS STEEL
D1120-HIN, 01:01:16

Date 12.08.2020 11:38

parts-n°	order qty	description
143592	1	LOCK CLAMP FOR TRIPLET
194773	1	C CHANNEL 14.5X8,8X3,5X2 L=24
241371	1	DIAPHRAGM F.NO-DRIP,VULC
241894	1	O-RING D17.1 X 1.6 70SH NITR
241990	1	O-RING D9.3 X 2.4 VITON
242463	1	O-RING D17.17 X1.78 VITON
242594	1	O-RING D14 X 1.78 SCH.70-EPDM
242598	1	O-RING D7.0 X 2.5 NITRIL
284882	1	FITT.DK EL 3/4'X3/4' FEMALE 90
285625	1	CLAMP FOR CABLE D12MM
320283	1	FITT.DK NUT 3/4"BSP
321462	1	CAP F.NO-DRIP ASSY.
322114	1	NUT PLASTIC F.NOZZ.H
322116	1	BOLT PLASTIC F.NOZZ.H.
322255	1	FITT.DK NIPPLE 3/4"X 3/4"
322256	1	FITT.DK 1/2'F.SS TUBE
322257	1	FITT.DK 3/4"F.SS TUBE
322258	1	HOUSING F.TRIPLET
334220	1	YOKE, UPPER NOZZLE BODY
334926	1	SNAP-FIT TURN PLATE F TRIPLET
390570	1	FITT.DK PLUG F.SS TUBE
410443	1	BOLT HEX 8.8 DEL M6X70
410561	1	BOLT HEX 8.8 DEL M6X50 FT
410605	1	BOLT HEX 8.8 DEL M6X80
440665	1	SCREW M4.2X16 STAINLESS
460261	1	NUT HEX M6X1.00 LOCK DIN985 A2 SS
716413	1	FITT.DK PLUG ASSY. F.NOZ TUBE
725042	1	SCREEN 80 MESH W.GASKET, RED
725043	1	SCREEN 50 MESH W.GASKET,BLUE
725044	1	SCREEN 100 MESH W.GASKET,YELLO
725078	1	SNAP-FIT TRIPLET W/O NOZZ HOLD
728809	1	NOZZLE TUBE SS 1 HOLE
728810	1	NOZZLE TUBE SS 2 HOLE 500MM
728811	1	NOZZLE TUBE SS 3 HOLE 500MM
728812	1	NOZZLE TUBE SS 4 HOLE 500MM
728813	1	NOZZLE TUBE SS 5 HOLE 500MM
729645	1	NON-DRIP SPRING ASSY.GREEN 10
731429	1	FEED TUBE SS L=1610mm
731430	1	FEED TUBE SS L=2110mm
731824	1	FEED TUBE SS L=360mm
731825	1	FEED TUBE SS L=610mm
731826	1	FEED TUBE SS L=1110mm
22096600	1	SPRING RING Ø20X1.75 SST
28008700	1	BOOM TUBE BRACKET
28008800	1	PIPE HOLDER DOUBLE FOR D22
28008900	1	PIPE HOLDER SGL.
32237000	1	FITT.DK NIPPLE 3/4"X3/4"
70102003	1	NOZZLE TUBE SS 2 HOLE 20"
70102103	1	NOZZLE TUBE SS 3 HOLE 20"
70102203	1	NOZZLE TUBE SS 4 HOLE 20"
70102303	1	NOZZLE TUBE SS 5 HOLE 20"

NOZZLE BODIES - T25
D1130-HIN, 05:04:18

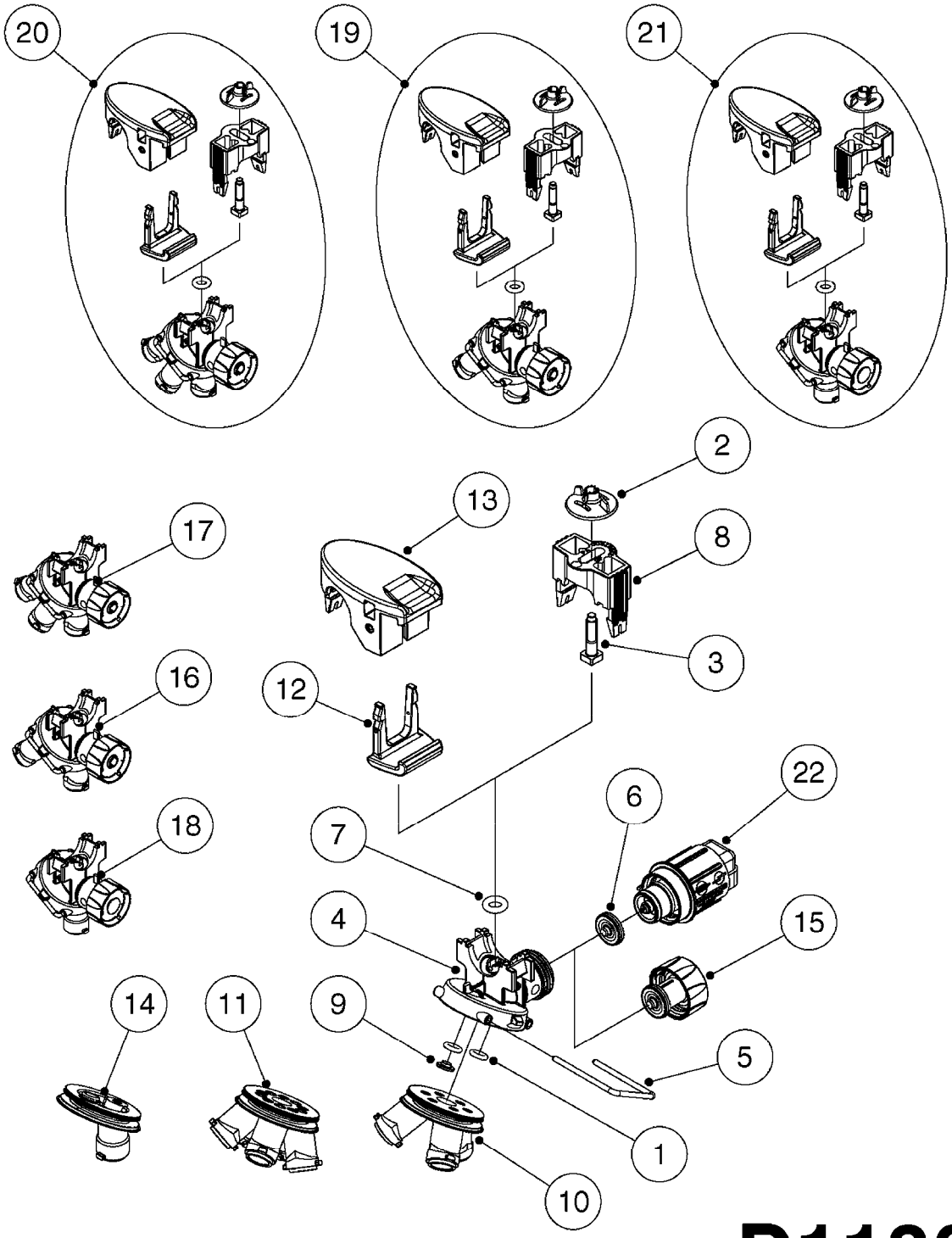

D1130

Agroparts: www.HARDI-INTERNATIONAL.com

NOZZLE BODIES - T25
D1130-HIN, 05:04:18

Date 12.08.2020 11:38

Pos.	parts-nº	order qty	description
1	242431	1	O-RING 6.3X2.4 VITON
2	322114	1	NUT PLASTIC F.NOZZ.H
3	322116	1	BOLT PLASTIC F.NOZZ.H.
3	45002100	1	SCREW M6X20 W.SQ.HEAD SS
4	322365	1	HOUSING F.Ø25 TUBE TRIP/PENT
5	14046100	1	CLAMP Ø3/38 L=51 TRIP/PENT T25
6	24261400	1	MEMBRANE F.NON-DRIP Ø19.8 BLACK EPDM
6	24265500	1	NON DRIP MEMBRANE Ø19,8 FPM/VITON BROWN 60A
7	24262800	1	O-RING Ø10.69 X 3.53 NITRIL
8	33507600	1	TOP,NOZZLE HOLDER T25,BOLT-ON
9	33517000	1	STOP F. ROTARY PLATE TRIP/PENT
10	33517100	1	ROTARY PLATE F. TRIPLET T25
11	33517200	1	ROTARY PLATE F. PENTALET T25
12	33520200	1	LOCK F. T25 BRACKET
13	33520300	1	TOP PLATE T25 NOZZLE '12 30x10
14	33526600	1	SINGLE NOZZLE PLATE, T25
15	72622200	1	NON-DRIP, 1-BAR TRIP/PENT T25 INCLUDES MEMBRANE (24261400)
16	72686400	1	TRIPLET Ø25 NON DRIP LOWER
17	72686500	1	PENTALET Ø25 NON DRIP LOWER
18	73376100	1	SINGLE Ø25 NON DRIP LOWER
19	75001403	1	NOZZLE BODY KIT, T25, TRIPLET
20	75001503	1	NOZZLE BODY KIT, T25, PENTALET
21	75001603	1	NOZZLE BODY KIT, T25, SINGLE
22	75085300	1	ACTUATOR PF '11 (SPARE PART)

HARDI	**Agroparts: www.HARDI-INTERNATIONAL.com**	
	NOZZLE TUBES - PLASTIC T25 D1140-HIN, 29:11:17	Page 0 Date 12.08.2020 11:38

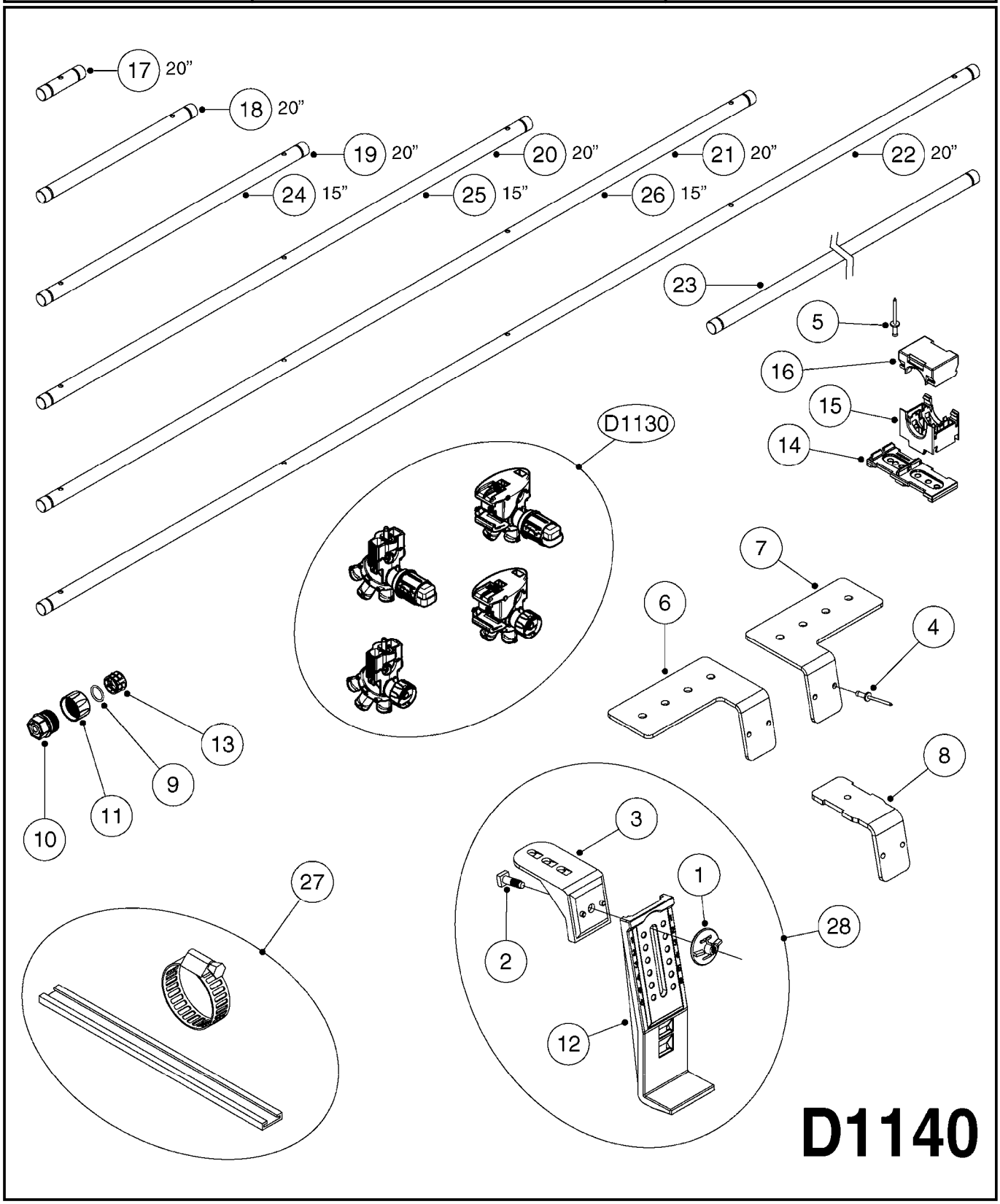

NOZZLE TUBES - PLASTIC T25
D1140-HIN, 29:11:17

Date 12.08.2020 11:38

Pos.	parts-nº	order qty	description
1	322114	1	NUT PLASTIC F.NOZZ.H
2	322116	1	BOLT PLASTIC F.NOZZ.H.
3	334874	1	NOZZLE HOLDER - TOP HALF
4	480783	1	RIVET Ø4x14, GR 7.9-9.5 ALUM
5	480804	1	RIVET Ø4.8x14.5
6	16162503	1	BRACKET,NOZZLE OFFSET,R,BLACK
7	16163003	1	BRACKET,NOZZLE OFFSET,L,BLACK
8	16380800	1	BRACKET, NOZZLE DUMMY, T25
9	24263000	1	O-RING Ø24.4 X 3.1 NITRIL SH70
10	32239300	1	FITT.DK CAP T25
11	32239700	1	FITT.DK NUT T25
12	33487300	1	NOZZLE HOLDER - BOTTOM HALF
13	33515500	1	FITT.DK NUT LOCK RING T25
14	33517900	1	SOCKET F. PIPE HOLDER
15	33518000	1	PIPE HOLDER BETWEEN Ø25
16	33518100	1	PIPE HOLDER TOP Ø25
17	34141700	1	NOZ.TUBE-PP, T25 X 200, 1-HOLE
18	34141800	1	NOZ.TUBE-PP, T25 X 374, 1-HOLE
19	34141900	1	NOZ.TUBE-PP, T25 X 628, 2-20"
20	34142000	1	NOZ.TUBE-PP, T25 X 1136, 3-20"
21	34142100	1	NOZ.TUBE-PP, T25 X 1644, 4-20"
22	34142200	1	NOZ.TUBE-PP, T25 X 2152, 5-20"
23	34144800	1	FEED TUBE-PP, T25 X 1020
23	34145400	1	FEED TUBE-PP, T25 X 1270
23	34145500	1	FEED TUBE-PP, T25 X 1320
23	34145600	1	FEED TUBE-PP, T25 X 1370
23	34146900	1	FEED TUBE-PP, T25 X 1970
23	34148000	1	FEED TUBE-PP, T25 X 2470
23	34148200	1	FEED TUBE-PP, T25 X 2570
23	34148300	1	FEED TUBE-PP, T25 X 2620
23	34148800	1	FEED TUBE-PP, T25 X 2820
23	34149600	1	FEED TUBE-PP, T25 X 3170
23	34150400	1	FEED TUBE-PP, T25 X 3570
23	34150700	1	FEED TUBE-PP, T25 X 3670
23	34150800	1	FEED TUBE-PP, T25 X 3720
23	34152500	1	FEED TUBE-PP, T25 X 4520
24	34158600	1	NOZ.TUBE-PP, T25 X 501, 2-15"
25	34158700	1	NOZ.TUBE-PP, T25 X 882, 3-15"
26	34158800	1	NOZ.TUBE-PP, T25 X 1283, 4-15"
27	74008203	1	CLAMP & INSULATOR 100X60 (QTY.10)
27	74008303	1	CLAMP & INSULATOR 80X60 MM (QTY.10)
27	74008403	1	CLAMP & INSULATOR 80X60 MM (QTY.5)
27	74008503	1	CLAMP & INSULATOR 50X50 MM (QTY.10)
27	74008603	1	CLAMP & INSULATOR 50X50 MM (QTY.5)
27	74008703	1	CLAMP & INSULATOR 30X50 MM (QTY.10)
27	74008803	1	CLAMP & INSULATOR 30X50 MM (QTY.5)
28	74008903	1	NOZZLE HOLDER COMPLETE (QTY.10)
28	74009003	1	NOZZLE HOLDER COMPLETE (QTY.5)

	Agroparts: www.HARDI-INTERNATIONAL.com	
HARDI	NOZZLE TUBES - STNLS STEEL T25 D1150-HIN, 01:03:18	Page 0 Date 12.08.2020 11:38

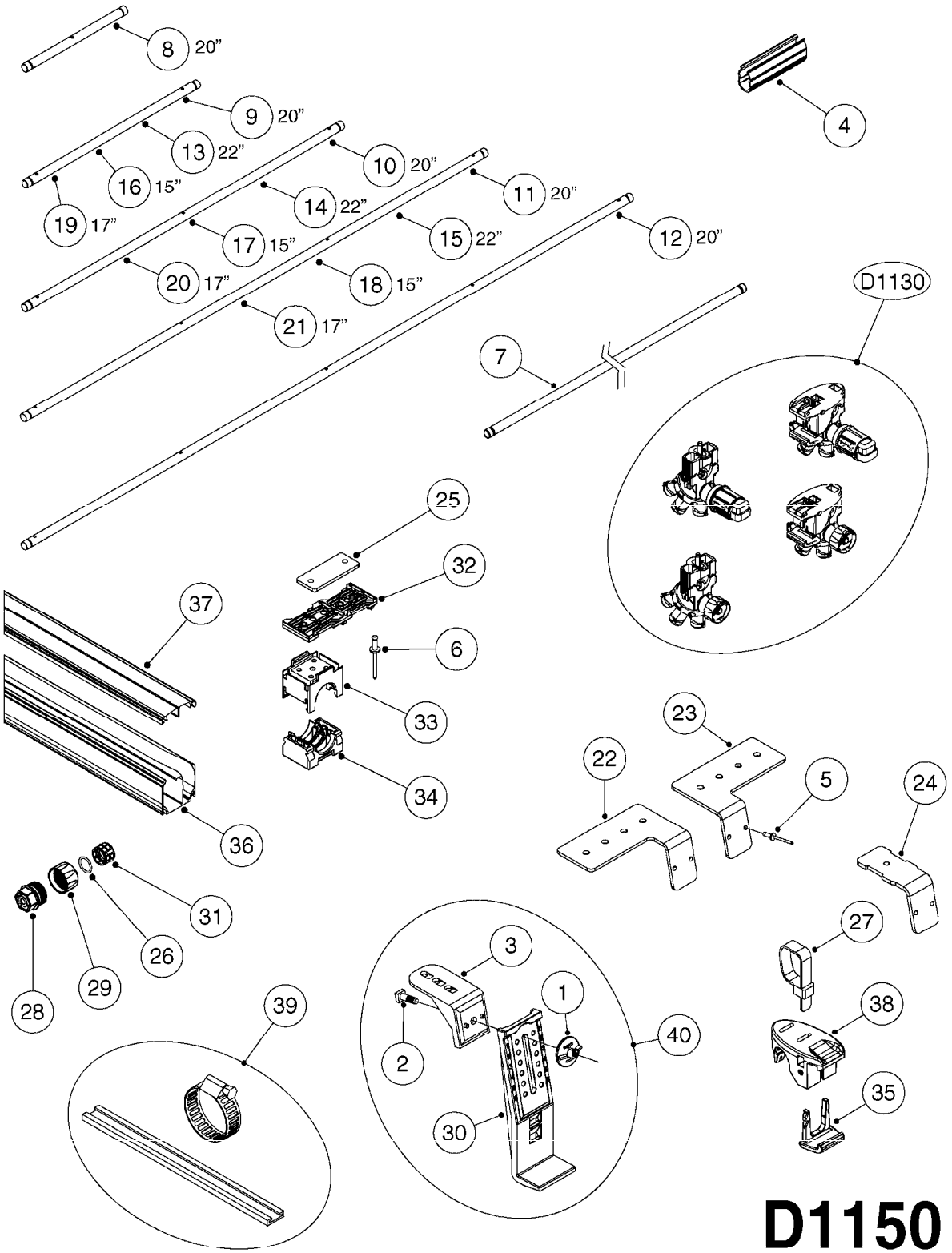

D1150

Agroparts: www.HARDI-INTERNATIONAL.com

NOZZLE TUBES - STNLS STEEL T25
D1150-HIN, 01:03:18

Date 12.08.2020 11:38

Pos.	parts-n°	order qty	description
1	322114	1	NUT PLASTIC F.NOZZ.H
2	322116	1	BOLT PLASTIC F.NOZZ.H.
3	334874	1	NOZZLE HOLDER - TOP HALF
4	341341	1	CABLE HOLDER 250MM
4	341342	1	CABLE HOLDER 375MM
5	480783	1	RIVET Ø4x14, GR 7.9-9.5 ALUM
6	480804	1	RIVET Ø4.8x14.5
7	15149200	1	FEED TUBE-SS, T25 X 1020
7	15149300	1	FEED TUBE-SS, T25 X 1220
7	15149400	1	FEED TUBE-SS, T25 X 2270
7	15149500	1	FEED TUBE-SS, T25 X 2820
7	15149600	1	FEED TUBE-SS, T25 X 3670
7	15149700	1	FEED TUBE-SS, T25 X 4520
7	15149800	1	FEED TUBE-SS, T25 X 2620
7	15149900	1	FEED TUBE-SS, T25 X 3120
7	15154800	1	FEED TUBE-SS, T25 X 3770
7	15154900	1	FEED TUBE-SS, T25 X 1970
7	15155000	1	FEED TUBE-SS, T25 X 2770
7	15155100	1	FEED TUBE-SS, T25 X 3170
7	15155200	1	FEED TUBE-SS, T25 X 3820
7	15155300	1	FEED TUBE-SS, T25 X 5420
7	15155400	1	FEED TUBE-SS, T25 X 4070
7	15155500	1	FEED TUBE-SS, T25 X 4920
7	15180000	1	FEED TUBE-SS, T25 X 4720
7	15180100	1	FEED TUBE-SS, T25 X 3370
8	15155900	1	NOZ.TUBE-SS, T25 X 374, 1-HOLE
9	15156000	1	NOZ.TUBE-SS, T25 X 628, 2-20"
10	15156100	1	NOZ.TUBE-SS, T25 X 1136, 3-20"
11	15156200	1	NOZ.TUBE-SS, T25 X 1644, 4-20"
12	15156300	1	NOZ.TUBE-SS, T25 X 2152, 5-20"
13	15173800	1	NOZ.TUBE-SS, T25 X 679, 2-22"
14	15173900	1	NOZ.TUBE-SS, T25 X 1238, 3-22"
15	15174000	1	NOZ.TUBE-SS, T25 X 1797, 4-22"
16	15187400	1	NOZ.TUBE-SS, T25 X 501, 2-15"
17	15187500	1	NOZ.TUBE-SS, T25 X 882, 3-15"
18	15187600	1	NOZ.TUBE-SS, T25 X 1263, 4-15"
19	15276200	1	NOZ.TUBE-SS, T25 X 552, 2-17"
20	15276300	1	NOZ.TUBE-SS, T25 X 984, 3-17"
21	15276400	1	NOZ.TUBE-SS, T25 X 1416, 4-17"
22	16162503	1	BRACKET,NOZZLE OFFSET,R,BLACK
23	16163003	1	BRACKET,NOZZLE OFFSET,L,BLACK
24	16380800	1	BRACKET, NOZZLE DUMMY, T25
25	17015503	1	FLAT BAR, 1/8"X 1", L=60
26	24263000	1	O-RING Ø24.4 X 3.1 NITRIL SH70
27	28025103	1	TIE STRAP L=21" x W=3/8"
28	32239300	1	FITT.DK CAP T25
29	32239700	1	FITT.DK NUT T25
30	33487300	1	NOZZLE HOLDER - BOTTOM HALF
31	33515500	1	FITT.DK NUT LOCK RING T25
32	33517900	1	SOCKET F. PIPE HOLDER
33	33518000	1	PIPE HOLDER BETWEEN Ø25
34	33518100	1	PIPE HOLDER TOP Ø25
35	33520200	1	LOCK F. T25 BRACKET
36	34153800	1	CABLE TRAY EL/HY, L=2855
36	34154100	1	CABLE TRAY EL/HY, L=5400
37	34154200	1	CABLE TRAY COVER, L=2855
37	34154500	1	CABLE TRAY COVER, L=5400
38	39134800	1	NOZZLE TUBE DUMMY BRACKET T25
39	74008203	1	CLAMP & INSULATOR 100X60 (QTY.10)
39	74008303	1	CLAMP & INSULATOR 80X60 MM (QTY.10)
39	74008403	1	CLAMP & INSULATOR 80X60 MM (QTY.5)

NOZZLE TUBES - STNLS STEEL T25
D1150-HIN, 01:03:18

Date 12.08.2020 11:38

Pos.	parts-nº	order qty	description
39	74008503	1	CLAMP & INSULATOR 50X50 MM (QTY.10)
39	74008603	1	CLAMP & INSULATOR 50X50 MM (QTY.5)
39	74008703	1	CLAMP & INSULATOR 30X50 MM (QTY.10)
39	74008803	1	CLAMP & INSULATOR 30X50 MM (QTY.5)
40	74008903	1	NOZZLE HOLDER COMPLETE (QTY.10)
40	74009003	1	NOZZLE HOLDER COMPLETE (QTY.5)

	Agroparts: www.HARDI-INTERNATIONAL.com	
HARDI	HAZ 120' TRAPEZE CENTER D1200-HIN, 05:06:19	Page 0 Date 12.08.2020 11:38

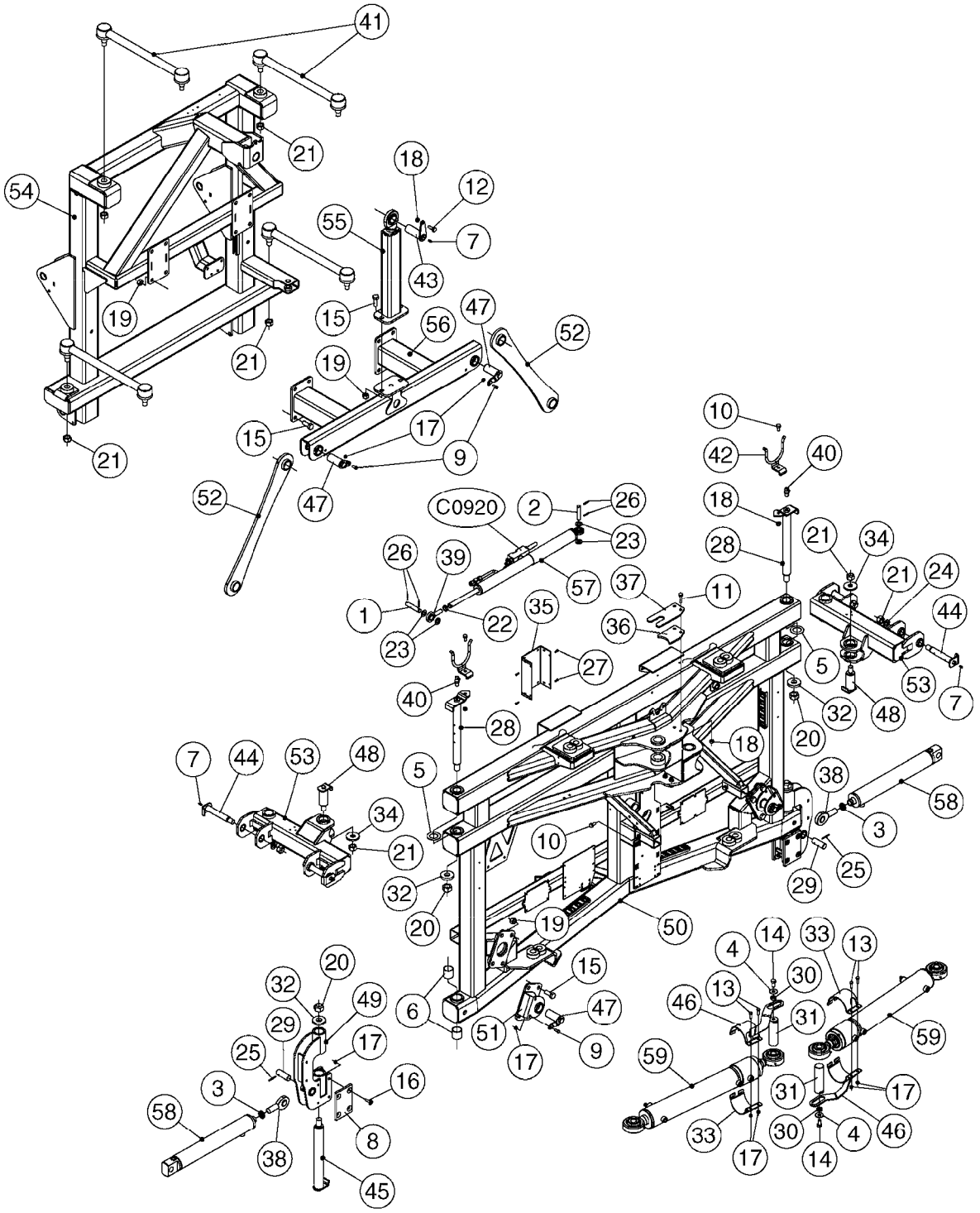

D1200

Agroparts: www.HARDI-INTERNATIONAL.com

HAZ 120' TRAPEZE CENTER
D1200-HIN, 05:06:19

Date 12.08.2020 11:38

Pos.	parts-n°	order qty	description
1	145224	1	SHAFT FOR HY CYLINDER
2	146498	1	PIN D16.8 X 75
3	147128	1	NUT M24X2 NV-32
4	160624	1	WASHER PLATE 6/13 X3
5	210861	1	BUSHING
6	210865	1	BUSHING 40mm40mm DU
7	283699	1	GREASE NIPPLE M6X1
8	390788	1	TEFLON WARE PAD
9	420582	1	BOLT HEX 8.8 DEL M8X20 FT A2
10	420626	1	BOLT HEX 8.8 DEL M10X20 FT
11	420965	1	M10X40 MACHINE SCREW STAINLESS
12	421002	1	BOLT HEX 8.8 DEL M10X30 FT DIN933
13	421046	1	BOLT HEX M8X25/25 A2 SS DIN933
14	430522	1	BOLT HEX 8.8 DEL M12X25 FT
15	430581	1	BOLT HEX 8.8 DEL M16X40 FT
16	450343	1	SCREW M8X30 ALLEN HEAD C/S SS
17	460143	1	LOCK NUT M8 SST A2 DIN985
18	460423	1	NUT HEX M10X1.50 LOCK DIN985A2 SS
19	460585	1	LOCKING NUT M16 DIN985 A2 SS
20	460747	1	NUT HEX M24 LOCK
21	460806	1	NUT HEX M20X2.50 LOCK DIN985A2 SS
22	461198	1	NUT HEX M16X2 JAMB
23	471128	1	WASHER, M16, Ø30/17.0X 3.0, SS
24	471180	1	LOCK WASHER NORDLOCK M20 ELZ
25	480708	1	PIN D4 X 45
26	480730	1	SPRING DOWEL PIN 5X30 SST
27	480806	1	RIVET, POP, Ø4.8X14/Ø9.5 SS
28	615812	1	PIN
29	14062500	1	PIN Ø25/Ø4 L= 70
30	14062900	1	BUSHING Ø 25/Ø12.5 L= 8
31	14146300	1	PIN Ø40.0 L= 140
32	16375500	1	WASHER 10.0X60X25 RED
33	16406300	1	BRACKET F. FOLDING CYLINDER, RED
34	16411300	1	WASHER Ø 60.0/ 20.5X 6.0 SS
35	16458800	1	PROTECTION F. TWIN HOSES
36	16525300	1	SPACER PLATE WIDE CENTER
37	16525400	1	LOCKPLATE 120' HAZ 3.1 WIDE
38	21091800	1	LINK HEAD Ø25,M24X55 W/ GREASE NIP. DELTA
39	21091900	1	LINK HEAD M16 x D17 DELTA
40	28028100	1	GREASE NIPPLE 1/8'RG 90°
41	28066100	1	STEER.ARM COMPL.2XØ35 L=19.7"
42	61005200	1	HOSE HOLDER
43	61037600	1	PIN Ø34.8/L=94
44	61041900	1	PIN D25X137/ M20 DEL.
45	61043100	1	PIN D40X341/ M24 DEL.
46	61083300	1	GUIDE F. FOLDING CYLINDER
47	61100200	1	PIN Ø34,8 L=80, DTZ
48	61100600	1	BEARINGBOLT Ø40/M20 L=85.5
49	63172600	1	PIVOT JOINT BOTTOM 32-36M HAZ '16
50	63195600	1	WIDE CENTER FRAME HAZ 120' RED
51	63204600	1	TRAPEZ BOTTOM MOUNT DTZ PAINTED
52	63205600	1	TRAPEZ ARM DTZ PAINTED
53	63207300	1	UPPER HINGE, HAZ 120'. '15, RED
54	63218300	1	LIFTFRAME LOW 120' HAZ RED
55	63219500	1	PENDULUM F. TRAPEZE HAZ RED
56	63219600	1	TRAPEZE TOP MOUNT HAZ RED
57	78126000	1	CYLINDER,DAMPNER,LOCKING
58	78134600	1	SIN.CYL.Ø60/30_380_M24X2
59	78134700	1	CYLINDER 80/45 L=380 WITH DAMP L=40

	Agroparts: www.HARDI-INTERNATIONAL.com	
HARDI	HAZ 3.1 120' TF BOOM 2 FOLD INNER D1210-HIN, 31:01:18	Page 0 Date 12.08.2020 11:38

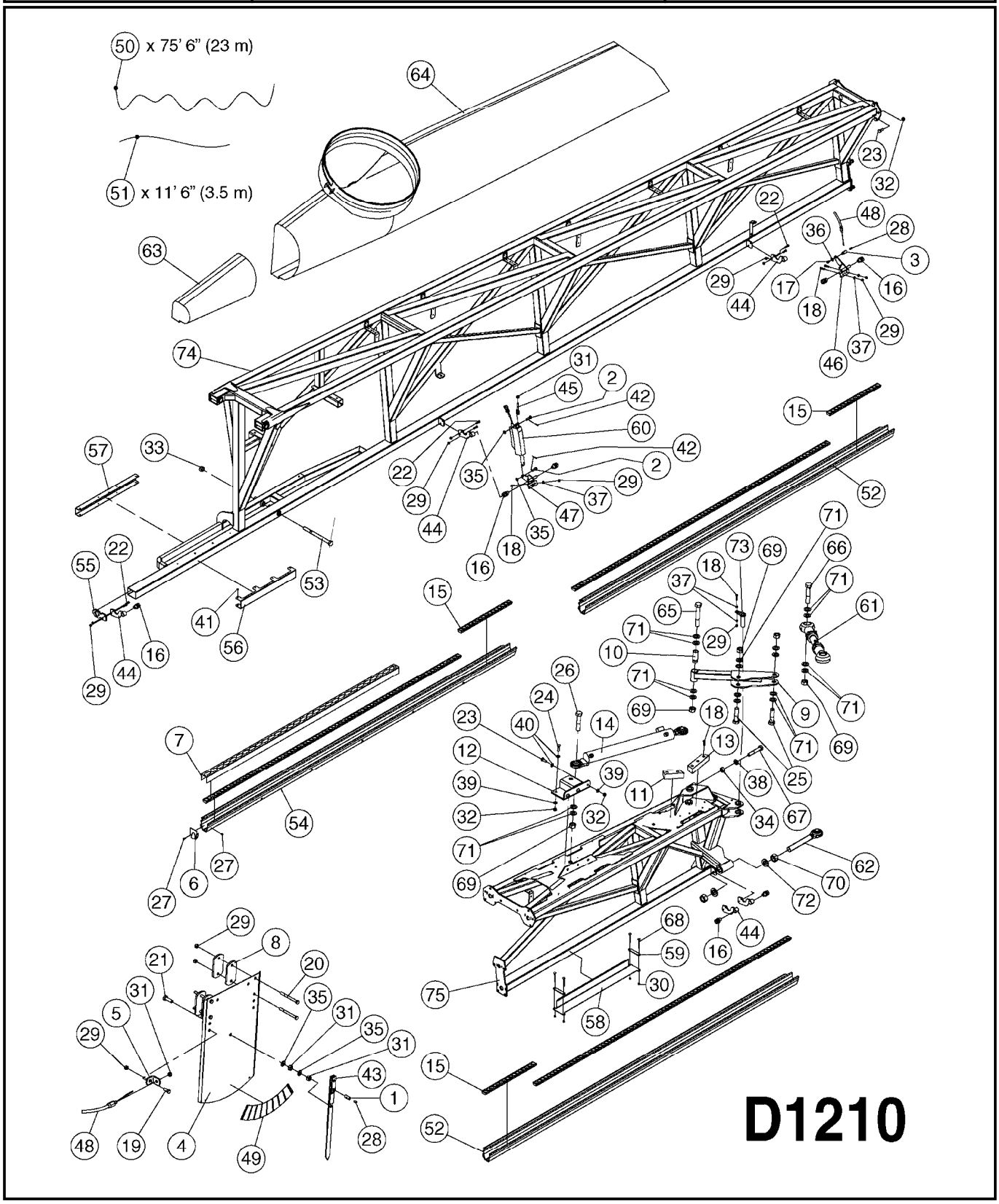

Agroparts: www.HARDI-INTERNATIONAL.com

HAZ 3.1 120' TF BOOM 2 FOLD INNER
D1210-HIN, 31:01:18

Date 12.08.2020 11:38

Pos.	parts-nº	order qty	description
1	142881	1	WIRE HOLDER FOR REMOTE CONTROL
2	146023	1	PIN FOR COGWHEEL
3	147485	1	BUSHING Ø13.0/M6 L=31/Ø4.2/Ø10
4	161056	1	PLATE F. TILT INDICATOR
5	161059	1	BRACKET F.TILT INDICATOR CABLE
6	161183	1	AIR SLOT END RH
6	161185	1	AIR SLOT END LH
7	161675	1	AIR DIFFUSER L=1870 R.H.
8	172213	1	FLAT BAR F.BOOM STRAP
9	278584	1	LEFT LINK ARM TR5
9	288063	1	RIGHT LINK ARM
10	278586	1	BUSHING 35X5 L82
11	278594	1	SUPPORT BLOCK RIGHT 115X135X50X40
11	288065	1	SUPPORT BLOCK LEFT 115X135X50X40
12	278595	1	RIGHT CYLINDER BRACKET
12	278596	1	LEFT CYLINDER BRACKET
13	288066	1	SUPPORT BLOCK 178/220X50X40
14	288077	1	DOB.CYL.Ø63/36-500 RIGHT 001-514D
14	781806	1	CYLINDER 63/36 L=500 LEFT 001-514G
15	334887	1	AIRGUIDE TWIN FORCE L=494
16	390791	1	BUSHING F. AIR SLOT
17	410546	1	BOLT HEX M6X12 A2 SS DIN933
18	420567	1	BOLT HEX 8.8 DEL M8X30 FT
19	420582	1	BOLT HEX 8.8 DEL M8X20 FT A2
20	420847	1	BOLT HEX 8.8 DEL M8X85
21	421002	1	BOLT HEX 8.8 DEL M10X30 FT DIN933
22	421046	1	BOLT HEX M8X25/25 A2 SS DIN933
23	430286	1	BOLT HEX 8.8 DEL M12X30 FT
24	430717	1	BOLT HEX 8.8 RAW M12x40
25	438033	1	SCREW 1"X 4" DIN931
26	438034	1	SCREW M 1"X 5" DEL DIN931
27	440673	1	SCREW F.PLASTIC 5X12 SS
28	450144	1	SCREW M6X10 8.8
29	460143	1	LOCK NUT M8 SST A2 DIN985
30	460261	1	NUT HEX M6X1.00 LOCK DIN985 A2 SS
31	460423	1	NUT HEX M10X1.50 LOCK DIN985A2 SS
32	460703	1	NUT HEX M12X1.75 LOCK DIN985A2 SS
33	460747	1	NUT HEX M24 LOCK
34	461228	1	NUT HEX M20
35	471122	1	WASHER, M10, Ø20/10.5X 2.0, SS
36	471124	1	WASHER, M6, Ø18/ 6.4X 1.6, SS
37	471126	1	WASHER, M8, Ø16/ 8.4X 1.6, SS
38	471180	1	LOCK WASHER NORDLOCK M20 ELZ
39	478032	1	CONTACT WASHER 12X24X2.5
40	478067	1	WASHER Z12N 13X24X2.5 A2
41	480227	1	POP NUT Ø4 X9.5 RST/RST
42	480728	1	PIN D3.2X20 SPLIT
43	615756	1	INDICATOR ARROW
44	615788	1	BRACKET
45	615808	1	ANCHOR ADJ.F.ACTUATOR
46	637850	1	BKT AIR SLOT RH
47	637855	1	BKT AIR SLOT LH
47	637856	1	BKT AIR SLOT RH
48	715444	1	REMOTE CONTROL CABLE L=2000
49	978503	1	DECAL TILT SCALE TWIN FORCE
50	981474	1	6MM ELASTIC CORD X M
51	981504	1	ELASTIC CORD 4MM
52	14032200	1	AIR SLOT RAIL L=2995/D25
53	14064600	1	BEARING BOLT Ø25.0 L= 270/260
54	14130500	1	AIRPROFILE L=3125 R. Ø25
54	14130700	1	AIRPROFILE L=3125 L. Ø25

Pos.	parts-n°	order qty	description
55	16089900	1	PLATE 6.0X128.5X58.5/M. HOLE
56	16474900	1	WEARPLATE RST.1.5X128.5X580 2XBEND
57	16475000	1	WEARPLATE RST.1.5X168.5X535 2XBEND
58	16483600	1	TRANSPORT PROTECTION, HAZ
59	16483700	1	STRIP FOR 16483600
60	26047400	1	ACTUATOR 0-130MM L=0,5M/4WIREAMP
61	28041904	1	DOUBLE LINK EYE ARM D26 M30 010-007
62	28054604	1	ARTICULATED EYE M34X200
63	39148800	1	AIRBAG HAZ WIDE CENTER 2 OF 2
64	39149000	1	AIRBAG 36M HAZ R. 1 OF 2
64	39149100	1	AIRBAG 36M HAZ L. 1 OF 2
65	43051704	1	BOLT 1" X 7 " 1/2 HEX UNC DIN931
66	43052304	1	BOLT 1"X6" HEX UNC DIN931
67	43100600	1	BOLT HEX SS M12 X 110
68	44075100	1	BOLT, CARRIAGE, M6X70 DIN603 SS
69	46001704	1	NUT NYLOCK 1" UNC
70	46015204	1	NUT HEX M34X2.0
71	47001904	1	WASHER NORDLOCK Ø1"
72	47002104	1	WASHER NORDLOCK M33 LARGE
73	61101800	1	PINBOLT W. FLANGE Ø25.4 L=100
74	63172200	1	IN.WING IN.PART 120' R. NEG.TILT
74	63172300	1	IN.WING IN.PART 120' L. NEG.TILT
75	63201200	1	INNERWING OUTERPART 120' HAZ R.
75	63201300	1	INNERWING OUTERPART 120' HAZ L.

HARDI	**Agroparts: www.HARDI-INTERNATIONAL.com**	
	HAZ 3.1 120' TF BOOM 2 FOLD OUTER D1220-HIN, 31:01:18	Page 0 Date 12.08.2020 11:38

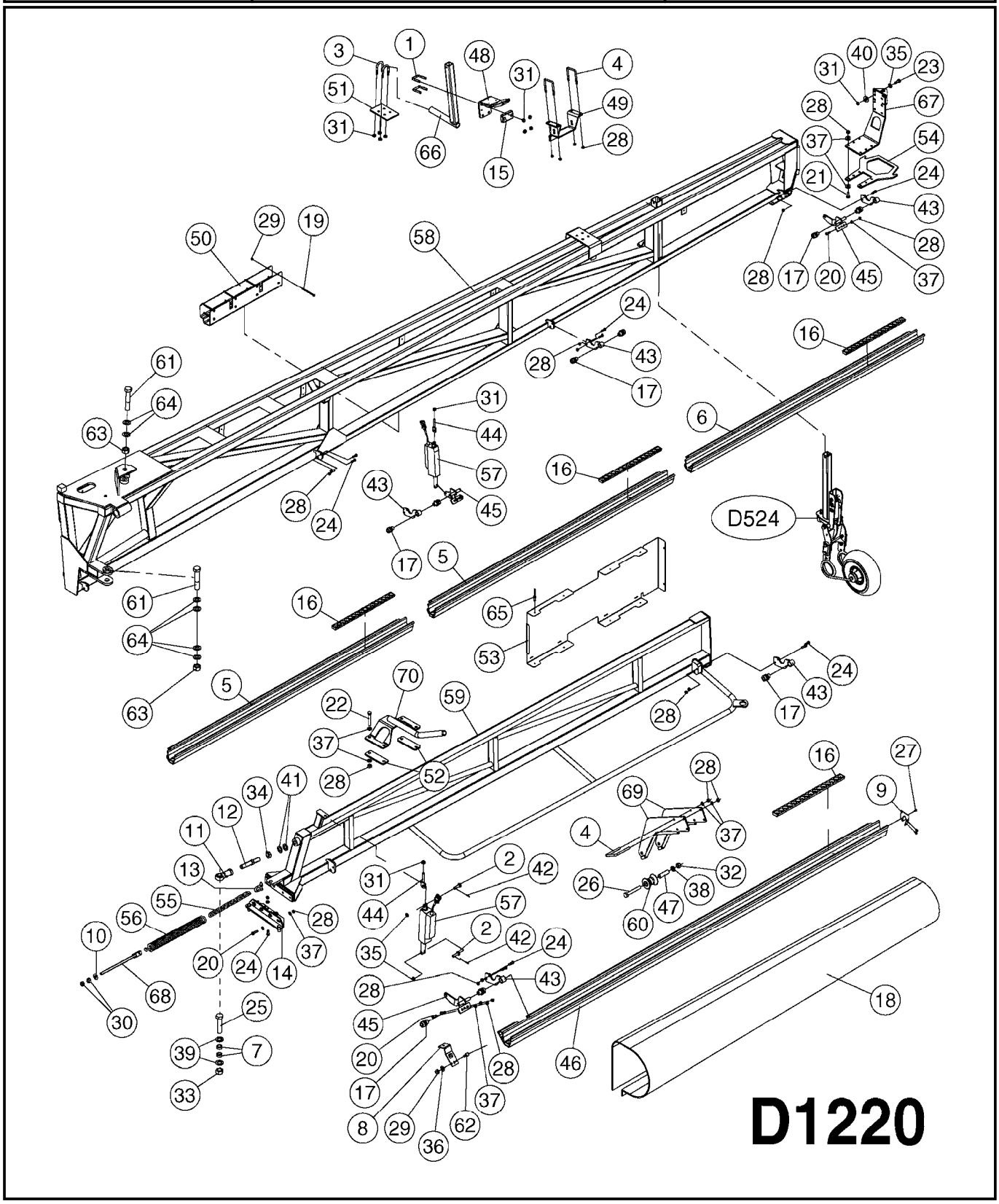

Agroparts: www.HARDI-INTERNATIONAL.com

HAZ 3.1 120' TF BOOM 2 FOLD OUTER
D1220-HIN, 31:01:18

Date 12.08.2020 11:38

Pos.	parts-nº	order qty	description
1	143161	1	BOLT U M10 40X40
2	146023	1	PIN FOR COGWHEEL
3	146267	1	BOLT U F.500 EAG BRACE
4	146843	1	BOLT U M8 F.60 x 60
5	147486	1	AIR SLOT RAIL L=1995/D25
6	147488	1	AIR SLOT RAIL L=1935/D25
7	158739	1	BUSHING 3/4"X10
8	161128	1	NOZZLE HOLDER TF
9	161183	1	AIR SLOT END RH
9	161185	1	AIR SLOT END LH
10	165557	1	WASHER D28.0/D12.2X2.0 SS
11	278141	1	BALL JOINT M20X1.5 LEFT
12	278459	1	ROD M20X1.5
13	281912	1	SHACKLE M-10
14	288062	1	ANGLE PLATE TR5
15	334603	1	RUBBER STOP 86X48X15
16	334887	1	AIRGUIDE TWIN FORCE L=494
17	390791	1	BUSHING F. AIR SLOT
18	391183	1	AIR BAG F.BREAKAWAY 3M HAZ-R.
18	391184	1	AIR BAG F.BREAKAWAY 3M HAZ-L.
19	410524	1	BOLT HEX 8.8 DEL M6X100
20	420567	1	BOLT HEX 8.8 DEL M8X30 FT
21	420744	1	BOLT HEX 8.8 DEL M8X40
22	420781	1	BOLT HEX 8.8 DEL M8X50
23	421002	1	BOLT HEX 8.8 DEL M10X30 FT DIN933
24	421046	1	BOLT HEX M8X25/25 A2 SS DIN933
25	430917	1	SCREW M20X90
26	430924	1	BOLT HEX 8.8 DEL M12 X 85
27	440673	1	SCREW F.PLASTIC 5X12 SS
28	460143	1	LOCK NUT M8 SST A2 DIN985
29	460261	1	NUT HEX M6X1.00 LOCK DIN985 A2 SS
30	460386	1	NUT HEX M12X1.75
31	460423	1	NUT HEX M10X1.50 LOCK DIN985A2 SS
32	460703	1	NUT HEX M12X1.75 LOCK DIN985A2 SS
33	460806	1	NUT HEX M20X2.50 LOCK DIN985A2 SS
34	461200	1	NUT HEX M20X1.5 JAMB.
35	471122	1	WASHER, M10, Ø20/10.5X 2.0, SS
36	471125	1	WASHER M6U 6.4X14X1.2,A2 SS
37	471126	1	WASHER, M8, Ø16/ 8.4X 1.6, SS
38	471127	1	WASHER, M12, Ø24/13X24X2.5 SS
39	471129	1	WASHER, M20, Ø37/21.0X 3.0, SS
40	471140	1	WASHER D30/D10.5X2.5 STAINLESS
41	471180	1	LOCK WASHER NORDLOCK M20 ELZ
42	480728	1	PIN D3.2X20 SPLIT
43	615788	1	BRACKET
44	615808	1	ANCHOR ADJ.F.ACTUATOR
45	637850	1	BKT AIR SLOT RH
45	637851	1	BKT AIR SLOT LH
46	14049500	1	AIR PROFILE L=2755 W. D25 R.
47	15133700	1	BUSHING Ø16.0 X1.5 L=54
48	16158200	1	TARNSPORT BRACKET HOOK HAZ
49	16171100	1	TRANSPORT SLIDE BRACKET HAZ
50	16195700	1	SUPPORT F.OUTER WING 118' HAZ
51	16205500	1	BRACKET 173326 PAINTED
52	16455700	1	MOUNT.PL. F.BREAK-AWAY HOLDER
53	16469000	1	PROTECTION SHIELD, 120' HAZ
54	16495400	1	PLATE 8.0X280X316 6XØ8.5
55	19490000	1	CHAIN Ø6X42MM L=500 12 LINKS RED
56	22098100	1	PL. SPRING Ø42/7.5 L=405 PAINTED
57	26047400	1	ACTUATOR 0-130MM L=0,5M/4WIREAMP
58	28170000	1	ALU OUTERWING 120' HAZ R.

HAZ 3.1 120' TF BOOM 2 FOLD OUTER
D1220-HIN, 31:01:18

Date 12.08.2020 11:38

Pos.	parts-n°	order qty	description
58	28170100	1	ALU OUTERWING 120' HAZ L.
59	28170500	1	ALU BREAK-AWAY 120' SPRING R.
59	28170600	1	ALU BREAK-AWAY 120' SPRING L.
60	39141200	1	PLASTIC TRUSS D30/16.5 L=52
61	43052304	1	BOLT 1"X6" HEX UNC DIN931
62	45002100	1	SCREW M6X20 W.SQ.HEAD SS
63	46001704	1	NUT NYLOCK 1" UNC
64	47001904	1	WASHER NORDLOCK Ø1"
65	48082000	1	RIVET Ø4.8X12.7/ALU/ST
66	61043300	1	TRANS PORT TUBE UPRIGHT HAZ
67	61082300	1	BREAK-AWAY BRAC. SPRING HAZ R.
67	61082400	1	BREAK-AWAY BRAC. SPRING HAZ L.
68	61101900	1	SET SCREW F. BREAKAWAY
69	61106700	1	BREAK-AWAY SUPPORT HAZ 3.1
70	61106800	1	BREAK-AWAY SUPPORT HAZ 3.1

	Agroparts: www.HARDI-INTERNATIONAL.com	
HARDI	ALPHA EVO LIFT ADAPTER 120' HAZ 3.1 D1230-HIN, 01:02:18	Page 0 Date 12.08.2020 11:38

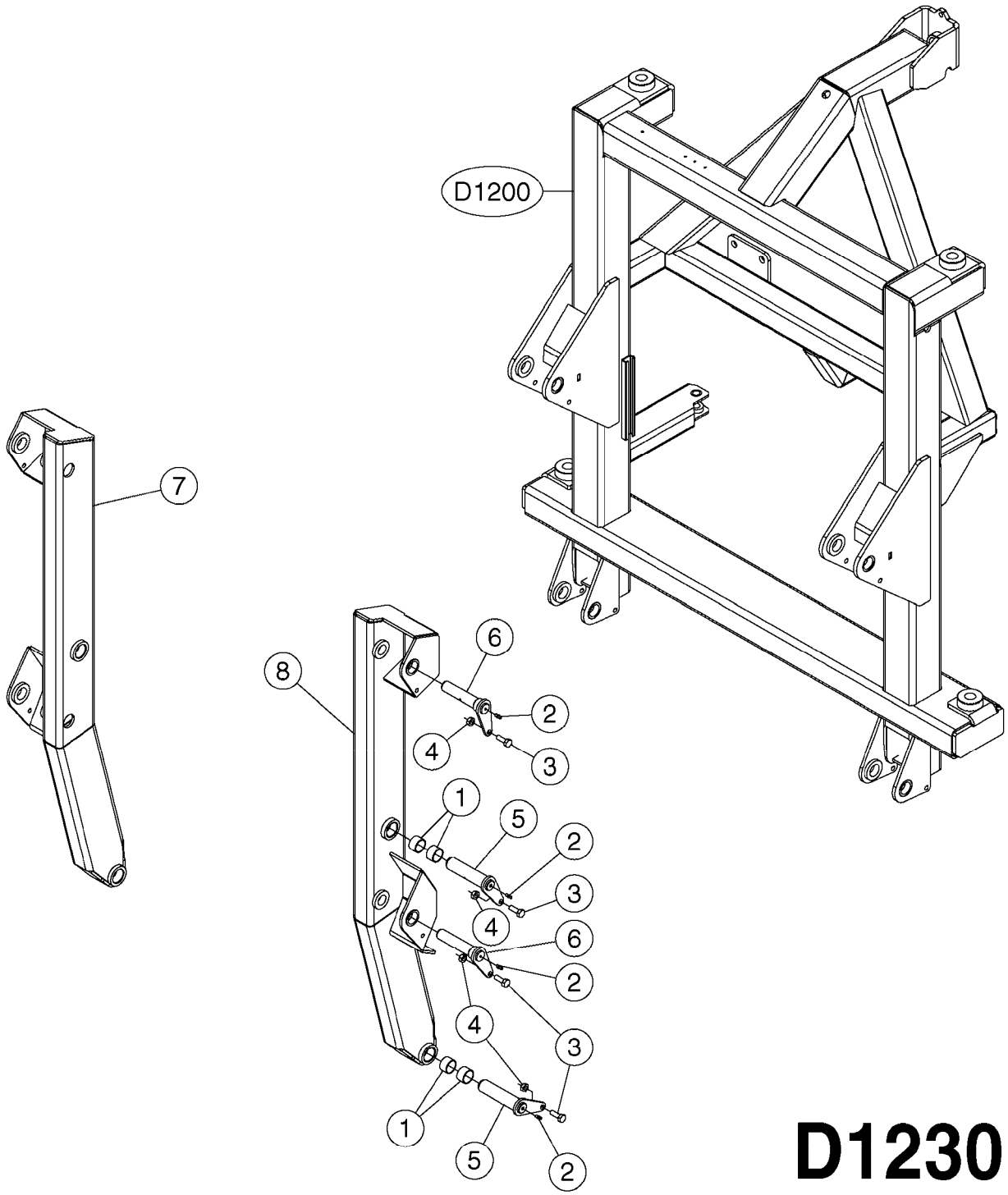

D1230

Agroparts: www.HARDI-INTERNATIONAL.com

ALPHA EVO LIFT ADAPTER 120'
HAZ 3.1
D1230-HIN, 01:02:18

Date 12.08.2020 11:38

Pos.	parts-nº	order qty	description
1	210858	1	BUSHING 034/30 L=20
2	283699	1	GREASE NIPPLE M6X1
3	421002	1	BOLT HEX 8.8 DEL M10X30 FT DIN933
4	460423	1	NUT HEX M10X1.50 LOCK DIN985A2 SS
5	61061300	1	PIN, Ø30 L=122
6	61061500	1	PIN Ø30/25 L=122
7	63149300	1	LIFTFRAME ADAPTER ALPHA R, RED
8	63149500	1	LIFTFRAME ADAPTER ALPHA L, RED

SPC BOOM CENTER TRACK 2017
D1240-HIN, 26:09:19

Date 12.08.2020 11:38

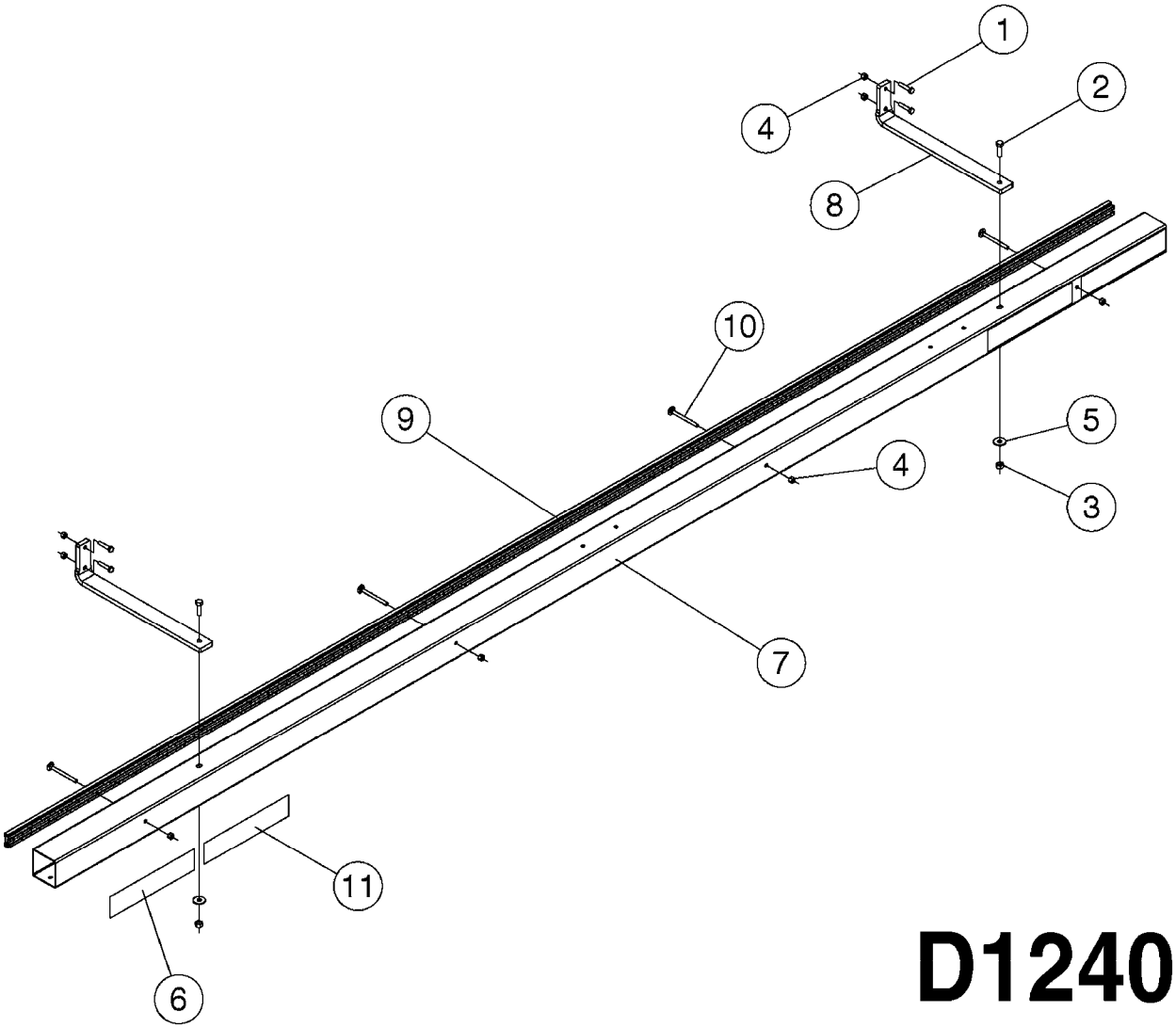

D1240

Agroparts: www.HARDI-INTERNATIONAL.com

SPC BOOM CENTER TRACK 2017
D1240-HIN, 26:09:19

Date 12.08.2020 11:38

Pos.	parts-nº	order qty	description
1	410686	1	BOLT HEX 8.8 DEL M6X30
2	421046	1	BOLT HEX M8X25/25 A2 SS DIN933
3	460143	1	LOCK NUT M8 SST A2 DIN985
4	460261	1	NUT HEX M6X1.00 LOCK DIN985 A2 SS
5	471132	1	WASHER D24/D8.4 X 2 SS
6	10533803	1	DECAL REFLECTIVE RED 50X230
7	15061703	1	CENTER TRACK, SPC, 2017, RED
8	16239603	1	BUMPER MT BRKT, SPC, 2017, RED
9	19489800	1	ALUPROFILE 30X10 L=3.00 M
10	44074700	1	BOLT, CARRIAGE, M6X80 DIN603 SS
11	97619903	1	DECAL FLUORESCENT ORANGE 50X230