Section E

Tanks / Frames: Field Sprayers

main group	page-n°	date	description
Tank and Frame: Field Sprayers			
	E0010-HIN	02:01:18	TANK - NL 80/105 (POST 92)
	E0020-HIN	01:01:16	TANK - NL 155 (POST 92)
	E0030-HIN	01:01:16	TANK - NL 210 (POST 92)
	E0040-HIN	02:01:18	TANK - NK 105 (POST 92)
	E0050-HIN	01:01:16	TANK - NK 155 (POST 92)
	E0060-HIN	01:01:16	TANK - NK 210 (POST 92)
	E0070-HIN	11:03:19	FRAME - N-SERIES 105
	E0080-HIN	01:01:16	FRAME - N-SERIES 155/210
	E0090-HIN	01:01:16	TANK MEGA 230/350 CENTRIFUGAL
	E0100-HIN	01:01:16	TANK MEGA 230/350 DIAPHRAGM
	E0110-HIN	01:01:16	FRAME MEGA 230/350
	E0120-HIN	01:01:16	FRAME - DELTA 3PT
	E0130-HIN	01:01:16	TANK - FRONT TANK 250/350
	E0140-HIN	01:01:16	FRAME FRONT TANK 250/350
	E0150-HIN	01:01:16	TANK - ESC 300/500
	E0160-HIN	01:01:16	TANK - TL/TR 300/500 W/BK 180
	E0170-HIN	01:01:16	TANK TR 300/500 W/EC (PRE 93)
	E0180-HIN	01:01:16	TANK TR 300/500 W/EC (POST 93)
	E0190-HIN	01:01:16	FRAME TL/ESC/TR 300 SA
	E0200-HIN	01:01:16	FRAME TL/ESC/TR 500 SA
	E0210-HIN	01:01:16	FRAME 500 TA
	E0220-HIN	01:01:16	FRAME HC 500
	E0230-HIN	01:01:16	TANK PASTURE 300/550
	E0240-HIN	01:01:16	FRAME PASTURE SPRAYER 300/550
	E0250-HIN	01:01:16	TANK 550 NAV/NAV-M CENTRIFUGAL
	E0260-HIN	01:01:16	TANK 550 NAV & NAV-M DIAPHRAGM
	E0270-HIN	11:05:18	FRAME NAVIGATOR HC 550
	E0280-HIN	01:01:16	FRAME NAVIGATOR STA 550
	E0290-HIN	11:05:18	FRAME - NAVIGATOR M HC 550
	E0300-HIN	01:01:16	FRAME NAVIGATOR M STA 550
	E0310-HIN	01:01:16	TANK - RANGER 2200 (PRE '08)
	E0320-HIN	01:01:16	SEVERE TERRAIN LID CONV. KIT
	E0330-HIN	01:01:16	TANK - RANGER 2200 (POST '08)
	E0340-HIN	01:01:16	TANK - RANGER 550
	E0350-HIN	05:12:19	TANK - RANGER 2000
	E0360-HIN	01:01:16	FRAME - RANGER 2200
	E0370-HIN	29:08:19	PARALIFT - RANGER
	E0380-HIN	07:01:20	FRAME - RANGER 550
	E0390-HIN	07:01:20	FRAME - RANGER 2000
	E0400-HIN	01:01:16	TANK HC650M 650 TWIN (POST 95)
	E0410-HIN	01:01:16	FRAME HC 650M/TWIN 650 POST 94
	E0420-HIN	01:01:16	TANK - CM750
	E0430-HIN	23:08:18	TANK - CM+750
	E0440-HIN	01:01:16	FRAME CM 750
	E0450-HIN	01:01:16	FRAME - CM+750
	E0460-HIN	01:01:16	TANK-800/1000 NAV&NAV M-CENT.
	E0470-HIN	01:01:16	TANK-800/1000 NAV&NAV M-DIAPH.
	E0480-HIN	01:01:16	FRAME TR 800/1000 TA
	E0490-HIN	01:01:16	FRAME HC 800/1000 SA
	E0500-HIN	15:08:16	FRAME - NAVIGATOR HC 800/1000
	E0510-HIN	01:01:16	FRAME-NAV.M HC800/1000 PRE'05
	E0520-HIN	15:08:16	FRAME-NAV.M HC800/1000 POST'05
	E0530-HIN	01:01:16	FRAME - NAVIGATOR TA 800/1000
	E0540-HIN	01:01:16	FRAME-NAV.M TA800/1000 PRE'05
	E0550-HIN	15:08:16	FRAME-NAV.M TA800/1000 POST'05
	E0560-HIN	23:08:18	TANK - 575/1100 NEW NAV ECP
	E0570-HIN	23:08:18	TANK - 575/1100 NEW NAV ECPC

main group	page-n°	date	description
	E0580-HIN	01:01:16	FRAME "NEW" NAV 575
	E0590-HIN	01:01:16	FIXED AXLE "NEW" NAV 575
	E0600-HIN	01:01:16	FRAME - NEW NAVIGATOR 1100
	E0610-HIN	01:01:16	"NEW" NAVIGATOR SUSPENDED AXLE
	E0620-HIN	01:01:16	TANK-HC 950M/950 TWIN(POST 95)
	E0630-HIN	01:01:16	FRAME - HC 950M/TWIN 950
	E0640-HIN	01:01:16	TANK - CM 875/1200
	E0650-HIN	23:08:18	TANK - CM+1200, CM1500
	E0660-HIN	01:01:16	FRAME - CM 875/1200
	E0670-HIN	01:01:16	FRAME - CM+1200
	E0680-HIN	01:01:16	DRAWBAR - CM+750/1200
	E0690-HIN	01:01:16	FRAME CM 1500
	E0700-HIN	01:01:16	COMMANDER SUSPENDED AXLE
	E0710-HIN	01:01:16	HUB ASSEMBLY F.1-1/4" SPINDLE
	E0720-HIN	11:09:17	HUB ASSEMBLY F.1-3/4" SPINDLE
	E0730-HIN	01:01:16	HUB ASSEMBLY F.2 1/8" SPINDLE
	E0740-HIN	09:10:19	HUB ASSEMBLY F.2 3/4" SPINDLE
	E0750-HIN	01:01:16	HUB ASSY F. 3" SPINDLE CM750
	E0760-HIN	01:01:16	HUB ASSY 3" SPINDLE NAV 575
	E0770-HIN	01:01:16	HUB ASSEMBLY F.3-1/8" SPINDLE
	E0780-HIN	01:01:16	HUB ASSEMBLY F.3-1/2" SPINDLE
	E0790-HIN	06:07:17	HUB ASSEMBLY F.4-1/2" SPINDLE
	E0800-HIN	01:01:16	CAMOPLAST TRACK 30 SERIES
	E0810-HIN	01:01:16	CAMOPLAST TRACK 40 SERIES
	E0815-HIN	21:08:19	CAMOPLAST SPEED SENSOR
	E0820-HIN	01:01:16	CAMOPLAST FRAME 30 SERIES
	E0830-HIN	01:01:16	CAMOPLAST FRAME 40 SERIES
	E0840-HIN	01:01:16	CAMOPLAST TENSION LINK ASSY.
	E0850-HIN	01:01:16	CAMOPLAST TENSIONER ASSEMBLY
	E0860-HIN	01:01:16	CAMOPLAST ALIGNMENT ASSEMBLY
	E0870-HIN	01:01:16	CAMOPLAST BOGIE MID-ROLLER 30
	E0880-HIN	01:01:16	CAMOPLAST BOGIE MID-ROLLER 40
	E0890-HIN	01:01:16	CAMOPLAST HUB ASSEMBLY - IDLER
	E0900-HIN	01:01:16	CAMOPLAST HUB ASSY. MID-ROLLER
	E0910-HIN	21:06:18	TANK - NAVIGATOR 3000/4000
	E0915-HIN	10:08:18	TANK - NAVIGATOR 4500/6200
	E0920-HIN	01:01:16	LOCKER & CLEAN WATER TANK NAV
	E0930-HIN	12:07:17	FRAME-NAVIGATOR 3000/3500/4000
	E0935-HIN	06:07:17	FRAME-NAVIGATOR 6000
	E0940-HIN	01:07:20	NAVIGATOR SUSPENSION AND AXLES
	E0950-HIN	01:01:16	NAV. ADJUSTABLE AXLE 60"-120"
	E0955-HIN	07:07:17	NAVIGATOR 6200 AXLES
	E0960-HIN	01:01:16	NAVIGATOR 3000/4000 PLATFORM
	E0965-HIN	09:06:20	NAVIGATOR DF4 PLATFORM
	E0970-HIN	09:08:18	NAVIGATOR 3000/4000 PARALIFT
	E0975-HIN	26:07:17	NAVIGATOR HEAVY PUSH PARALIFT
	E0980-HIN	01:01:16	TANK NCM 4400/6600/9000
	E0990-HIN	15:05:19	LOCKER & CLEAN WATER TANK NCM
	E1000-HIN	01:01:16	SHIELDS NCM 4400/6600/9000
	E1010-HIN	20:01:20	FRAME - NCM 4400/6600
	E1020-HIN	17:11:16	SWIVEL HOSE GUARD
	E1030-HIN	07:02:19	HYD. DRAWBAR - NCM 6600
	E1040-HIN	09:09:16	FRAME - REAR W/PARALIFT NCM
	E1050-HIN	01:01:16	COMMANDER 4400-7000 NON-SUSPEND.AXLE
	E1060-HIN	02:04:19	COMMANDER 4400-7000 SUSPENDED AXLE
	E1070-HIN	01:01:16	WHEELS FOR NEW COMMANDER
	E1080-HIN	31:03:16	DRAWBAR - NCM 9000
	E1090-HIN	01:01:16	FRAME - NCM 9000

main group	page-n°	date	description
	E1100-HIN	01:01:16	PARALIFT - NCM 9000
	E1110-HIN	25:02:19	NCM 9000 SUSPENDED AXLE
	E1120-HIN	17:07:19	TANK - SARITOR 4000/5000
	E1130-HIN	22:06:16	PRESIDIO MUDGUARDS
	E1140-HIN	23:06:16	PRESIDIO PARALIFT
	E1150-HIN	30:06:20	PRESIDIO RINSE TANK FRAME
	E1160-HIN	10:01:18	PRESIDIO PLATFORM
	E1170-HIN	03:08:16	PRESIDIO FUEL TANK ASSEMBLY
	E1180-HIN	22:08:17	PRESIDIO SIDE LADDER
	E1190-HIN	23:08:18	PRESIDIO MAIN TANK
	E1200-HIN	07:02:19	HYD. DRAWBAR CM5500/7000
	E1210-HIN	08:02:19	FRAME - CM45/55/7000
	E1220-HIN	26:07:17	FRAME - REAR W/PARALIFT CM45/55/7000
	E1230-HIN	09:01:17	FRAME - ALPHA EVO ECODRIVE
	E1240-HIN	09:01:17	FRAME - RIVETED ALPHA EVO ECODRIVE
	E1250-HIN	15:05:17	RINSE/CLEAN WATER TANKS - ALPHA
	E1260-HIN	31:01:17	LOCKER & CLEAN WATER TANK CM45/55/7000
	E1270-HIN	06:02:17	WHEELS FOR ALPHA
	E1280-HIN	26:04:17	MECH. TANK GAUGE CM4500/5500/7000
	E1290-HIN	16:08:17	AGITATION TUBE
	E1300-HIN	13:03:18	PRESIDIO VARIABLE TRACK
	E1310-HIN	24:05:18	TANK - RUBICON 9000
	E1320-HIN	09:07:18	WHEELS FOR RUBICON
	E1330-HIN	14:08:18	PLATFORM/FUEL TANK - RUBICON
	E1340-HIN	14:08:18	PLATFORM, REAR - RUBICON
	E1350-HIN	13:08:18	REAR TRAFFIC LIGHTS - RUBICON
	E1360-HIN	15:08:18	BOOM SUPPORT - RUBICON
	E1370-HIN	20:08:18	PLATFORM LADDER LEFT - RUBICON
	E1380-HIN	20:08:18	PLATFORM LADDER RIGHT - RUBICON
	E1390-HIN	02:07:19	WHEELS FOR CM8500/10000
	E1400-HIN	17:07:19	SARITOR TANK FRAME
	E1410-HIN	17:06:20	COMMANDER 8500/10000 TANK

TANK - NL 80/105 (POST 92)
E0010-HIN, 02:01:18

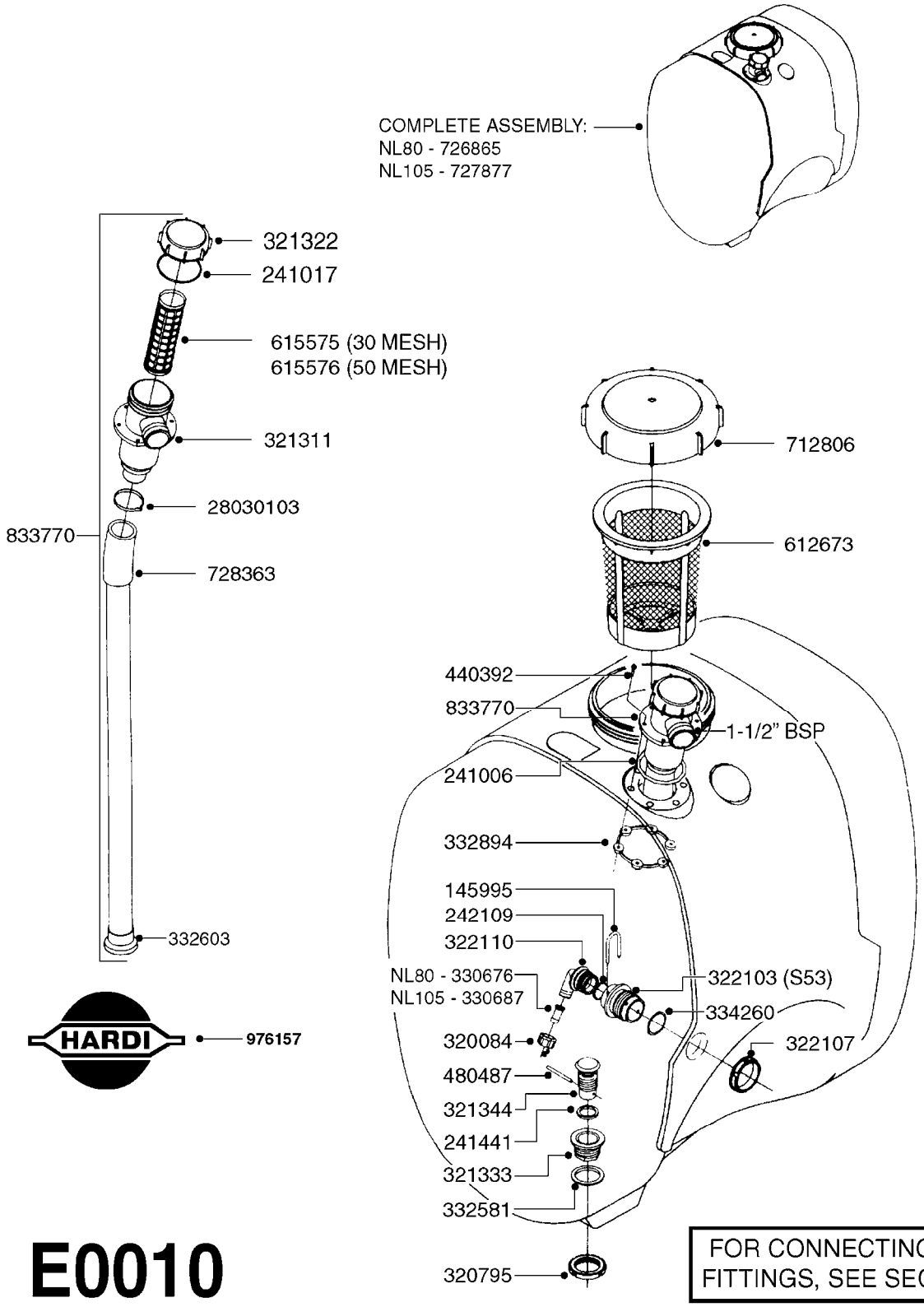

E0010

FOR CONNECTING HOSE FITTINGS, SEE SECTION L

Agroparts: www.HARDI-INTERNATIONAL.com

TANK - NL 80/105 (POST 92)
E0010-HIN, 02:01:18

Date 12.08.2020 11:38

parts-n°	order qty	description
145995	1	FITT.DK S-53 FORK
241006	1	O-RING D79,2X5,7 NITRIL
241017	1	O-RING D74,5X3 NITRIL
241441	1	O-RING D29.3X3
242109	1	O-RING D32.2x3.0
320084	1	FITT.DK NUT 1/2" BSP
320795	1	FITT.DK NUT 1-1/2" BSP JAMB
321311	1	FILTER BODY S 80 X 4
321322	1	SCREW CAP F. S80 X 4
321333	1	FITT.DK BULK 1-1/2" X 1"F BSP
321344	1	DRAIN SCREW 1" BSP RED
322103	1	FITT.DK S-53 BULKHEAD
322107	1	FITT.DK S-53 BULKHEAD NUT
322110	1	FITT.DK S-53 ELB. 1/2" BSP
330676	1	FITT.DK HB 3/8" F. 1/2" NUT
330687	1	FITT.DK HB 1/2" F. 1/2" NUT
332581	1	GASKET F. 1-1/2" BSP CAPNUT.
332603	1	CAP F. SUCTION TUBE
332894	1	RETAIN.RING FOR SUCTION FILTER
334260	1	GASKET F. S-53 BULKHEAD
440392	1	SCREW 6.3 X 25.0 DIN7981C TORX
480487	1	PIN M5X60 SLOTTED GALV
612673	1	FILTER BASKET F. ES30/ES53
615575	1	FILTER F.TOP SUCT.30 MESH GRN.
615576	1	FILTER F.TOP SUCT.50 MESH BLUE
712806	1	TANK LID WITH VENT S226 RED
726865	1	TANK NL 80
727877	1	TANK W/O FRAME N105
728363	1	SUCTION TUBE ASSY.L=72"
833770	1	TOP SUCTION KIT 300/500
976157	1	DECAL COMPANY (4.4" X 4.6")
28030103	1	CLAMP HOSE GEAR P5/4-S1.5"6724

TANK - NL 155 (POST 92)
E0020-HIN, 01:01:16

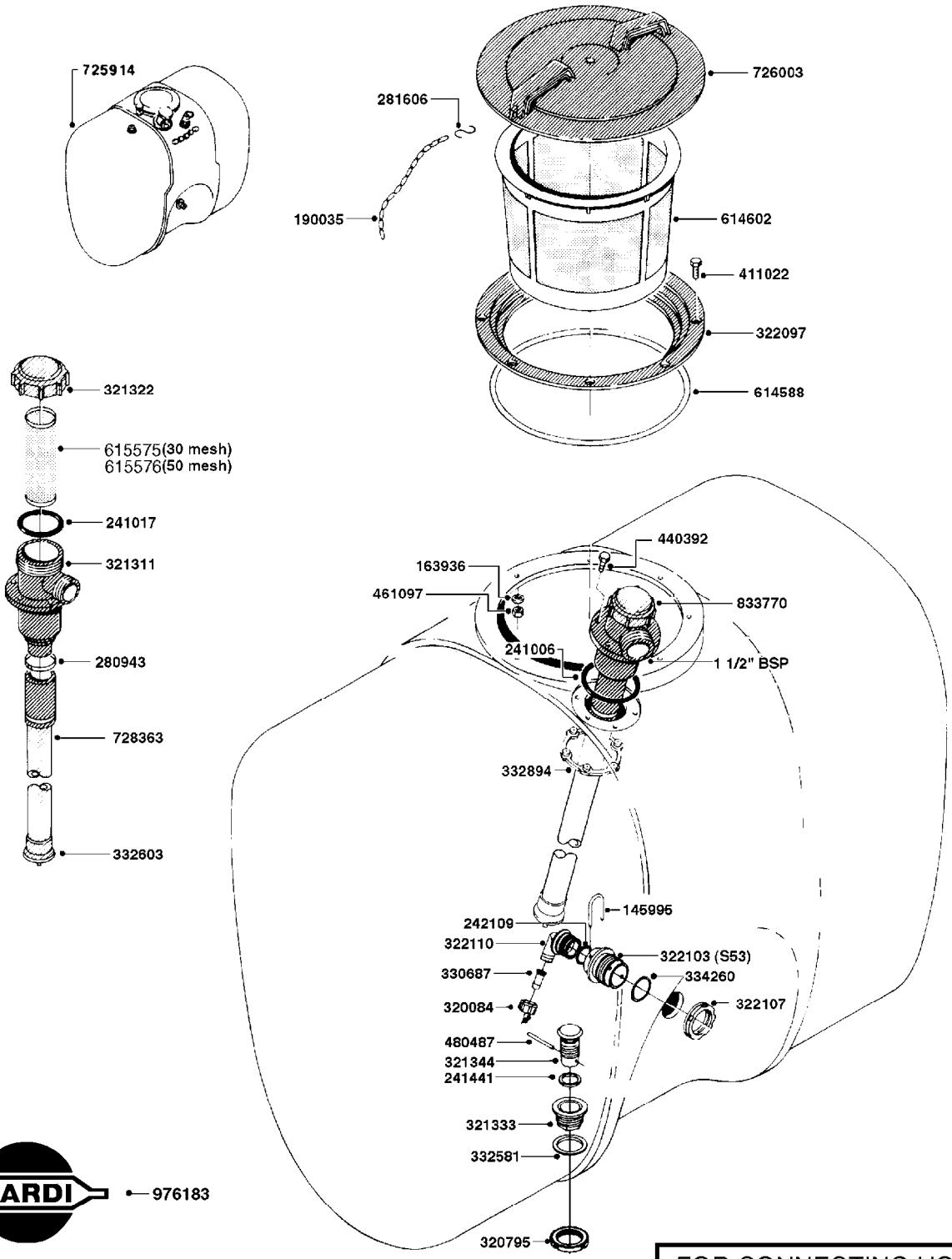

E0020

FOR CONNECTING HOSE FITTINGS, SEE SECTION L

Agroparts: www.HARDI-INTERNATIONAL.com

TANK - NL 155 (POST 92)
E0020-HIN, 01:01:16

Date 12.08.2020 11:38

parts-n°	order qty	description
145995	1	FITT.DK S-53 FORK
163936	1	WASHER D15/D6.2X1
190035	1	CHAIN 365MM
241006	1	O-RING D79,2X5,7 NITRIL
241017	1	O-RING D74,5X3 NITRIL
241441	1	O-RING D29.3X3
242109	1	O-RING D32.2x3.0
280943	1	CLAMP HOSE GEAR 40-60
281606	1	S-HOOK GALVANIZED
320084	1	FITT.DK NUT 1/2" BSP
320795	1	FITT.DK NUT 1-1/2" BSP JAMB
321311	1	FILTER BODY S 80 X 4
321322	1	SCREW CAP F. S80 X 4
321333	1	FITT.DK BULK 1-1/2" X 1"F BSP
321344	1	DRAIN SCREW 1" BSP RED
322097	1	THREADED RING F. LID
322103	1	FITT.DK S-53 BULKHEAD
322107	1	FITT.DK S-53 BULKHEAD NUT
322110	1	FITT.DK S-53 ELB. 1/2" BSP
330687	1	FITT.DK HB 1/2" F. 1/2" NUT
332581	1	GASKET F. 1-1/2" BSP CAPNUT.
332603	1	CAP F. SUCTION TUBE
332894	1	RETAIN.RING FOR SUCTION FILTER
334260	1	GASKET F. S-53 BULKHEAD
411022	1	SCREW M.6X30 STAINLESS PHILLIP
440392	1	SCREW 6.3 X 25.0 DIN7981C TORX
461097	1	NUT M6 STAINLESS SAFETY
480487	1	PIN M5X60 SLOTTED GALV
614588	1	SEAL F. LID
614602	1	FILTER BASKET
615575	1	FILTER F.TOP SUCT.30 MESH GRN.
615576	1	FILTER F.TOP SUCT.50 MESH BLUE
725914	1	TANK ASSY.COMPLETE NK 155 '92
726003	1	LID F. TANK
728363	1	SUCTION TUBE ASSY.L=72"
833770	1	TOP SUCTION KIT 300/500
976183	1	DECAL COMPANY D.18,2 X 29,6

TANK - NL 210 (POST 92)
E0030-HIN, 01:01:16

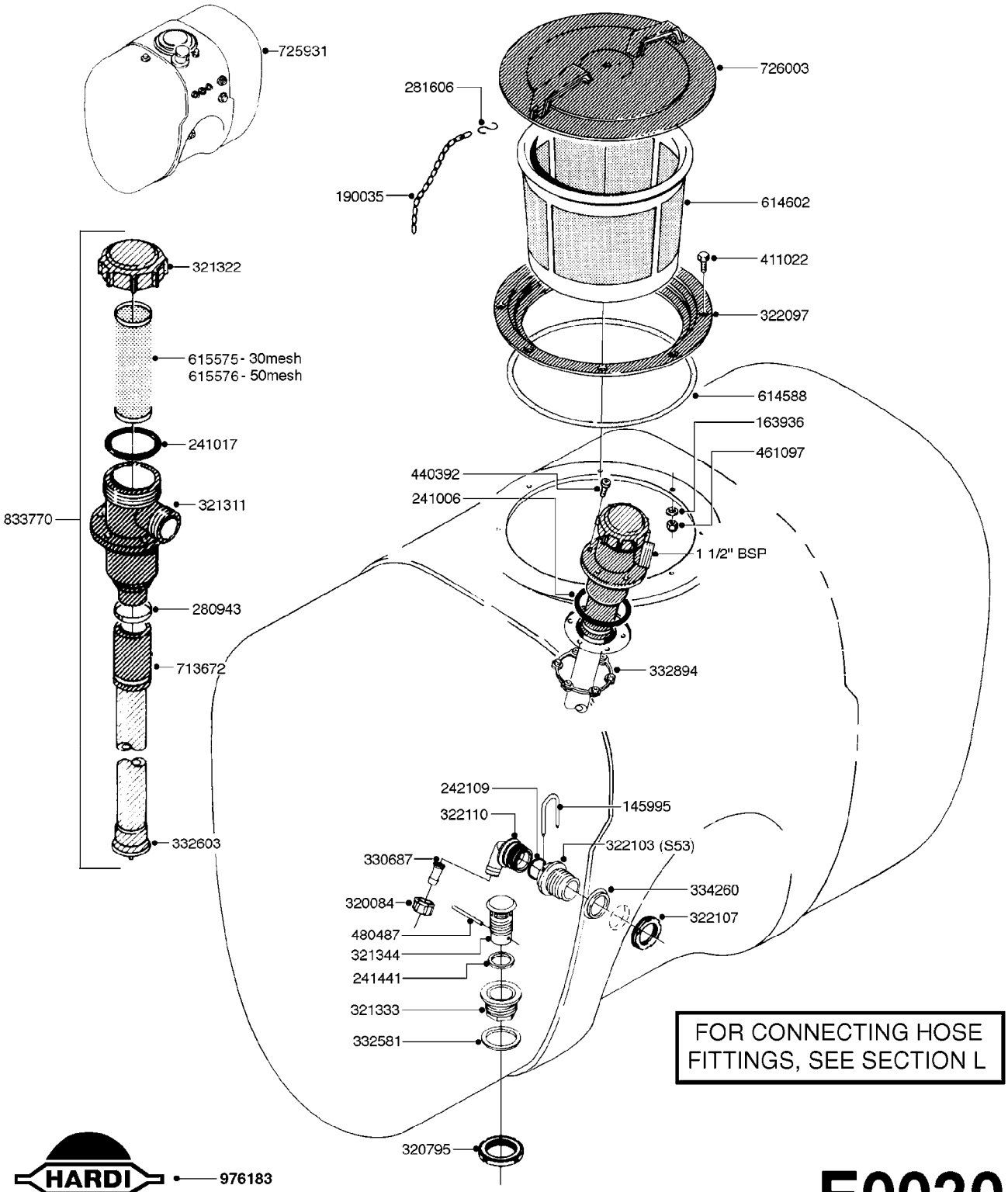

FOR CONNECTING HOSE FITTINGS, SEE SECTION L

976183

E0030

Agroparts: www.HARDI-INTERNATIONAL.com

TANK - NL 210 (POST 92)
E0030-HIN, 01:01:16

Date 12.08.2020 11:38

parts-n°	order qty	description
145995	1	FITT.DK S-53 FORK
163936	1	WASHER D15/D6.2X1
190035	1	CHAIN 365MM
241006	1	O-RING D79,2X5,7 NITRIL
241017	1	O-RING D74,5X3 NITRIL
241441	1	O-RING D29.3X3
242109	1	O-RING D32.2x3.0
280943	1	CLAMP HOSE GEAR 40-60
281606	1	S-HOOK GALVANIZED
320084	1	FITT.DK NUT 1/2" BSP
320795	1	FITT.DK NUT 1-1/2" BSP JAMB
321311	1	FILTER BODY S 80 X 4
321322	1	SCREW CAP F. S80 X 4
321333	1	FITT.DK BULK 1-1/2" X 1"F BSP
321344	1	DRAIN SCREW 1" BSP RED
322097	1	THREADED RING F. LID
322103	1	FITT.DK S-53 BULKHEAD
322107	1	FITT.DK S-53 BULKHEAD NUT
322110	1	FITT.DK S-53 ELB. 1/2" BSP
330687	1	FITT.DK HB 1/2" F. 1/2" NUT
332581	1	GASKET F. 1-1/2" BSP CAPNUT.
332603	1	CAP F. SUCTION TUBE
332894	1	RETAIN.RING FOR SUCTION FILTER
334260	1	GASKET F. S-53 BULKHEAD
411022	1	SCREW M.6X30 STAINLESS PHILLIP
440392	1	SCREW 6.3 X 25.0 DIN7981C TORX
461097	1	NUT M6 STAINLESS SAFETY
480487	1	PIN M5X60 SLOTTED GALV
614588	1	SEAL F. LID
614602	1	FILTER BASKET
615575	1	FILTER F.TOP SUCT.30 MESH GRN.
615576	1	FILTER F.TOP SUCT.50 MESH BLUE
713672	1	SUCTION TUBE L=44"
725931	1	TANK ASSY.COMPLETE NL 210 '88
726003	1	LID F. TANK
833770	1	TOP SUCTION KIT 300/500
976183	1	DECAL COMPANY D.18,2 X 29,6

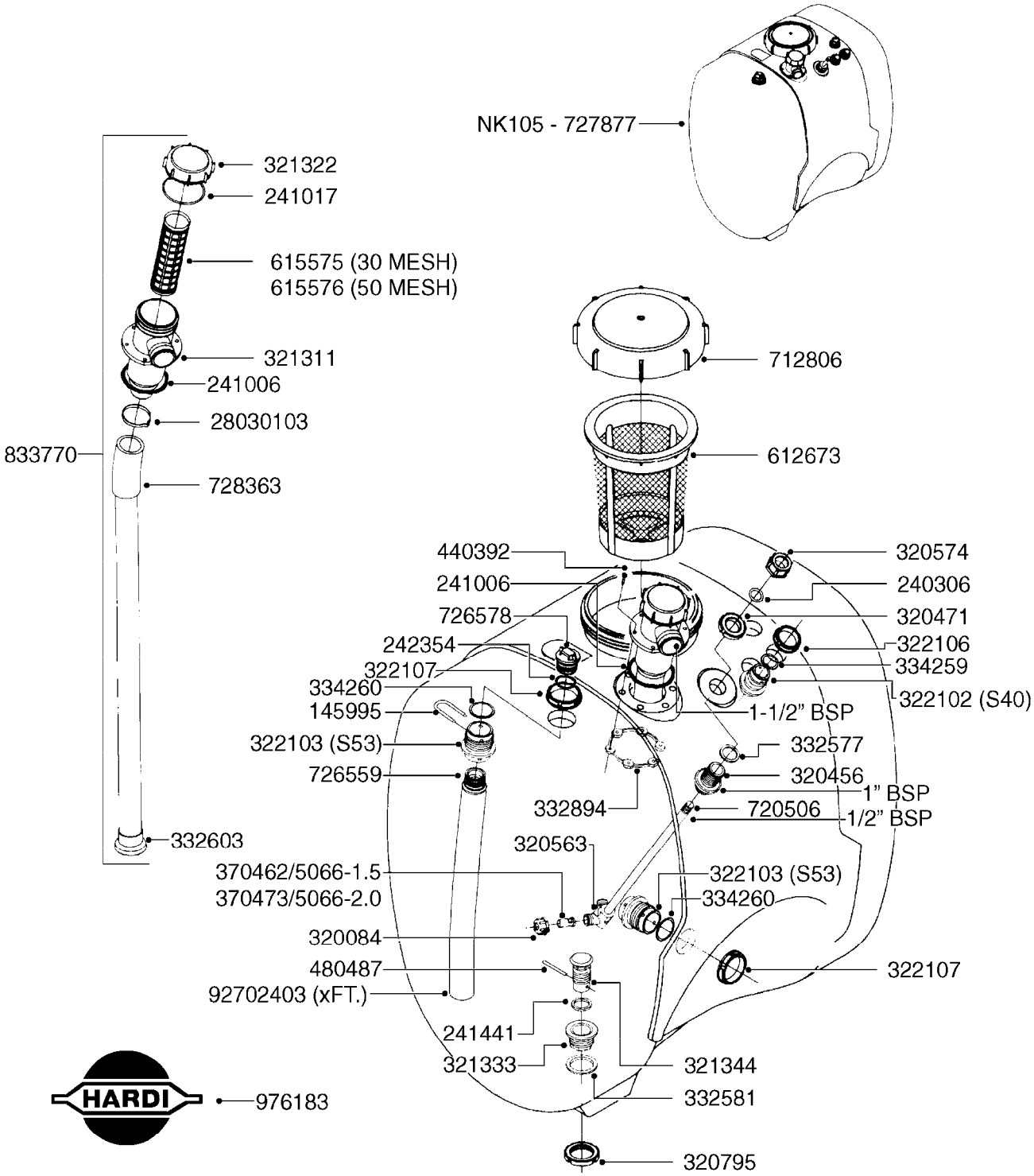

FOR CONNECTING HOSE FITTINGS, SEE SECTION L

E0040

Agroparts: www.HARDI-INTERNATIONAL.com

TANK - NK 105 (POST 92)
E0040-HIN, 02:01:18

Date 12.08.2020 11:38

parts-n°	order qty	description
145995	1	FITT.DK S-53 FORK
240306	1	O-RING D29/D21X4
241006	1	O-RING D79,2X5,7 NITRIL
241017	1	O-RING D74,5X3 NITRIL
241441	1	O-RING D29.3X3
242354	1	O-RING D32.2X3.0 VITON
320084	1	FITT.DK NUT 1/2" BSP
320456	1	FITT.DK BULKHEAD 1"BSP DOUBLE
320471	1	FITT.DK NUT 1" BSP JAMB
320563	1	FITT.DK 3 WAY 1/2" 110 DEG.
320574	1	FITT.DK NUT 1" BSP SPECIAL
320795	1	FITT.DK NUT 1-1/2" BSP JAMB
321311	1	FILTER BODY S 80 X 4
321322	1	SCREW CAP F. S80 X 4
321333	1	FITT.DK BULK 1-1/2" X 1"F BSP
321344	1	DRAIN SCREW 1" BSP RED
322102	1	FITT.DK S-40 BULKHEAD
322103	1	FITT.DK S-53 BULKHEAD
322106	1	FITT.DK S-40 BULKHEAD NUT
322107	1	FITT.DK S-53 BULKHEAD NUT
332577	1	O-RING D38/D30X4 F.1" PUR.
332581	1	GASKET F. 1-1/2" BSP CAPNUT.
332603	1	CAP F. SUCTION TUBE
332894	1	RETAIN.RING FOR SUCTION FILTER
334259	1	GASKET F. S-40 BULKHEAD
334260	1	GASKET F. S-53 BULKHEAD
370462	1	NOZZLE INJECTOR 5066-1.5
370473	1	NOZZLE INJECTOR 5066-2.0
440392	1	SCREW 6.3 X 25.0 DIN7981C TORX
480487	1	PIN M5X60 SLOTTED GALV
612673	1	FILTER BASKET F. ES30/ES53
615575	1	FILTER F.TOP SUCT.30 MESH GRN.
615576	1	FILTER F.TOP SUCT.50 MESH BLUE
712806	1	TANK LID WITH VENT S226 RED
720506	1	AGITATION TUBE NK 80/105
726559	1	FITT DK. S-53 HB 1" W/O-RING
726578	1	FITT.DK S53 PLUG WITH O-RING
727877	1	TANK W/O FRAME N105
728363	1	SUCTION TUBE ASSY.L=72"
833770	1	TOP SUCTION KIT 300/500
976183	1	DECAL COMPANY D.18,2 X 29,6
28030103	1	CLAMP HOSE GEAR P5/4-S1.5"6724
92702403	1	HOSE PVC SUCT GRAY 1"

TANK - NK 155 (POST 92)
E0050-HIN, 01:01:16

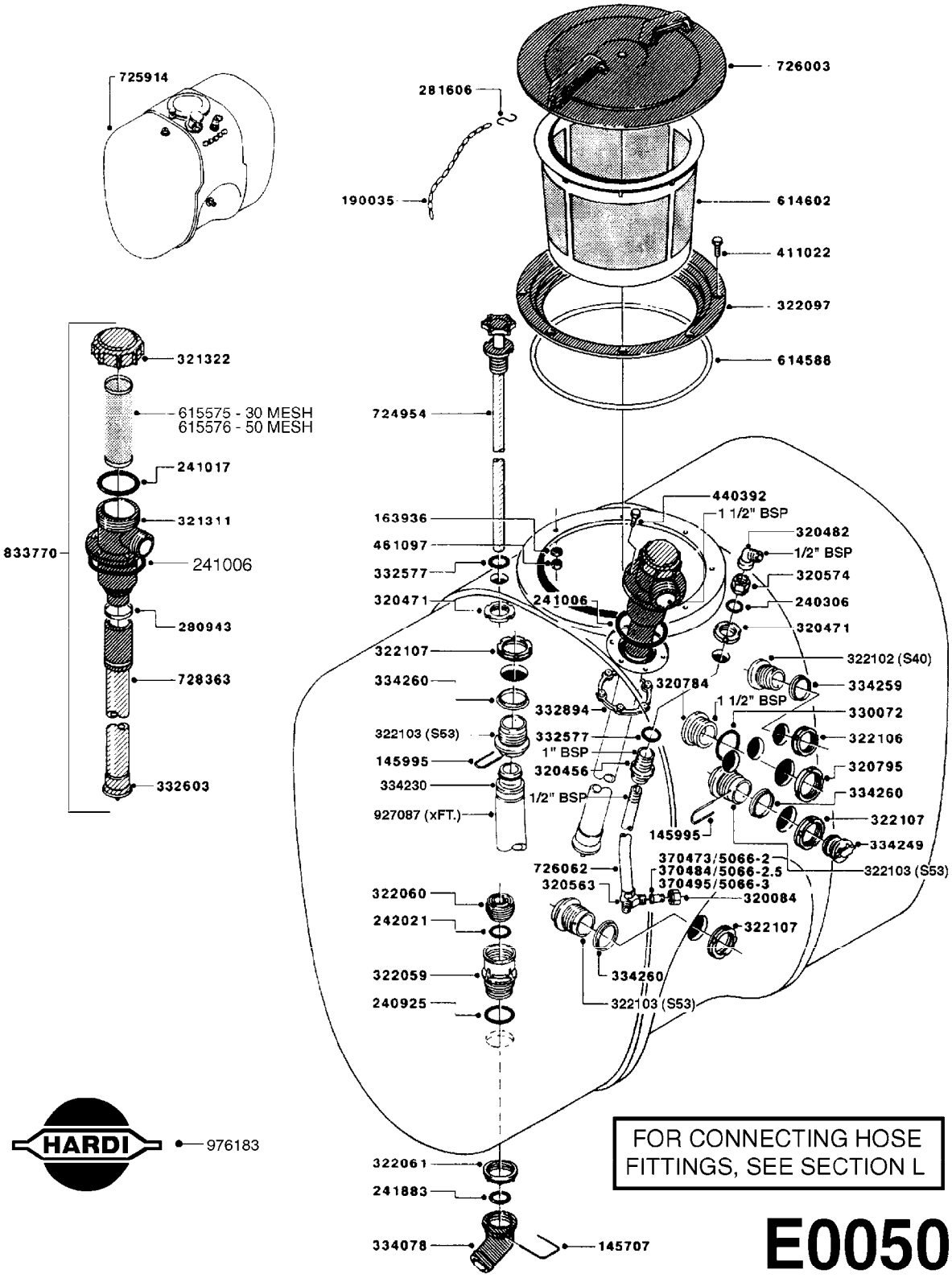

Agroparts: www.HARDI-INTERNATIONAL.com

TANK - NK 155 (POST 92)
E0050-HIN, 01:01:16

Date 12.08.2020 11:38

parts-n°	order qty	description
145707	1	LOCK CLAMP F.BOTTOM DRAIN ASSY
145995	1	FITT.DK S-53 FORK
163936	1	WASHER D15/D6.2X1
190035	1	CHAIN 365MM
240306	1	O-RING D29/D21X4
240925	1	O-RING D49.5X3 NITRIL
241006	1	O-RING D79,2X5,7 NITRIL
241017	1	O-RING D74,5X3 NITRIL
242020	1	O-RING 39.2 X 3 VITON
242021	1	O-RING D.37,69x3,53 VITON
281606	1	S-HOOK GALVANIZED
320084	1	FITT.DK NUT 1/2" BSP
320456	1	FITT.DK BULKHEAD 1"BSP DOUBLE
320471	1	FITT.DK NUT 1" BSP JAMB
320482	1	FITT.DK ELB. 1/2" BSP 60 DEG.
320563	1	FITT.DK 3 WAY 1/2" 110 DEG.
320574	1	FITT.DK NUT 1" BSP SPECIAL
320784	1	FITT.DK CAP 1-1/2" BSP
320795	1	FITT.DK NUT 1-1/2" BSP JAMB
321311	1	FILTER BODY S 80 X 4
321322	1	SCREW CAP F. S80 X 4
322059	1	BULKHEAD FOR BOTTOM VALVE
322060	1	STOPPER FOR BOTTOM VALVE
322061	1	NUT FOR BOTTOM VALVE
322097	1	THREADED RING F. LID
322102	1	FITT.DK S-40 BULKHEAD
322103	1	FITT.DK S-53 BULKHEAD
322106	1	FITT.DK S-40 BULKHEAD NUT
322107	1	FITT.DK S-53 BULKHEAD NUT
330072	1	O-RING D53.5/D45.5X4
332577	1	O-RING D38/D30X4 F.1" PUR.
332603	1	CAP F. SUCTION TUBE
332894	1	RETAIN.RING FOR SUCTION FILTER
334078	1	FITT.DK ELB.F.BOTTOM DRAIN ASY
334230	1	FITT.DK S-53 STR.1"
334249	1	FITT.DK S-53 PLUG
334259	1	GASKET F. S-40 BULKHEAD
334260	1	GASKET F. S-53 BULKHEAD
370473	1	NOZZLE INJECTOR 5066-2.0
370484	1	NOZZLE INJECTOR 5066-2.5
370495	1	NOZZLE INJECTOR 5066-3.0
411022	1	SCREW M.6X30 STAINLESS PHILLIP
440392	1	SCREW 6.3 X 25.0 DIN7981C TORX
461097	1	NUT M6 STAINLESS SAFETY
614588	1	SEAL F. LID
614602	1	FILTER BASKET
615575	1	FILTER F.TOP SUCT.30 MESH GRN.
615576	1	FILTER F.TOP SUCT.50 MESH BLUE
724954	1	BOTTOM VALVE UPPER PART 265GAL
725914	1	TANK ASSY.COMPLETE NK 155 '92
726003	1	LID F. TANK
726062	1	AGITATION TUBE NK155
728363	1	SUCTION TUBE ASSY.L=72"
833770	1	TOP SUCTION KIT 300/500
976183	1	DECAL COMPANY D.18,2 X 29,6
28030103	1	CLAMP HOSE GEAR P5/4-S1.5"6724
92702403	1	HOSE PVC SUCT GRAY 1"

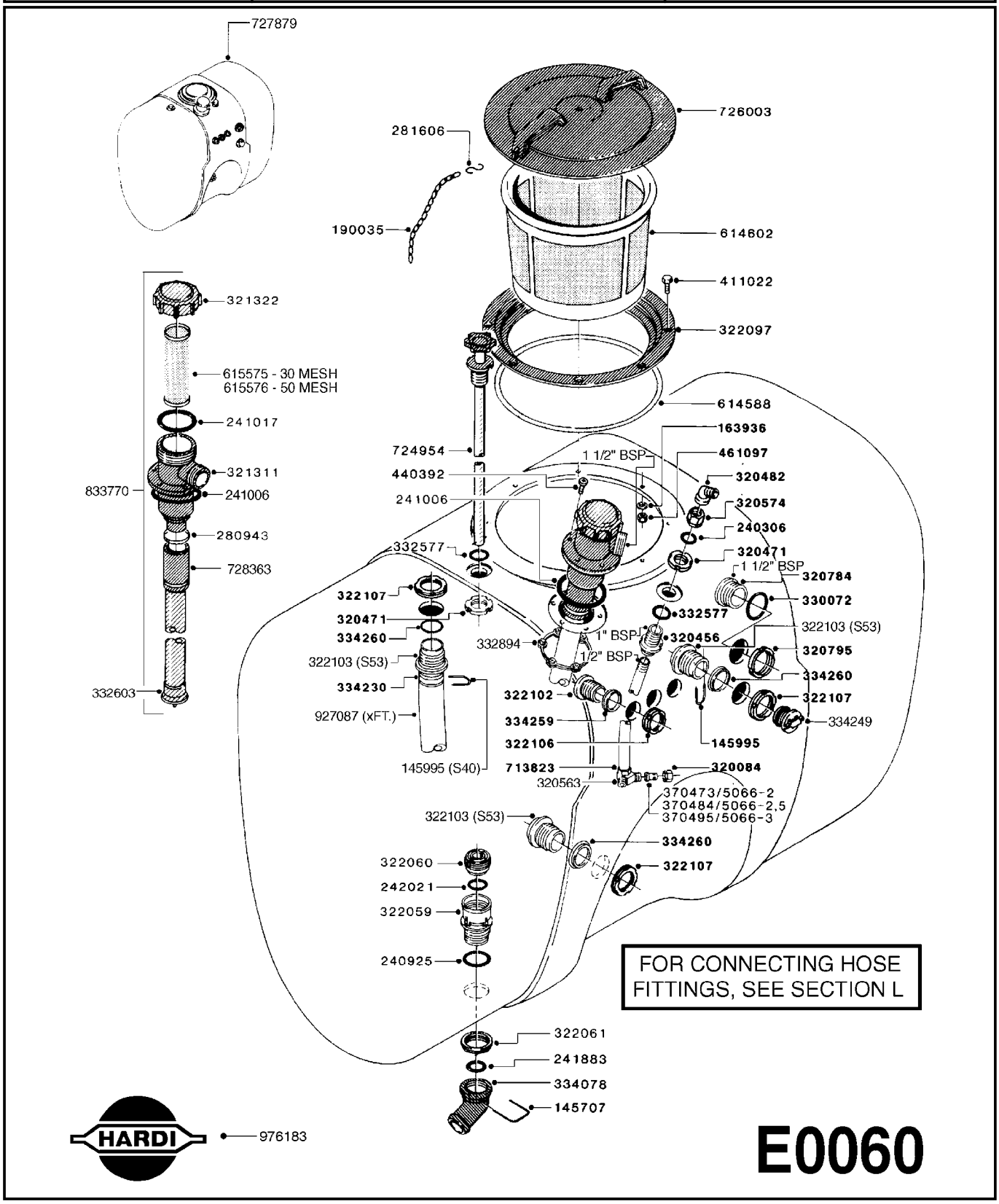
727879
726003
281606
190035
614602
411022
321322
322097
615575 - 30 MESH
615576 - 50 MESH
614588
241017
163936
724954
1 1/2" BSP
461097
321311
440392
320482
833770
241006
241006
320574
240306
280943
332577
320471
728363
1 1/2" BSP
320784
322107
330072
320471
332577
334260
1" BSP
320456
322103 (S53)
332894
320795
322103 (S53)
1/2" BSP
334260
334230
322102
322107
332603
927087 (xFT.)
334259
334249
322106
145995
145995 (S40)
713823
320084
320563
370473/5066-2
370484/5066-2,5
370495/5066-3
322103 (S53)
334260
322060
322107
242021
322059
240925
FOR CONNECTING HOSE
FITTINGS, SEE SECTION L
322061
241883
334078
145707
976183
E0060

Agroparts: www.HARDI-INTERNATIONAL.com

TANK - NK 210 (POST 92)
E0060-HIN, 01:01:16

Date 12.08.2020 11:38

parts-n°	order qty	description
145707	1	LOCK CLAMP F.BOTTOM DRAIN ASSY
145995	1	FITT.DK S-53 FORK
163936	1	WASHER D15/D6.2X1
190035	1	CHAIN 365MM
240306	1	O-RING D29/D21X4
240925	1	O-RING D49.5X3 NITRIL
241006	1	O-RING D79,2X5,7 NITRIL
241017	1	O-RING D74,5X3 NITRIL
242020	1	O-RING 39.2 X 3 VITON
242021	1	O-RING D.37,69x3,53 VITON
281606	1	S-HOOK GALVANIZED
320084	1	FITT.DK NUT 1/2" BSP
320456	1	FITT.DK BULKHEAD 1"BSP DOUBLE
320471	1	FITT.DK NUT 1" BSP JAMB
320482	1	FITT.DK ELB. 1/2" BSP 60 DEG.
320563	1	FITT.DK 3 WAY 1/2" 110 DEG.
320574	1	FITT.DK NUT 1" BSP SPECIAL
320784	1	FITT.DK CAP 1-1/2" BSP
320795	1	FITT.DK NUT 1-1/2" BSP JAMB
321311	1	FILTER BODY S 80 X 4
321322	1	SCREW CAP F. S80 X 4
322059	1	BULKHEAD FOR BOTTOM VALVE
322060	1	STOPPER FOR BOTTOM VALVE
322061	1	NUT FOR BOTTOM VALVE
322097	1	THREADED RING F. LID
322102	1	FITT.DK S-40 BULKHEAD
322103	1	FITT.DK S-53 BULKHEAD
322106	1	FITT.DK S-40 BULKHEAD NUT
322107	1	FITT.DK S-53 BULKHEAD NUT
330072	1	O-RING D53.5/D45.5X4
332577	1	O-RING D38/D30X4 F.1" PUR.
332603	1	CAP F. SUCTION TUBE
332894	1	RETAIN.RING FOR SUCTION FILTER
334078	1	FITT.DK ELB.F.BOTTOM DRAIN ASY
334230	1	FITT.DK S-53 STR.1"
334249	1	FITT.DK S-53 PLUG
334259	1	GASKET F. S-40 BULKHEAD
334260	1	GASKET F. S-53 BULKHEAD
370473	1	NOZZLE INJECTOR 5066-2.0
370484	1	NOZZLE INJECTOR 5066-2.5
370495	1	NOZZLE INJECTOR 5066-3.0
411022	1	SCREW M.6X30 STAINLESS PHILLIP
440392	1	SCREW 6.3 X 25.0 DIN7981C TORX
461097	1	NUT M6 STAINLESS SAFETY
614588	1	SEAL F. LID
614602	1	FILTER BASKET
615575	1	FILTER F.TOP SUCT.30 MESH GRN.
615576	1	FILTER F.TOP SUCT.50 MESH BLUE
713823	1	AGITATION TUBE CPL.NK210
724954	1	BOTTOM VALVE UPPER PART 265GAL
726003	1	LID F. TANK
727879	1	TANK ASSY. NK210
728363	1	SUCTION TUBE ASSY.L=72"
833770	1	TOP SUCTION KIT 300/500
976183	1	DECAL COMPANY D.18,2 X 29,6
28030103	1	CLAMP HOSE GEAR P5/4-S1.5"6724
92702403	1	HOSE PVC SUCT GRAY 1"

FRAME - N-SERIES 105
E0070-HIN, 11:03:19

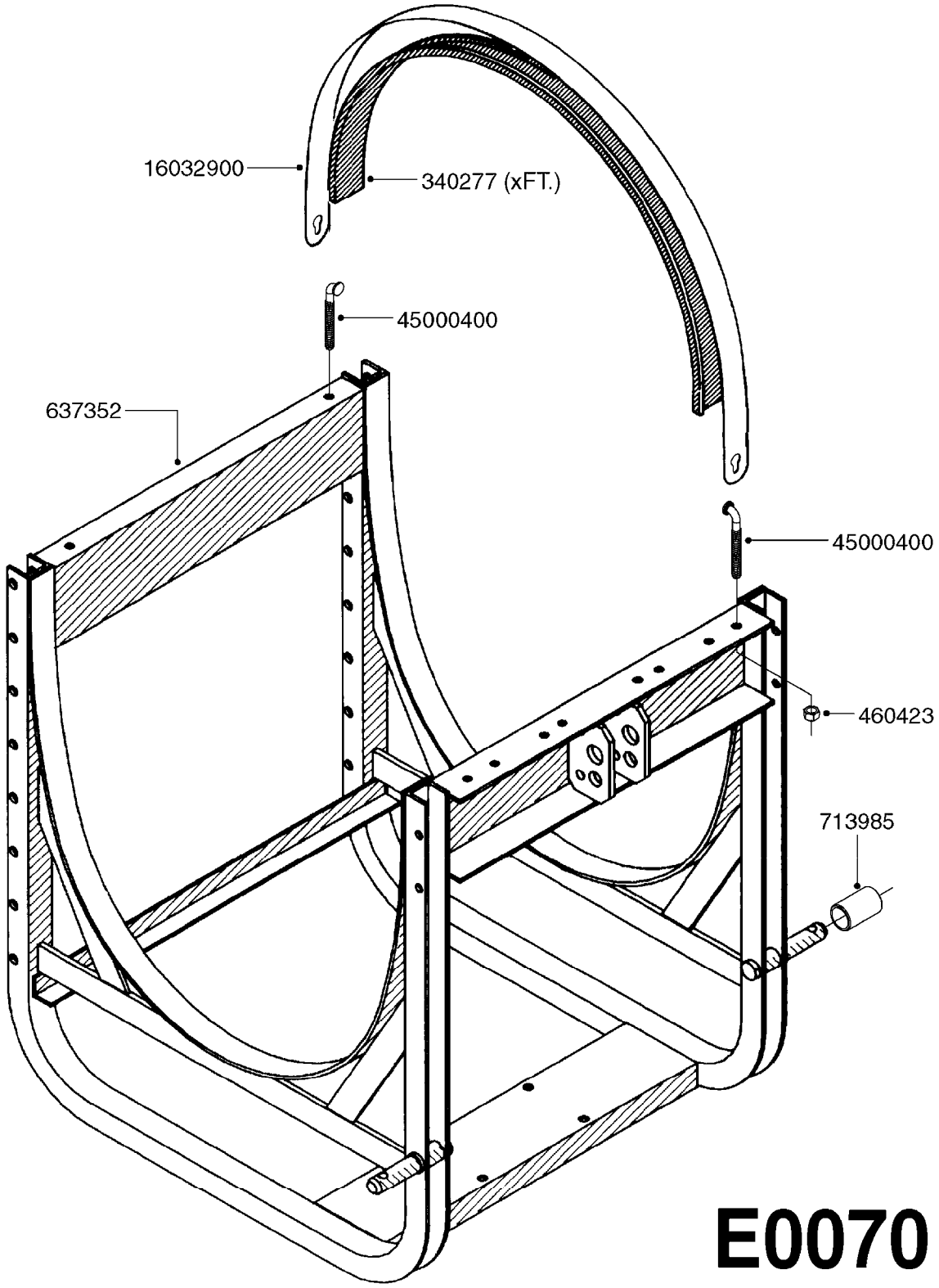

Agroparts: www.HARDI-INTERNATIONAL.com

FRAME - N-SERIES 105
E0070-HIN, 11:03:19

Date 12.08.2020 11:38

parts-n°	order qty	description
340277	1	TANK PACKING - 40mm WIDE x 12"
460423	1	NUT HEX M10X1.50 LOCK DIN985A2 SS
637352	1	TANKFRAME NK 400
713985	1	2 BUSHING F/COUPLING PIN
16032900	1	TANK STRAP NL80/105 L=1025
45000400	1	T-BOLT SPECIAL F.TANK STRAP ES

FRAME - N-SERIES 155/210
E0080-HIN, 01:01:16

Date 12.08.2020 11:38

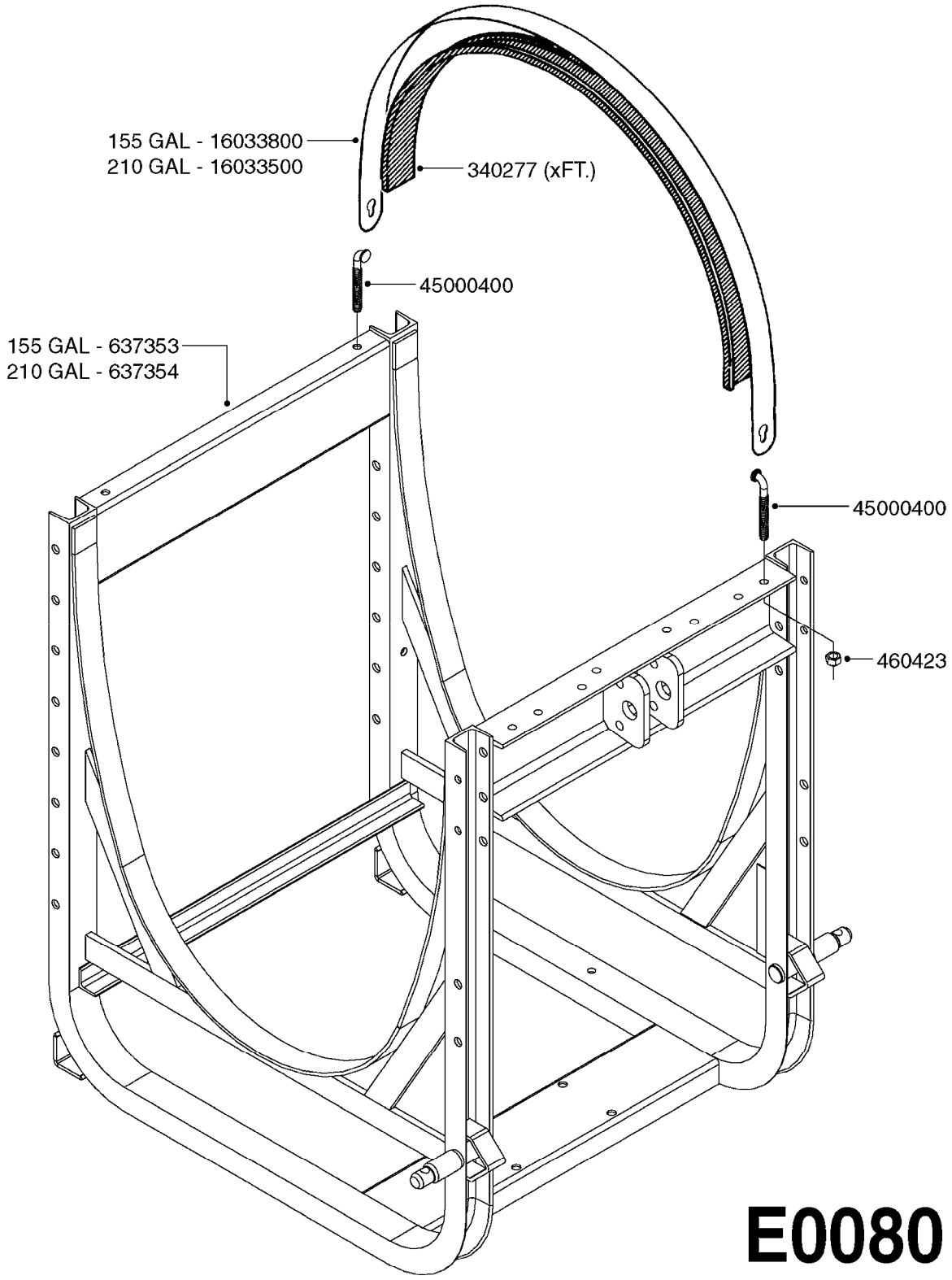

Agroparts: www.HARDI-INTERNATIONAL.com

FRAME - N-SERIES 155/210
E0080-HIN, 01:01:16

Date 12.08.2020 11:38

parts-n°	order qty	description
340277	1	TANK PACKING - 40mm WIDE x 12"
460423	1	NUT HEX M10X1.50 LOCK DIN985A2 SS
637353	1	FRAME NK600
637354	1	FRAME NK800
16033500	1	TANK STRAP 40X2.0 L=1270MM
16033800	1	TANK STRAP NL155 L=1380MM '01
45000400	1	T-BOLT SPECIAL F.TANK STRAP ES

TANK MEGA 230/350 CENTRIFUGAL
E0090-HIN, 01:01:16

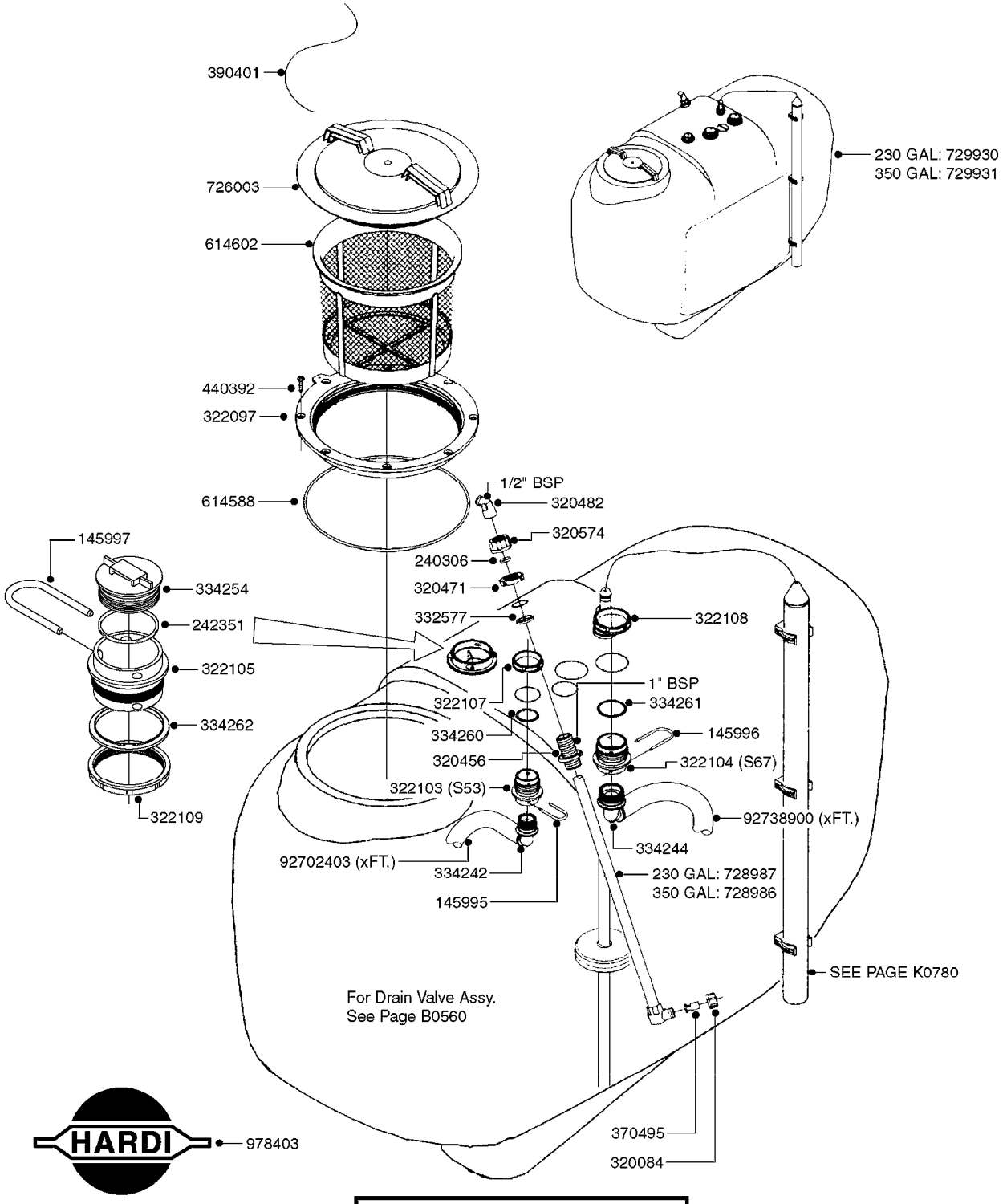

FOR CONNECTING HOSE FITTINGS, SEE SECTION L

E0090

Agroparts: www.HARDI-INTERNATIONAL.com

TANK MEGA 230/350 CENTRIFUGAL
E0090-HIN, 01:01:16

Date 12.08.2020 11:38

parts-n°	order qty	description
145995	1	FITT.DK S-53 FORK
145996	1	FITT.DK S-67 FORK
145997	1	FITT.DK S-93 FORK
240306	1	O-RING D29/D21X4
242351	1	O-RING D69.5X3.0 VITON F.S-93
320084	1	FITT.DK NUT 1/2" BSP
320456	1	FITT.DK BULKHEAD 1"BSP DOUBLE
320471	1	FITT.DK NUT 1" BSP JAMB
320482	1	FITT.DK ELB. 1/2" BSP 60 DEG.
320574	1	FITT.DK NUT 1" BSP SPECIAL
322097	1	THREADED RING F. LID
322103	1	FITT.DK S-53 BULKHEAD
322104	1	FITT.DK S-67 BULKHEAD
322105	1	FITT.DK S-93 BULKHEAD DOUBLE
322107	1	FITT.DK S-53 BULKHEAD NUT
322108	1	FITT.DK S-67 BULKHEAD NUT
322109	1	FITT.DK S-93 BULKHEAD NUT
332577	1	O-RING D38/D30X4 F.1" PUR.
334242	1	FITT.DK S-53 ELB.1"
334244	1	FITT.DK S-67 ELB.1-1/4"
334254	1	FITT.DK S-93 PLUG
334260	1	GASKET F. S-53 BULKHEAD
334261	1	GASKET F. S-67 BULKHEAD
334262	1	GASKET F.S-93 BULKHEAD
370495	1	NOZZLE INJECTOR 5066-3.0
390401	1	CORD NYLON F.LID 900MM
440392	1	SCREW 6.3 X 25.0 DIN7981C TORX
614588	1	SEAL F. LID
614602	1	FILTER BASKET
726003	1	LID F. TANK
728986	1	AGITATION TUBE L=54.88"
728987	1	AGITATION TUBE L=47.44"
729930	1	TANK ASSY. COMPLETE MEGA 230G
729931	1	TANK ASSY. COMPLETE MEGA 350G
978403	1	DECAL COMPANY 280 X 450
92702403	1	HOSE PVC SUCT GRAY 1"
92738900	1	HOSE R X PVC X 1-1/4" 0012"

TANK MEGA 230/350 DIAPHRAGM
E0100-HIN, 01:01:16

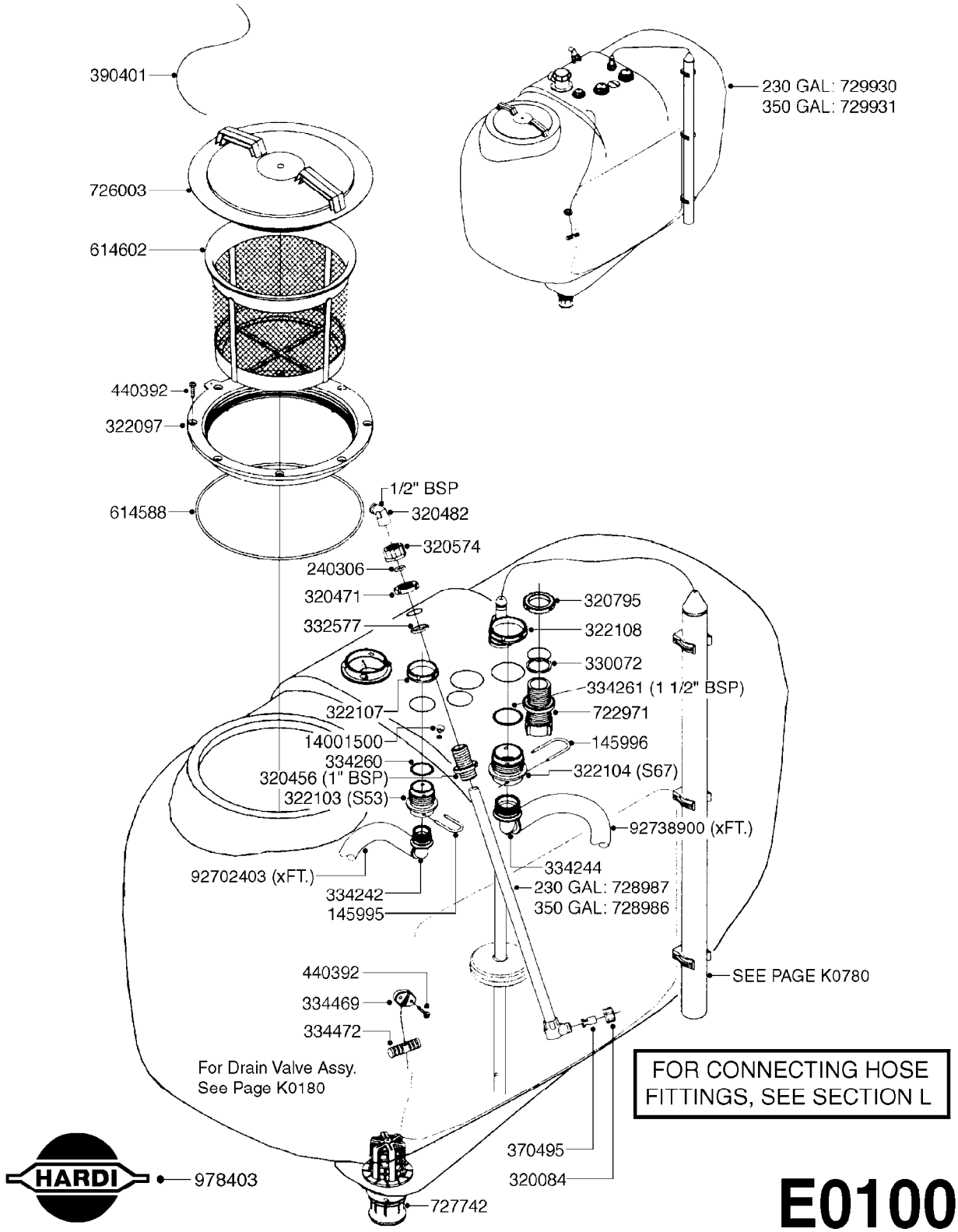

E0100

Agroparts: www.HARDI-INTERNATIONAL.com

TANK MEGA 230/350 DIAPHRAGM
E0100-HIN, 01:01:16

Date 12.08.2020 11:38

parts-n°	order qty	description
145995	1	FITT.DK S-53 FORK
145996	1	FITT.DK S-67 FORK
240306	1	O-RING D29/D21X4
320084	1	FITT.DK NUT 1/2" BSP
320456	1	FITT.DK BULKHEAD 1"BSP DOUBLE
320471	1	FITT.DK NUT 1" BSP JAMB
320482	1	FITT.DK ELB. 1/2" BSP 60 DEG.
320574	1	FITT.DK NUT 1" BSP SPECIAL
320795	1	FITT.DK NUT 1-1/2" BSP JAMB
322097	1	THREADED RING F. LID
322103	1	FITT.DK S-53 BULKHEAD
322104	1	FITT.DK S-67 BULKHEAD
322107	1	FITT.DK S-53 BULKHEAD NUT
322108	1	FITT.DK S-67 BULKHEAD NUT
330072	1	O-RING D53.5/D45.5X4
332577	1	O-RING D38/D30X4 F.1" PUR.
334242	1	FITT.DK S-53 ELB.1"
334244	1	FITT.DK S-67 ELB.1-1/4"
334260	1	GASKET F. S-53 BULKHEAD
334261	1	GASKET F. S-67 BULKHEAD
334469	1	CLEVIS F.CORD TOP DRAIN ASSY.
334472	1	HANDLE FOR TOP DRAIN
370495	1	NOZZLE INJECTOR 5066-3.0
390401	1	CORD NYLON F.LID 900MM
440392	1	SCREW 6.3 X 25.0 DIN7981C TORX
614588	1	SEAL F. LID
614602	1	FILTER BASKET
722971	1	SAFETY VALVE SCF 217PSI(15BAR)
726003	1	LID F. TANK
727742	1	TOP DRAIN CORD TYPE
728986	1	AGITATION TUBE L=54.88"
728987	1	AGITATION TUBE L=47.44"
729930	1	TANK ASSY. COMPLETE MEGA 230G
729931	1	TANK ASSY. COMPLETE MEGA 350G
978403	1	DECAL COMPANY 280 X 450
14001500	1	GROMMET F.TOP DRAIN CORD
92702403	1	HOSE PVC SUCT GRAY 1"
92738900	1	HOSE R X PVC X 1-1/4" 0012"

FRAME MEGA 230/350
E0110-HIN, 01:01:16

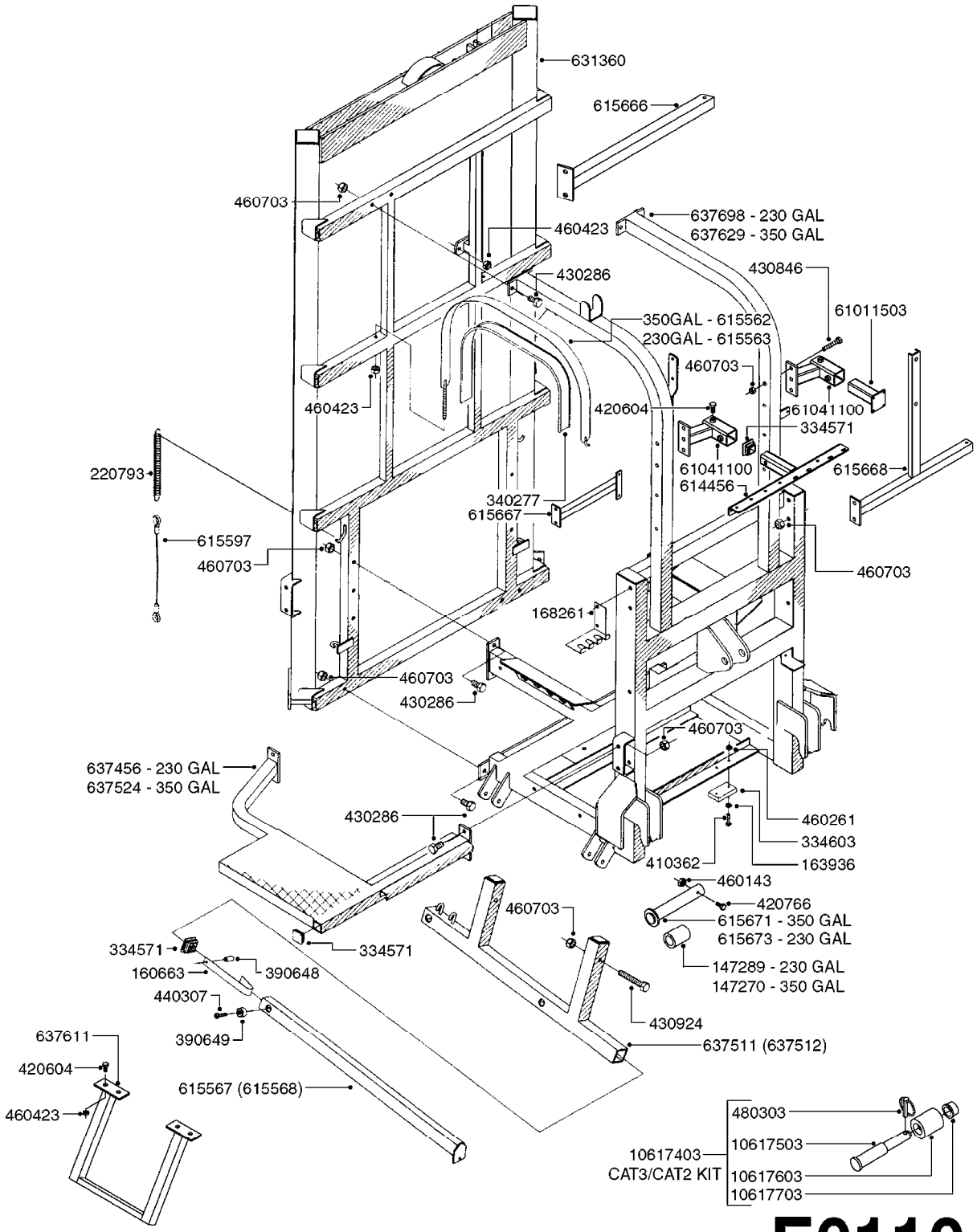

E0110

Agroparts: www.HARDI-INTERNATIONAL.com

FRAME MEGA 230/350
E0110-HIN, 01:01:16

Date 12.08.2020 11:38

parts-n°	order qty	description
147270	1	BUSHING 60/38 L=80MM
147289	1	BUSHING 60/30 L=80MM
160663	1	SPRING F. SUPPORT LOCK
163936	1	WASHER D15/D6.2X1
168261	1	BRACKET FOR HYD HOSE
220793	1	SPRING D21/D4X250MM
334571	1	PLUG 40x40x2 F.SQ.TUBE
334603	1	RUBBER STOP 86X48X15
340277	1	TANK PACKING - 40mm WIDE x 12"
390648	1	SUPPORT LOCK(LOWER) F. MEGA
390649	1	SUPPORT LOCK(UPPER) F. MEGA
410362	1	BOLT HEX 8.8 SS M6X20
420604	1	BOLT HEX 8.8 DEL M10X25 FT DIN933
420766	1	BOLT HEX M8-45/22 SST A2 DIN931
430286	1	BOLT HEX 8.8 DEL M12X30 FT
430846	1	BOLT HEX 8.8 DEL M12X80
430924	1	BOLT HEX 8.8 DEL M12 X 85
440307	1	SCREW SHEET-METAL 3/4" NO. 10
460143	1	LOCK NUT M8 SST A2 DIN985
460261	1	NUT HEX M6X1.00 LOCK DIN985 A2 SS
460423	1	NUT HEX M10X1.50 LOCK DIN985A2 SS
460703	1	NUT HEX M12X1.75 LOCK DIN985A2 SS
480303	1	PIN 7/16 SNAP RING
614456	1	BRACKET F.EC 3&4 BANK VALVES
615562	1	TANK STRAP MEGA
615563	1	TANK STRAP F: MEGA 230
615567	1	SUPPORT TUBE(INNER) MEGA RIGHT
615568	1	SUPPORT TUBE(INNER) MEGA LEFT
615597	1	CABLE D3X395MM F.MEGA LEG
615666	1	MOUNT BRACKET F.MANIFOLD MEGA
615667	1	MOUNT BRACKET F MANIFOLD
615668	1	MOUNT BKT.F.CLEAN WATER MEGA
615671	1	PIN LOWER LINK CAT 3 F.MEGA350
615673	1	PIN 28MM LOWER LINK F.MEGA 230
631360	1	UPRIGHT MEGA EAGLE
637456	1	FOOT BOARD, MEGA 230
637511	1	SUPPORT LEG FOR MEGA RIGHT
637512	1	SUPPORT LEG FOR MEGA LEFT
637524	1	FOOT BOARD, MEGA 350
637611	1	EXTRA STEP, MEGA 230/350
637629	1	FRAME F.MEGA 350
637698	1	.
10617403	1	KIT CAT2 MEGA 350
10617503	1	PIN LOWER HITCH FOR CAT2/3
10617603	1	SPACER F. HITCH PIN CAT2/3
10617703	1	BUSHING F. HITCH PIN CAT2/3
61011503	1	PRESSURE REGULATOR MOUNT BRKT.
61041100	1	CONTROL POST F. MEGA

FRAME - DELTA 3PT
E0120-HIN, 01:01:16

Date 12.08.2020 11:38

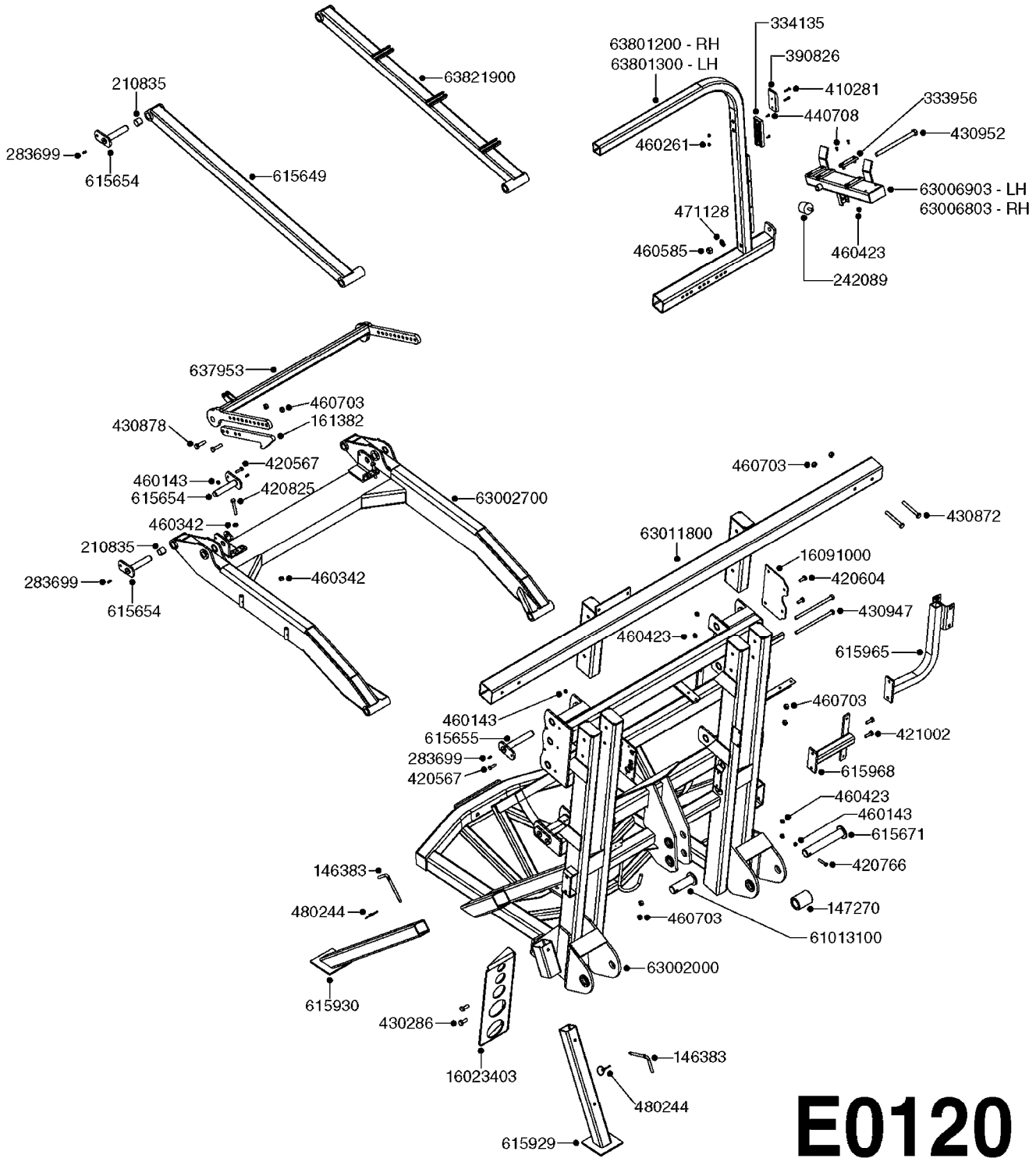

Agroparts: www.HARDI-INTERNATIONAL.com

FRAME - DELTA 3PT
E0120-HIN, 01:01:16

Date 12.08.2020 11:38

parts-n°	order qty	description
146383	1	LOCKING PAWL D10 L-90
147270	1	BUSHING 60/38 L=80MM
161382	1	HOOK F.TRANSPORT LOCK L=340MM
210835	1	BUSHING D28/25 L=25
242089	1	RUBBER STOP D50X40 M10
283699	1	GREASE NIPPLE M6X1
333956	1	SLIDE SHOE 91X25X10
334135	1	SLIDE SHOE 140X45X15
390826	1	SLIDE PAD F.TRANSPORT BKT.CM/D
410281	1	BOLT HEX 8.8 DEL M6X25 DIN933 A2
420567	1	BOLT HEX 8.8 DEL M8X30 FT
420604	1	BOLT HEX 8.8 DEL M10X25 FT DIN933
420766	1	BOLT HEX M8-45/22 SST A2 DIN931
420825	1	BOLT HEX 8.8 DEL M10X65
421002	1	BOLT HEX 8.8 DEL M10X30 FT DIN933
430286	1	BOLT HEX 8.8 DEL M12X30 FT
430872	1	BOLT HEX 8.8 DEL M12X100 FT
430878	1	BOLT HEX 8.8 DEL M12X45 DIN931
430947	1	BOLT HEX 8.8 DEL M12X210
430952	1	BOLT HEX M16X220 DIN931-8.8 DE
440708	1	SCREW M5.5X16 SELF TAPPING SS
460143	1	LOCK NUT M8 SST A2 DIN985
460261	1	NUT HEX M6X1.00 LOCK DIN985 A2 SS
460342	1	NUT HEX M10 DEL DIN934
460423	1	NUT HEX M10X1.50 LOCK DIN985A2 SS
460585	1	LOCKING NUT M16 DIN985 A2 SS
460703	1	NUT HEX M12X1.75 LOCK DIN985A2 SS
471128	1	WASHER, M16, Ø30/17.0X 3.0, SS
480244	1	PIN SNAP D4.5
615649	1	ARM UPPER F. PARALIFT
615654	1	PIN D25 X 123 F. PARALIFT
615655	1	PIN D25 X 156 F. PARALIFT
615671	1	PIN LOWER LINK CAT 3 F.MEGA350
615929	1	SUPPORT LEG FRONT DELTA
615930	1	SUPPORT LEG BACK DELTA
615965	1	BRACKET FOR HARDI FILLER
615968	1	BRACKET FOR MANIFOLD DELTA
637953	1	TRANSPORT SAFETY HOOK ARM ASSY
16023403	1	BRACKET F. HOSE COUPLERS
16091000	1	PLATE 4.0 X 250 X 150/4 X D11
61013100	1	PIN UPPER LINK, DELTA-SPC
63002000	1	DELTA 3-PT FRAME CAT.III
63002700	1	PARALIFT BENT WELDMENT PAINTED
63006803	1	SWIVEL BRACKET DELTA SPC - RH
63006903	1	SWIVEL BRACKET DELTA SPC - LH
63011800	1	BRIDGE F.TRANSP.DELTA-SPC
63801200	1	TRANSPORT BRACKET DELTA - RH
63801300	1	TRANSPORT BRACKET DELTA - LH
63821900	1	PARALIFT ARM W/MOUNTS

TANK - FRONT TANK 250/350
E0130-HIN, 01:01:16

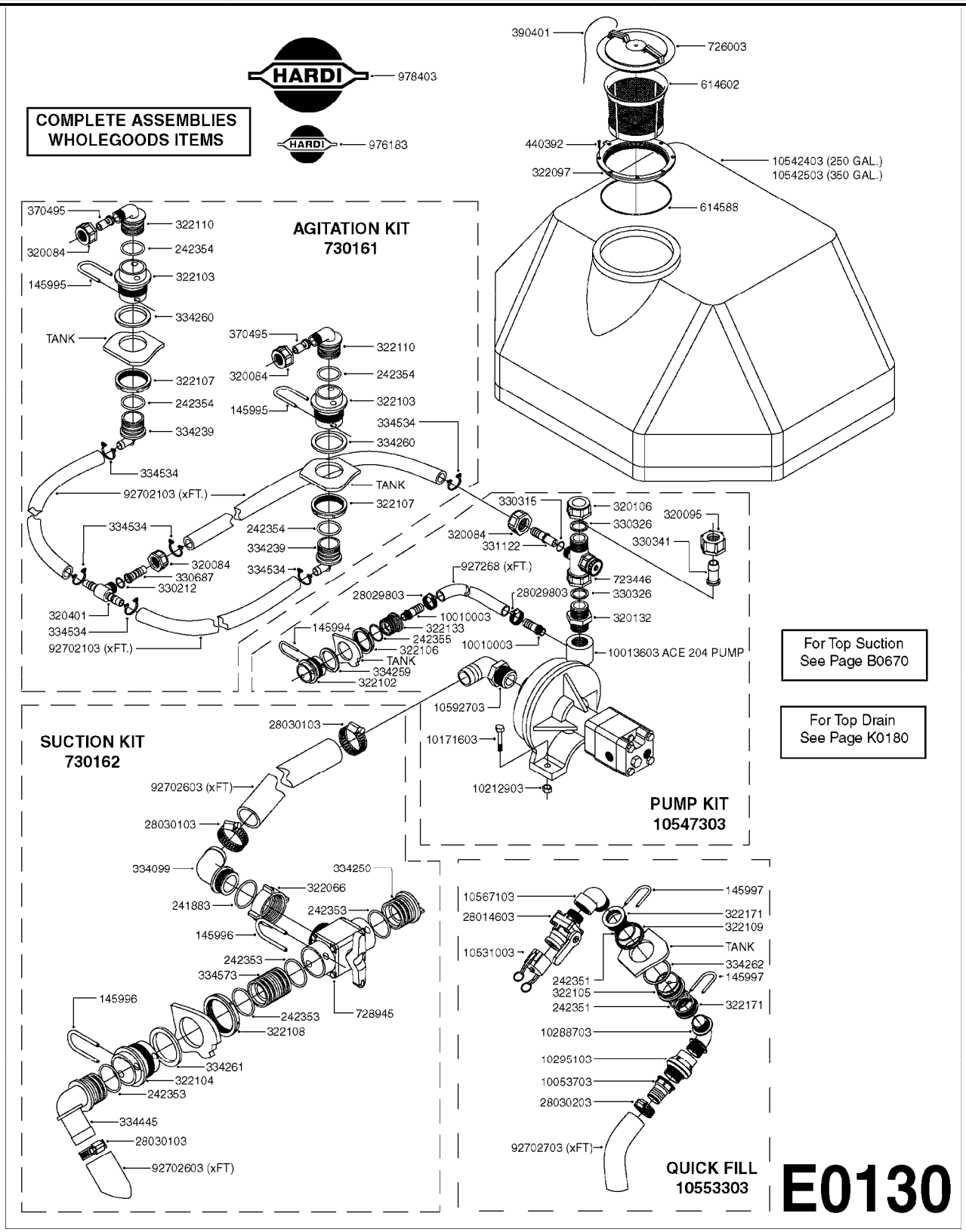

TANK - FRONT TANK 250/350
E0130-HIN, 01:01:16

Date 12.08.2020 11:38

parts-n°	order qty	description
145994	1	FITT.DK S-40 FORK
145995	1	FITT.DK S-53 FORK
145996	1	FITT.DK S-67 FORK
145997	1	FITT.DK S-93 FORK
241883	1	O-RING 3 X 39.2 NITRIL
242351	1	O-RING D69.5X3.0 VITON F.S-93
242353	1	O-RING 3 X 44.2 VITON
242354	1	O-RING D32.2X3.0 VITON
242355	1	O-RING D19.2X3.0 VITON F.S-40
320084	1	FITT.DK NUT 1/2" BSP
320095	1	FITT.DK NUT 1" BSP
320106	1	FITT.DK CAPNUT 1" BSP
320132	1	FITT.DK HN 1" BSP
320401	1	FITT.DK TEE 1/2X1/2HB X1/2"BSP
322066	1	FITT.DK S-56 NUT
322097	1	THREADED RING F. LID
322102	1	FITT.DK S-40 BULKHEAD
322103	1	FITT.DK S-53 BULKHEAD
322104	1	FITT.DK S-67 BULKHEAD
322105	1	FITT.DK S-93 BULKHEAD DOUBLE
322106	1	FITT.DK S-40 BULKHEAD NUT
322107	1	FITT.DK S-53 BULKHEAD NUT
322108	1	FITT.DK S-67 BULKHEAD NUT
322109	1	FITT.DK S-93 BULKHEAD NUT
322110	1	FITT.DK S-53 ELB. 1/2" BSP
322133	1	FITT.DK S-40 PLUG W 1/8 THREAD
322171	1	FITT.DK S-93 THREAD INS.2"BSP
330212	1	O-RING D19/D14X2.4 F.1/2"NUT
330315	1	O-RING D18.4/D13X.6
330326	1	O-RING D30/D24X2 F.1"NUT
330341	1	FITT.DK HB 1" F. 1" NUT
330687	1	FITT.DK HB 1/2" F. 1/2" NUT
331122	1	VALVE SEAT WITH 1/2" HOSE TAIL
334099	1	FITT.DK S-61 ELB.1-1/2"110 DEG
334239	1	FITT.DK S-53 ELB.1/2"
334250	1	FITT.DK S-67 PLUG
334259	1	GASKET F. S-40 BULKHEAD
334260	1	GASKET F. S-53 BULKHEAD
334261	1	GASKET F. S-67 BULKHEAD
334262	1	GASKET F.S-93 BULKHEAD
334445	1	FITT.DK S-67 ELB.1-1/2"
334534	1	CLAMP HOSE PLASTIC 1/2"
334573	1	FITT.DK S-67 CONNECTOR
370495	1	NOZZLE INJECTOR 5066-3.0
390401	1	CORD NYLON F.LID 900MM
440392	1	SCREW 6.3 X 25.0 DIN7981C TORX
614588	1	SEAL F. LID
614602	1	FILTER BASKET
723446	1	AGITATION VALVE ASSY. ADJUST.
726003	1	LID F. TANK
728945	1	VALVE 2-WAY YELLOW W.S-67 ENDS
730161	1	AGITATION KIT FRONT TANK
730162	1	SUCTION KIT (BOTTOM) FRT TANK
927268	1	HOSE BLUE PVC X 1/4 X 0012"
976183	1	DECAL COMPANY D.18,2 X 29,6
978403	1	DECAL COMPANY 280 X 450
10010003	1	FITT.PO.HB 0.125X0.25 IMB0102
10013603	1	PUMP ACE HY 204
10053703	1	FITT.PO.HB STR. 2"BSP Æ4411
10171603	1	BOLT HEX 3/8 NC GR.2 01.50"
10212903	1	NUT HEX NC (NYLON LOCK) 3/8"

parts-n°	order qty	description
10288703	1	FITT.PO.EL 2MX2M 90 DEG MCPHEE
10295103	1	FOOT VALVE 2"
10531003	1	CAP F.MALE QUICK COUPLER 2"
10542403	1	TANK RAW 250 GAL. FRONT MT.
10542503	1	TANK RAW 350 GAL. FRONT MT.
10547303	1	*PUMP KIT FRONT TANK ACE206
10553303	1	QUICK FILL KIT FRONT TANK
10567103	1	FITT.PO.EL 2.0X2.0
10592703	1	FITT.MF EL 1.25NPT X 1.50HB
28014603	1	VALVE STUBBY 2" BANJO
28029803	1	CLAMP HOSE GEAR P1/2" 6708
28030103	1	CLAMP HOSE GEAR P5/4-S1.5"6724
28030203	1	CLAMP HOSE T-BOLT S2" 235-67
92702103	1	HOSE R X1/2" X300PSI WP X0012"
92702603	1	HOSE PVC SUCT GRAY 1-1/2"
92702703	1	HOSE PVC SUCT GRAY 2"

FRAME FRONT TANK 250/350
E0140-HIN, 01:01:16

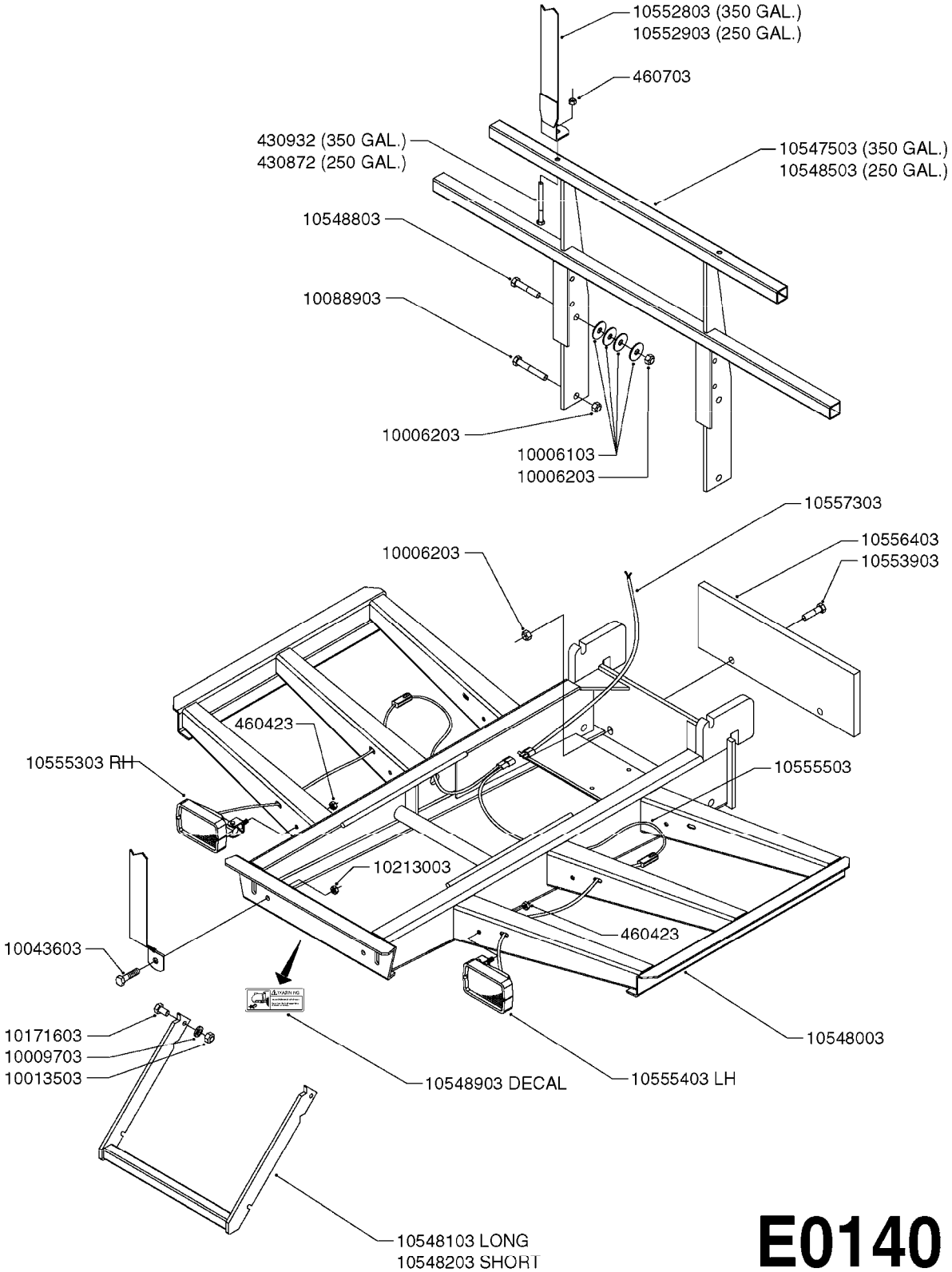

E0140

Agroparts: www.HARDI-INTERNATIONAL.com

FRAME FRONT TANK 250/350
E0140-HIN, 01:01:16

Date 12.08.2020 11:39

parts-n°	order qty	description
10006103	1	WASHER PLATE 5/8
10006203	1	NUT HEX NC LOCK 5/8"
10009703	1	WASHER LOCK L/W Z 3/8"
10013503	1	NUT HEX NC 3/8"
10043603	1	BOLT HEX 7/16 NC GR.5 01.25"
10088903	1	BOLT HEX 5/8 NC GR.2 03.50"
10171603	1	BOLT HEX 3/8 NC GR.2 01.50"
10213003	1	NUT HEX NC (NYLON LOCK) 7/16"
10547503	1	REAR SUPPORT 350G F.FRONT TANK
10548003	1	FRAME F.FRONT TANK
10548103	1	STEP LONG F.FRONT TANK
10548203	1	STEP SHORT F.FRONT TANK
10548503	1	REAR SUPPORT 250G F.FRONT TANK
10548803	1	BOLT HEX 5/8 NC GR.2 02.75"
10548903	1	DECAL "WARNING-DO NOT TOW" ENG
10552803	1	STRAP F.TANK 50X2160 350G
10552903	1	STRAP F.TANK 50X2070 250G
10553903	1	BOLT HEX 5/8 NC GR.8 02.50"
10555303	1	HEAD LIGHT RH FRONT TANK
10555403	1	HEAD LIGHT LH FRONT TANK
10555503	1	WIRING HARNESS MIDDLE FR.TANK
10556403	1	RAW MOUNT PLATE FRONT TANK
10557303	1	WIRING HARNESS END FOR FR.TANK
430872	1	BOLT HEX 8.8 DEL M12X100 FT
430932	1	BOLT HEX 8.8 DEL M12X130 FT
460423	1	NUT HEX M10X1.50 LOCK DIN985A2 SS
460703	1	NUT HEX M12X1.75 LOCK DIN985A2 SS

TANK - ESC 300/500
E0150-HIN, 01:01:16

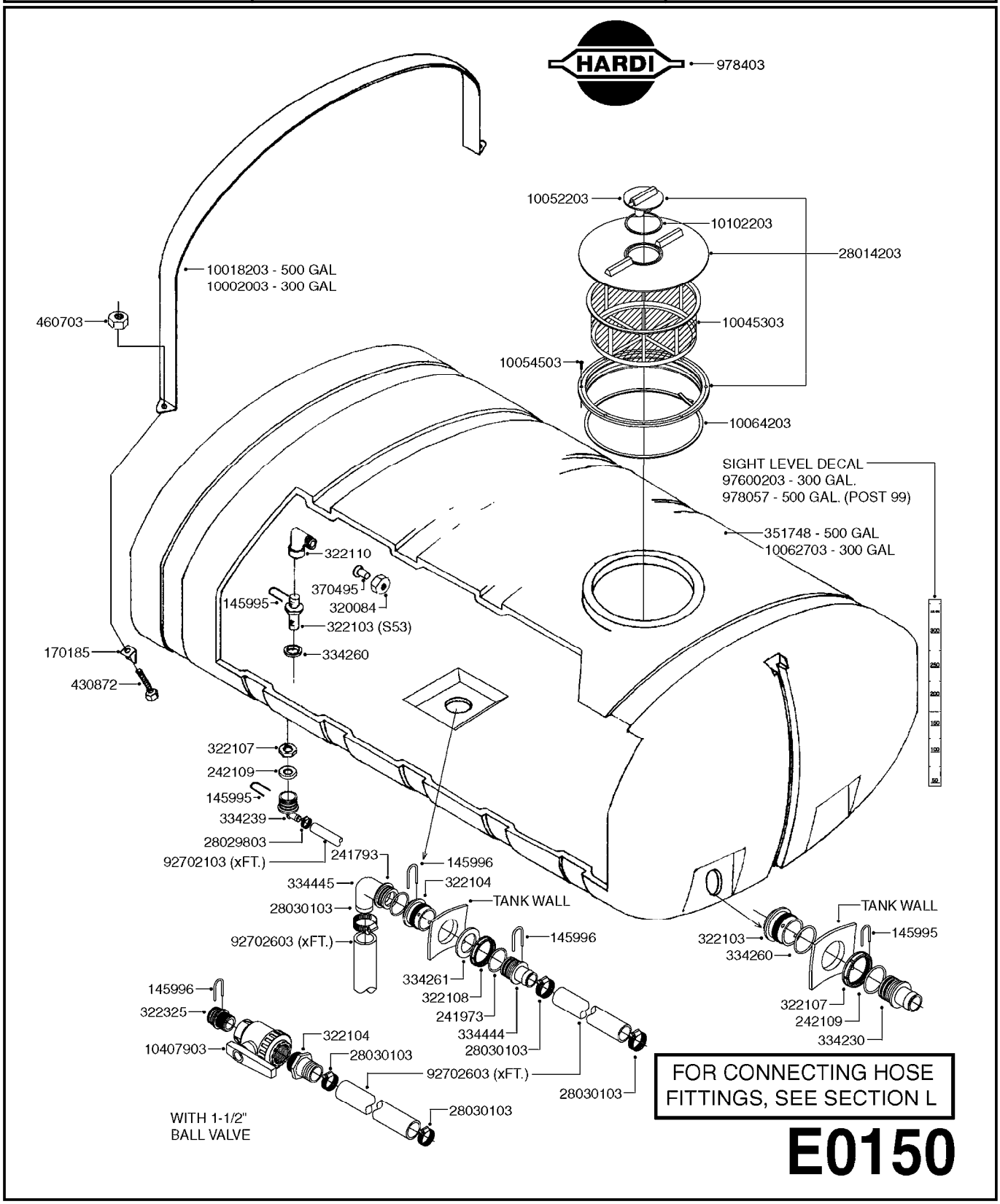

Agroparts: www.HARDI-INTERNATIONAL.com

TANK - ESC 300/500
E0150-HIN, 01:01:16

Date 12.08.2020 11:39

parts-n°	order qty	description
145995	1	FITT.DK S-53 FORK
145996	1	FITT.DK S-67 FORK
170185	1	ANGLE BRACKET F. TANKSTRAP
241973	1	O-RING Ø3 X 44.2 70 SHORES NITRIL
242109	1	O-RING D32.2x3.0
320084	1	FITT.DK NUT 1/2" BSP
322103	1	FITT.DK S-53 BULKHEAD
322104	1	FITT.DK S-67 BULKHEAD
322107	1	FITT.DK S-53 BULKHEAD NUT
322108	1	FITT.DK S-67 BULKHEAD NUT
322110	1	FITT.DK S-53 ELB. 1/2" BSP
322325	1	FITT.DK S-67 X 1-1/2"BSP LONG
334230	1	FITT.DK S-53 STR.1"
334239	1	FITT.DK S-53 ELB.1/2"
334260	1	GASKET F. S-53 BULKHEAD
334261	1	GASKET F. S-67 BULKHEAD
334444	1	FITT.DK S-67 STR.1-1/2" PVC
334445	1	FITT.DK S-67 ELB.1-1/2"
351748	1	TANK RAW 500 GAL
370495	1	NOZZLE INJECTOR 5066-3.0
430872	1	BOLT HEX 8.8 DEL M12X100 FT
460703	1	NUT HEX M12X1.75 LOCK DIN985A2 SS
978057	1	DECAL S/G TANK 500GAL-99
978403	1	DECAL COMPANY 280 X 450
10002003	1	STRAP F. TR TANK 300 GAL.
10018203	1	TANK STRAP 500 GA.PRE'03 (92")
10045303	1	FILTER BASKET 16"
10052203	1	LID VENT ASSY
10054503	1	SCREW 3/4" SELF TAPPING
10062703	1	TANK RAW 300 GAL.84 MODEL
10064203	1	SET SEALING SPONGE 1 Ft BULK
10102203	1	GASKET F.16" LID BREATHER
10407903	1	BALL VALVE 1-1/2" MCPHEE
28014203	1	LID ASSY. (3-PC.) 16" ARAG
28029803	1	CLAMP HOSE GEAR P1/2" 6708
28030103	1	CLAMP HOSE GEAR P5/4-S1.5"6724
92702103	1	HOSE R X1/2" X300PSI WP X0012"
92702603	1	HOSE PVC SUCT GRAY 1-1/2"
97600203	1	DECAL S/G TANK 300 GAL-99

TANK - TL/TR 300/500 W/BK 180
E0160-HIN, 01:01:16

Page 0

Date 12.08.2020 11:39

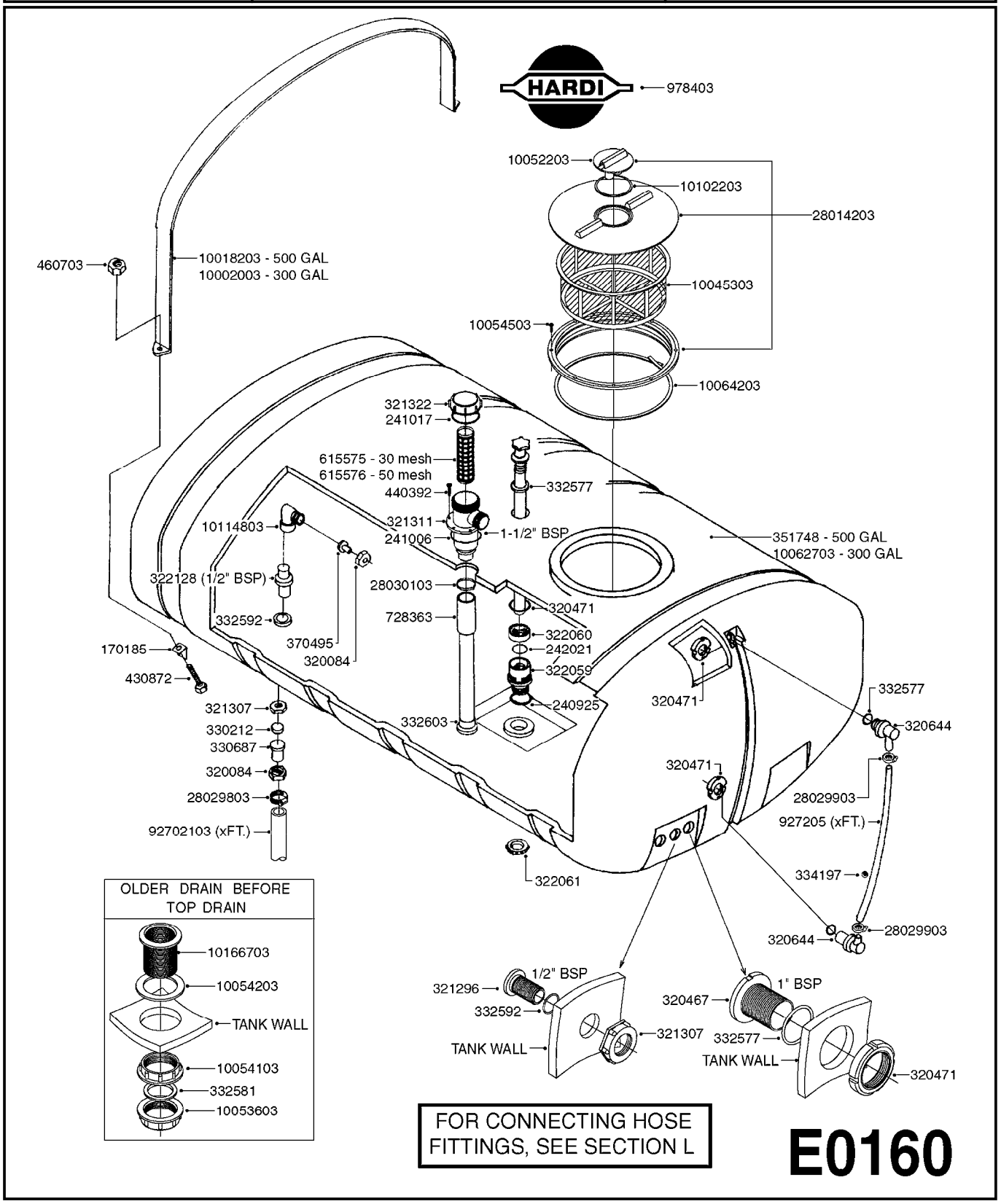

Agroparts: www.HARDI-INTERNATIONAL.com

TANK - TL/TR 300/500 W/BK 180
E0160-HIN, 01:01:16

Date 12.08.2020 11:39

parts-n°	order qty	description
170185	1	ANGLE BRACKET F. TANKSTRAP
240925	1	O-RING D49.5X3 NITRIL
241006	1	O-RING D79,2X5,7 NITRIL
241017	1	O-RING D74,5X3 NITRIL
242021	1	O-RING D.37,69x3,53 VITON
320084	1	FITT.DK NUT 1/2" BSP
320467	1	FITT.DK BULKHEAD 1"BSP SINGLE
320471	1	FITT.DK NUT 1" BSP JAMB
320644	1	FITT.DK ELB.3/4"HB X 1" BSP
321296	1	FITT.DK BULKHEAD 1/2" BSP SING
321307	1	FITT.DK NUT 1/2" BSP JAMB
321311	1	FILTER BODY S 80 X 4
321322	1	SCREW CAP F. S80 X 4
322059	1	BULKHEAD FOR BOTTOM VALVE
322060	1	STOPPER FOR BOTTOM VALVE
322061	1	NUT FOR BOTTOM VALVE
322128	1	NIPPLE 1/2"
330212	1	O-RING D19/D14X2.4 F.1/2"NUT
330687	1	FITT.DK HB 1/2" F. 1/2" NUT
332577	1	O-RING D38/D30X4 F.1" PUR.
332581	1	GASKET F. 1-1/2" BSP CAPNUT.
332592	1	O-RING D26/D20X3
332603	1	CAP F. SUCTION TUBE
334197	1	BALL F. LIQUID LEV. INDICATOR
351748	1	TANK RAW 500 GAL
370495	1	NOZZLE INJECTOR 5066-3.0
430872	1	BOLT HEX 8.8 DEL M12X100 FT
440392	1	SCREW 6.3 X 25.0 DIN7981C TORX
460703	1	NUT HEX M12X1.75 LOCK DIN985A2 SS
615575	1	FILTER F.TOP SUCT.30 MESH GRN.
615576	1	FILTER F.TOP SUCT.50 MESH BLUE
728363	1	SUCTION TUBE ASSY.L=72"
927205	1	HOSE R X CLEAR X 3/4 X 0012"
978403	1	DECAL COMPANY 280 X 450
10002003	1	STRAP F. TR TANK 300 GAL.
10018203	1	TANK STRAP 500 GA.PRE'03 (92")
10045303	1	FILTER BASKET 16"
10052203	1	LID VENT ASSY
10053603	1	FITT. CAPNUT 2"BSP 5601
10054103	1	FITT.PO.NUT 2" BSP JAMB MCPHEE
10054203	1	GASKET F. 2" FITTINGS RUBBER
10054503	1	SCREW 3/4" SELF TAPPING
10062703	1	TANK RAW 300 GAL.84 MODEL
10064203	1	SET SEALING SPONGE 1 Ft BULK
10102203	1	GASKET F.16" LID BREATHER
10114803	1	FITT.PO.SE 0.50X0.50 SE1200
10166703	1	FITT.PO.BULKHEAD 2" BSP
28014203	1	LID ASSY. (3-PC.) 16" ARAG
28029803	1	CLAMP HOSE GEAR P1/2" 6708
28029903	1	CLAMP HOSE GEAR P3/4"-S1" 6712
28030103	1	CLAMP HOSE GEAR P5/4-S1.5"6724
92702103	1	HOSE R X1/2" X300PSI WP X0012"

TANK TR 300/500 W/EC (PRE 93)
E0170-HIN, 01:01:16

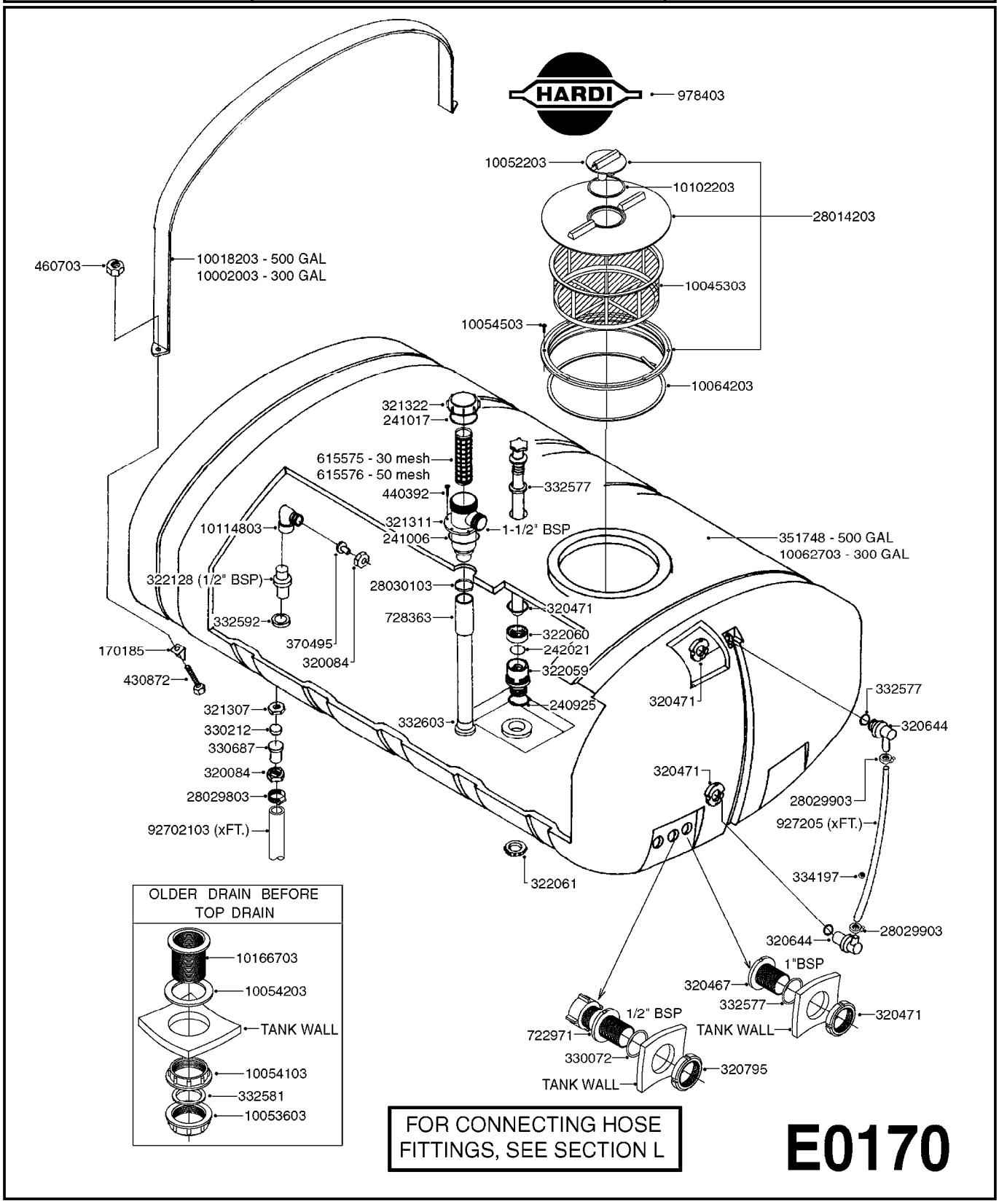

Agroparts: www.HARDI-INTERNATIONAL.com

TANK TR 300/500 W/EC (PRE 93)
E0170-HIN, 01:01:16

Date 12.08.2020 11:39

parts-n°	order qty	description
170185	1	ANGLE BRACKET F. TANKSTRAP
240925	1	O-RING D49.5X3 NITRIL
241006	1	O-RING D79,2X5,7 NITRIL
241017	1	O-RING D74,5X3 NITRIL
242021	1	O-RING D.37,69x3,53 VITON
320084	1	FITT.DK NUT 1/2" BSP
320467	1	FITT.DK BULKHEAD 1"BSP SINGLE
320471	1	FITT.DK NUT 1" BSP JAMB
320644	1	FITT.DK ELB.3/4"HB X 1" BSP
320795	1	FITT.DK NUT 1-1/2" BSP JAMB
321307	1	FITT.DK NUT 1/2" BSP JAMB
321311	1	FILTER BODY S 80 X 4
321322	1	SCREW CAP F. S80 X 4
322059	1	BULKHEAD FOR BOTTOM VALVE
322060	1	STOPPER FOR BOTTOM VALVE
322061	1	NUT FOR BOTTOM VALVE
322128	1	NIPPLE 1/2"
330072	1	O-RING D53.5/D45.5X4
330212	1	O-RING D19/D14X2.4 F.1/2"NUT
330687	1	FITT.DK HB 1/2" F. 1/2" NUT
332577	1	O-RING D38/D30X4 F.1" PUR.
332581	1	GASKET F. 1-1/2" BSP CAPNUT.
332592	1	O-RING D26/D20X3
332603	1	CAP F. SUCTION TUBE
334197	1	BALL F. LIQUID LEV. INDICATOR
351748	1	TANK RAW 500 GAL
370495	1	NOZZLE INJECTOR 5066-3.0
430872	1	BOLT HEX 8.8 DEL M12X100 FT
440392	1	SCREW 6.3 X 25.0 DIN7981C TORX
460703	1	NUT HEX M12X1.75 LOCK DIN985A2 SS
615575	1	FILTER F.TOP SUCT.30 MESH GRN.
615576	1	FILTER F.TOP SUCT.50 MESH BLUE
722971	1	SAFETY VALVE SCF 217PSI(15BAR)
728363	1	SUCTION TUBE ASSY.L=72"
927205	1	HOSE R X CLEAR X 3/4 X 0012"
978403	1	DECAL COMPANY 280 X 450
10002003	1	STRAP F. TR TANK 300 GAL.
10018203	1	TANK STRAP 500 GA.PRE'03 (92")
10045303	1	FILTER BASKET 16"
10052203	1	LID VENT ASSY
10053603	1	FITT. CAPNUT 2"BSP 5601
10054103	1	FITT.PO.NUT 2" BSP JAMB MCPHEE
10054203	1	GASKET F. 2" FITTINGS RUBBER
10054503	1	SCREW 3/4" SELF TAPPING
10062703	1	TANK RAW 300 GAL.84 MODEL
10064203	1	SET SEALING SPONGE 1 Ft BULK
10102203	1	GASKET F.16" LID BREATHER
10114803	1	FITT.PO.SE 0.50X0.50 SE1200
10166703	1	FITT.PO.BULKHEAD 2" BSP
28014203	1	LID ASSY. (3-PC.) 16" ARAG
28029803	1	CLAMP HOSE GEAR P1/2" 6708
28029903	1	CLAMP HOSE GEAR P3/4"-S1" 6712
28030103	1	CLAMP HOSE GEAR P5/4-S1.5"6724
92702103	1	HOSE R X1/2" X300PSI WP X0012"

TANK TR 300/500 W/EC (POST 93)
E0180-HIN, 01:01:16

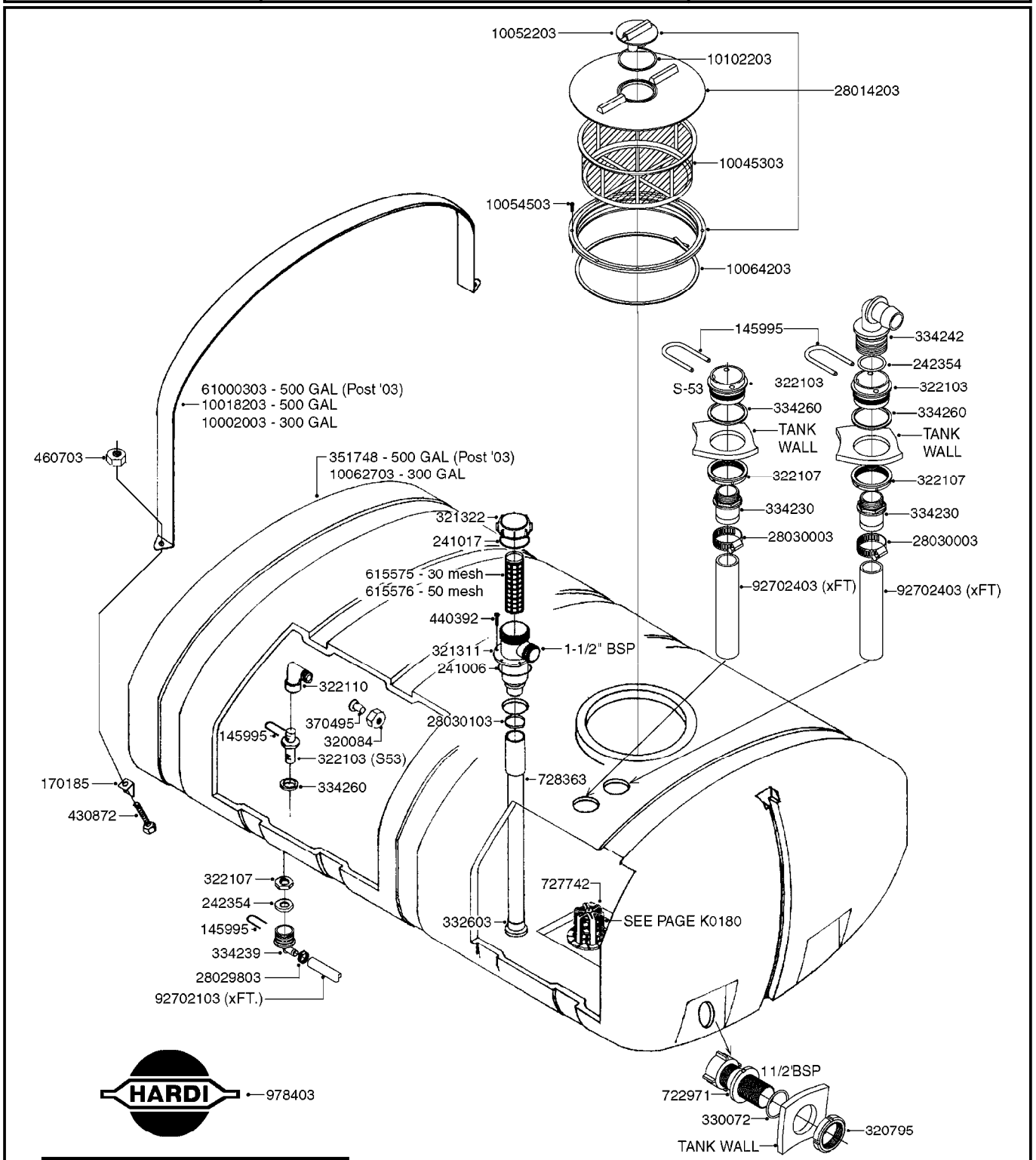

FOR CONNECTING HOSE FITTINGS, SEE SECTION L

E0180

Agroparts: www.HARDI-INTERNATIONAL.com

TANK TR 300/500 W/EC (POST 93)
E0180-HIN, 01:01:16

Date 12.08.2020 11:39

parts-n°	order qty	description
145995	1	FITT.DK S-53 FORK
170185	1	ANGLE BRACKET F. TANKSTRAP
241006	1	O-RING D79,2X5,7 NITRIL
241017	1	O-RING D74,5X3 NITRIL
242354	1	O-RING D32.2X3.0 VITON
320084	1	FITT.DK NUT 1/2" BSP
320795	1	FITT.DK NUT 1-1/2" BSP JAMB
321311	1	FILTER BODY S 80 X 4
321322	1	SCREW CAP F. S80 X 4
322103	1	FITT.DK S-53 BULKHEAD
322107	1	FITT.DK S-53 BULKHEAD NUT
322110	1	FITT.DK S-53 ELB. 1/2" BSP
330072	1	O-RING D53.5/D45.5X4
332603	1	CAP F. SUCTION TUBE
334230	1	FITT.DK S-53 STR.1"
334239	1	FITT.DK S-53 ELB.1/2"
334242	1	FITT.DK S-53 ELB.1"
334260	1	GASKET F. S-53 BULKHEAD
351748	1	TANK RAW 500 GAL
370495	1	NOZZLE INJECTOR 5066-3.0
430872	1	BOLT HEX 8.8 DEL M12X100 FT
440392	1	SCREW 6.3 X 25.0 DIN7981C TORX
460703	1	NUT HEX M12X1.75 LOCK DIN985A2 SS
615575	1	FILTER F.TOP SUCT.30 MESH GRN.
615576	1	FILTER F.TOP SUCT.50 MESH BLUE
722971	1	SAFETY VALVE SCF 217PSI(15BAR)
727742	1	TOP DRAIN CORD TYPE
728363	1	SUCTION TUBE ASSY.L=72"
978403	1	DECAL COMPANY 280 X 450
10002003	1	STRAP F. TR TANK 300 GAL.
10018203	1	TANK STRAP 500 GA.PRE'03 (92")
10045303	1	FILTER BASKET 16"
10052203	1	LID VENT ASSY
10054503	1	SCREW 3/4" SELF TAPPING
10062703	1	TANK RAW 300 GAL.84 MODEL
10064203	1	SET SEALING SPONGE 1 Ft BULK
10102203	1	GASKET F.16" LID BREATHER
28014203	1	LID ASSY. (3-PC.) 16" ARAG
28029803	1	CLAMP HOSE GEAR P1/2" 6708
28030003	1	CLAMP HOSE GEAR P1" 6716
28030103	1	CLAMP HOSE GEAR P5/4-S1.5"6724
61000303	1	TANK STRAP 500 GA POST'03(95")
92702103	1	HOSE R X1/2" X300PSI WP X0012"
92702403	1	HOSE PVC SUCT GRAY 1"

FRAME TL/ESC/TR 300 SA
E0190-HIN, 01:01:16

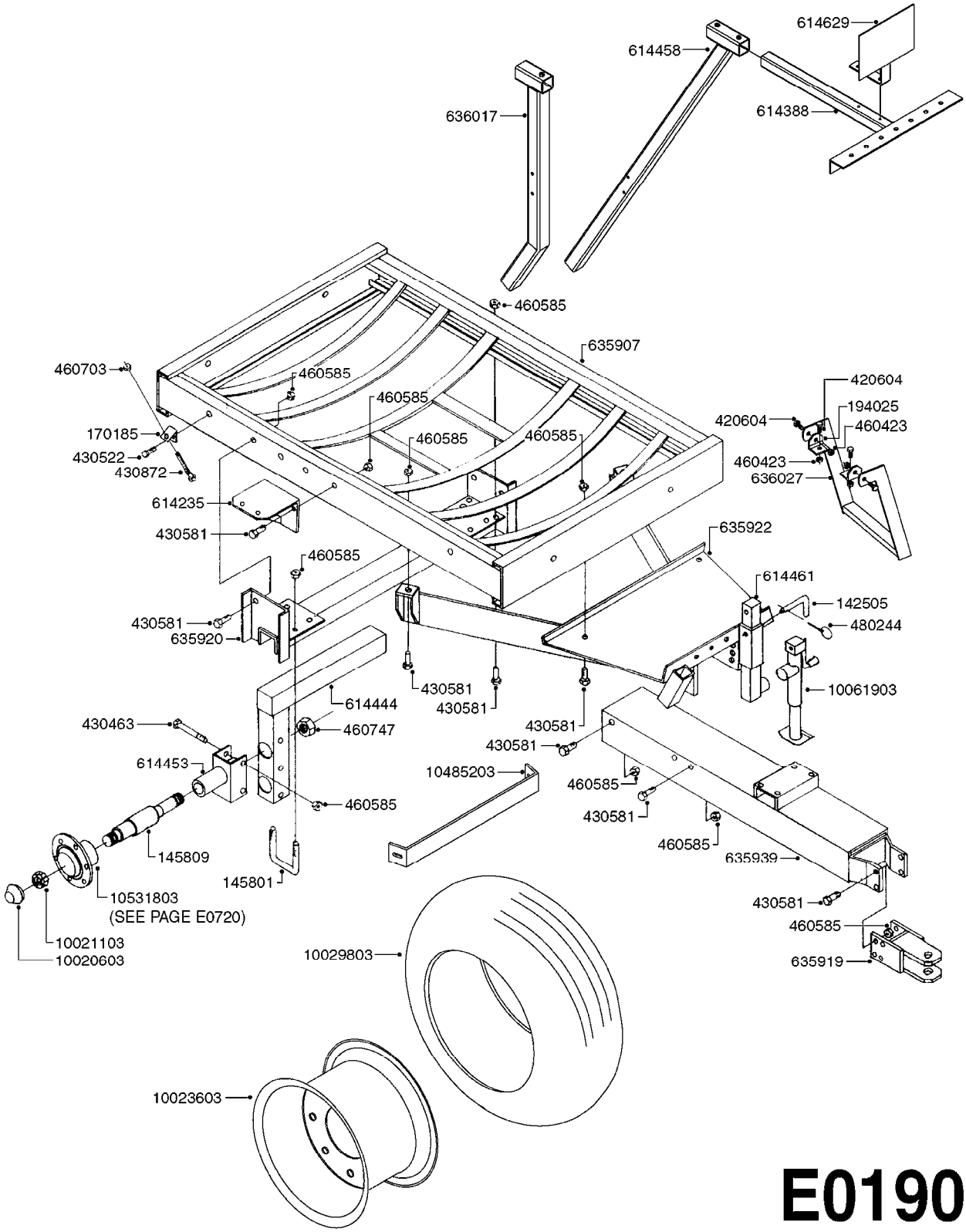

E0190

Agroparts: www.HARDI-INTERNATIONAL.com

FRAME TL/ESC/TR 300 SA
E0190-HIN, 01:01:16

Date 12.08.2020 11:39

parts-n°	order qty	description
10020603	1	DUST CAP DC13
10021103	1	NUT HEX NF 7/8 WB32
10023603	1	RIM 15 X 8 X 6 BOLT
10029803	1	TIRE & TUBE 11L15 8 PLY
10061903	1	JACK F300/500/575 5000LB
10485203	1	BRACE A FRAME TR500 FLUSH
10531803	1	HUB ASSY.COMP.F.1-3/4" SPINDLE
142505	1	LOCKING PAWL 12 X 70MM
145801	1	BOLT U
145809	1	SPINDLE 300 SINGLE
170185	1	ANGLE BRACKET F. TANKSTRAP
194025	1	BRACKET F.STEP HC650
420604	1	BOLT HEX 8.8 DEL M10X25 FT DIN933
430463	1	BOLT HEX 8.8 DEL M16X110
430522	1	BOLT HEX 8.8 DEL M12X25 FT
430581	1	BOLT HEX 8.8 DEL M16X40 FT
430872	1	BOLT HEX 8.8 DEL M12X100 FT
460423	1	NUT HEX M10X1.50 LOCK DIN985A2 SS
460585	1	LOCKING NUT M16 DIN985 A2 SS
460703	1	NUT HEX M12X1.75 LOCK DIN985A2 SS
460747	1	NUT HEX M24 LOCK
480244	1	PIN SNAP D4.5
614235	1	BRACKET EAR F SIDE BRACES (NLA
614388	1	BRACKET FOR OPER. UNIT
614444	1	AXLE INSERT 300 SINGLE
614453	1	SPINDLE HOLDER 300 SINGLE
614458	1	CONTROL POST BK TR/TL300/500
614461	1	JACK STAND ATTACHMENT
614629	1	BRACKET F. DECAL TL/TR 300/500
635907	1	FRAME F. TL/TR/ESC 300
635919	1	TONGUE CLEVIS TR300/500
635920	1	U-PROFILE 300G SINGLE AXLE
635922	1	PLATFORM & A-FRAME TR300/500
635939	1	TONGUE FOR TR/TL300/500 SHORT
636017	1	POST FOR EC CONTROL MOUNT
636027	1	STEP F.PLATFORM HC650

FRAME TL/ESC/TR 500 SA
E0200-HIN, 01:01:16

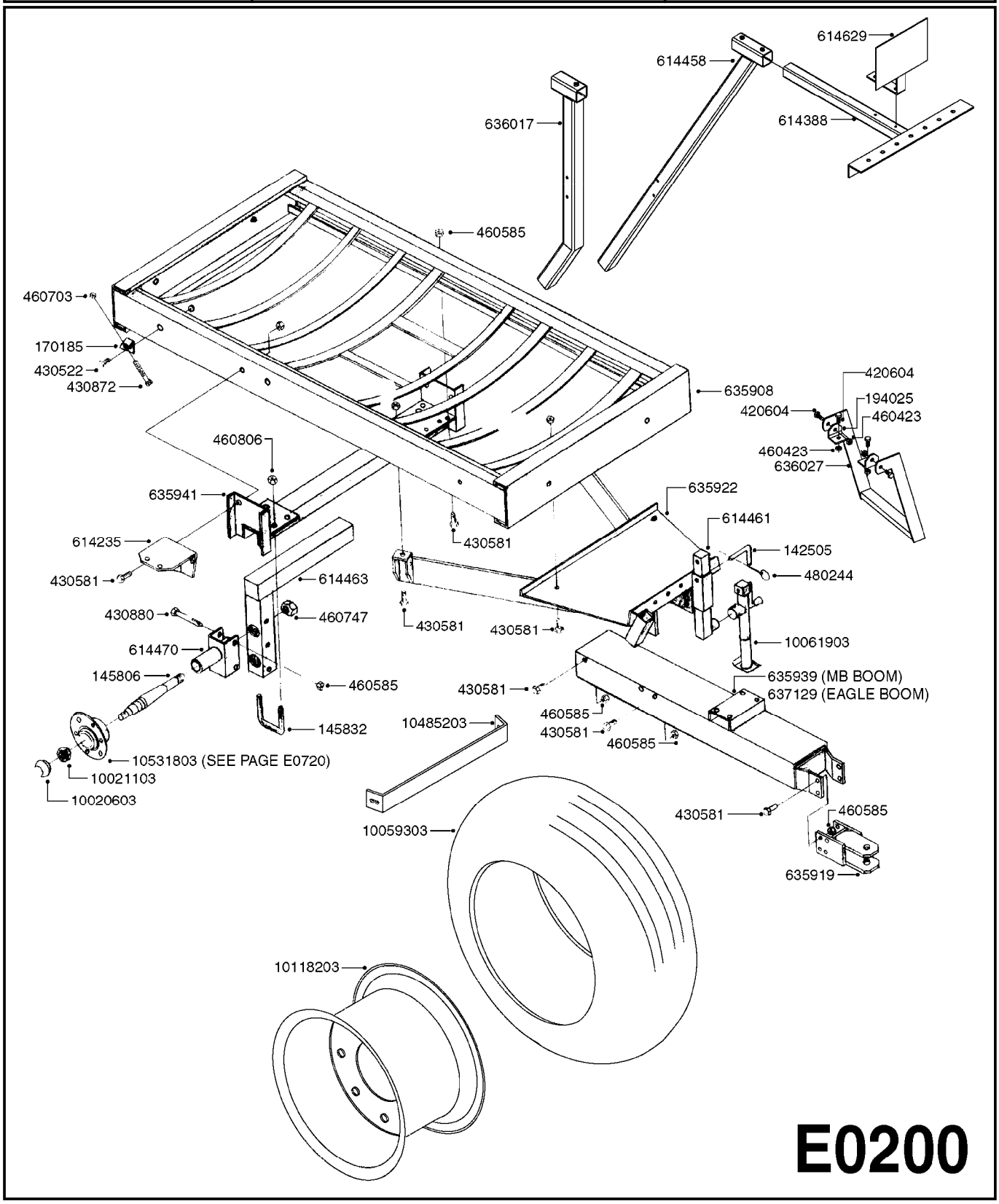

E0200

Agroparts: www.HARDI-INTERNATIONAL.com

FRAME TL/ESC/TR 500 SA
E0200-HIN, 01:01:16

Date 12.08.2020 11:39

parts-n°	order qty	description
10020603	1	DUST CAP DC13
10021103	1	NUT HEX NF 7/8 WB32
10059303	1	SUBSTITUTE 24001303
10061903	1	JACK F300/500/575 5000LB
10118203	1	RIM 15 X 10 X 6 BOLT
10485203	1	BRACE A FRAME TR500 FLUSH
10531803	1	HUB ASSY.COMP.F.1-3/4" SPINDLE
142505	1	LOCKING PAWL 12 X 70MM
145806	1	SPINDLE 500 SINGLE
145832	1	BOLT U (5-3/4"L x 4-3/4"W)
170185	1	ANGLE BRACKET F. TANKSTRAP
194025	1	BRACKET F.STEP HC650
420604	1	BOLT HEX 8.8 DEL M10X25 FT DIN933
430522	1	BOLT HEX 8.8 DEL M12X25 FT
430581	1	BOLT HEX 8.8 DEL M16X40 FT
430872	1	BOLT HEX 8.8 DEL M12X100 FT
430880	1	BOLT HEX 8.8 DEL M16X140
460423	1	NUT HEX M10X1.50 LOCK DIN985A2 SS
460585	1	LOCKING NUT M16 DIN985 A2 SS
460703	1	NUT HEX M12X1.75 LOCK DIN985A2 SS
460747	1	NUT HEX M24 LOCK
460806	1	NUT HEX M20X2.50 LOCK DIN985A2 SS
480244	1	PIN SNAP D4.5
614235	1	BRACKET EAR F SIDE BRACES (NLA
614388	1	BRACKET FOR OPER. UNIT
614458	1	CONTROL POST BK TR/TL300/500
614461	1	JACK STAND ATTACHMENT
614463	1	INSERT SINGLE AXLE 500
614470	1	SPINDLE HOLDER 500 SINGLE
614629	1	BRACKET F. DECAL TL/TR 300/500
635908	1	FRAME F. TR/ESC 500
635919	1	TONGUE CLEVIS TR300/500
635922	1	PLATFORM & A-FRAME TR300/500
635939	1	TONGUE FOR TR/TL300/500 SHORT
635941	1	U-PROFILE 500 SINGLE
636017	1	POST FOR EC CONTROL MOUNT
636027	1	STEP F.PLATFORM HC650
637129	1	TONGUE FOR 500 EAGLE/FLUSH LNG

FRAME 500 TA
E0210-HIN, 01:01:16

Date 12.08.2020 11:39

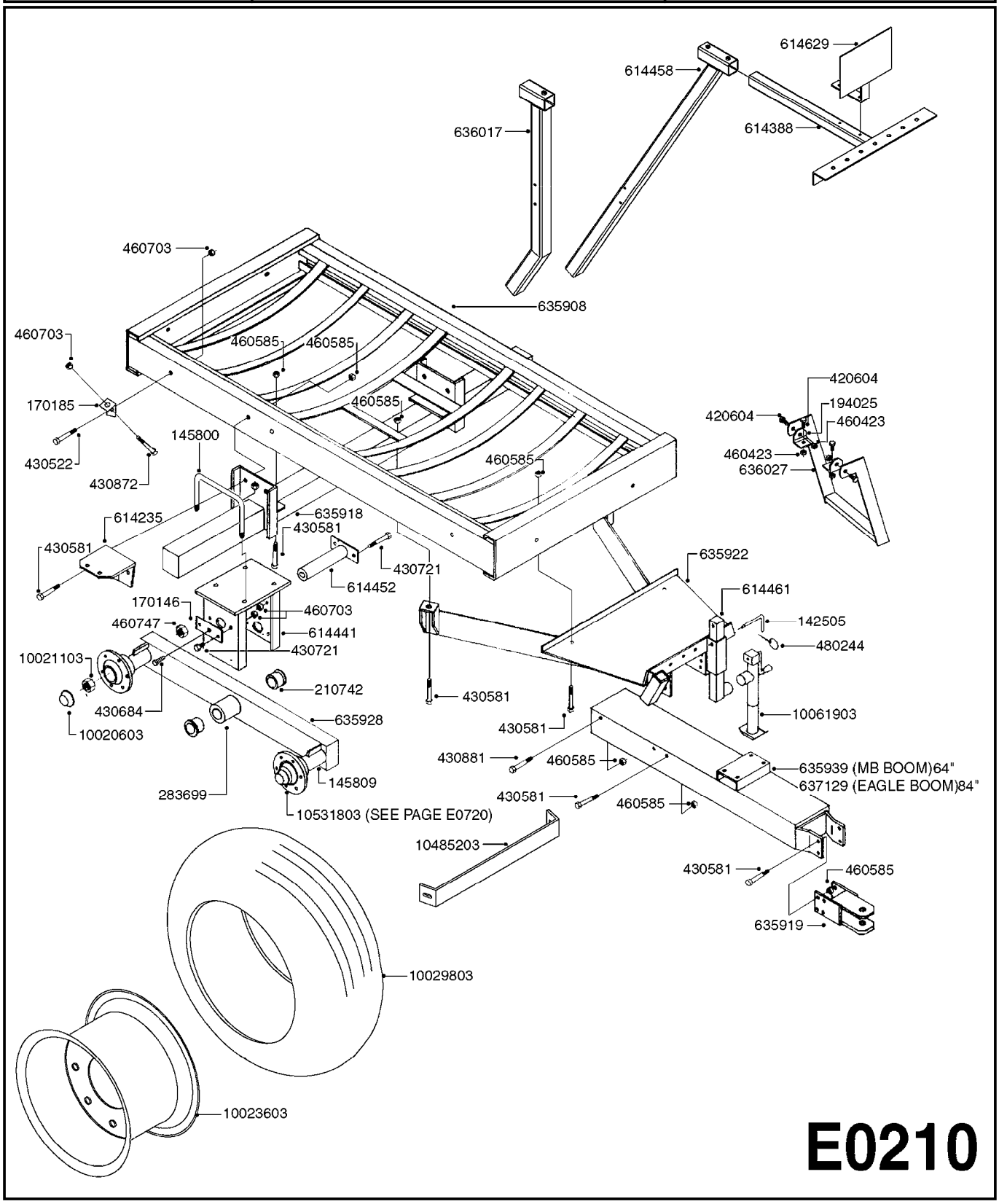

E0210

Agroparts: www.HARDI-INTERNATIONAL.com

FRAME 500 TA
E0210-HIN, 01:01:16

Date 12.08.2020 11:39

parts-n°	order qty	description
10020603	1	DUST CAP DC13
10021103	1	NUT HEX NF 7/8 WB32
10023603	1	RIM 15 X 8 X 6 BOLT
10029803	1	TIRE & TUBE 11L15 8 PLY
10061903	1	JACK F300/500/575 5000LB
10485203	1	BRACE A FRAME TR500 FLUSH
10531803	1	HUB ASSY.COMP.F.1-3/4" SPINDLE
142505	1	LOCKING PAWL 12 X 70MM
145800	1	BOLT U TR500 20mm THREAD
145809	1	SPINDLE 300 SINGLE
170146	1	PLATE F.PIN 500 TANDAM
170185	1	ANGLE BRACKET F. TANKSTRAP
194025	1	BRACKET F.STEP HC650
210742	1	BUSHING TA500
283699	1	GREASE NIPPLE M6X1
420604	1	BOLT HEX 8.8 DEL M10X25 FT DIN933
430522	1	BOLT HEX 8.8 DEL M12X25 FT
430581	1	BOLT HEX 8.8 DEL M16X40 FT
430684	1	BOLT HEX 8.8 DEL M16X30 FT
430721	1	BOLT HEX 8.8 DEL M12X40 FT
430872	1	BOLT HEX 8.8 DEL M12X100 FT
460423	1	NUT HEX M10X1.50 LOCK DIN985A2 SS
460585	1	LOCKING NUT M16 DIN985 A2 SS
460703	1	NUT HEX M12X1.75 LOCK DIN985A2 SS
460747	1	NUT HEX M24 LOCK
480244	1	PIN SNAP D4.5
614235	1	BRACKET EAR F SIDE BRACES (NLA
614388	1	BRACKET FOR OPER. UNIT
614441	1	UPRIGHT 500 TANDEM
614452	1	PIN TANDEM CENTER AXLE
614458	1	CONTROL POST BK TR/TL300/500
614461	1	JACK STAND ATTACHMENT
614629	1	BRACKET F. DECAL TL/TR 300/500
635908	1	FRAME F. TR/ESC 500
635918	1	AXLE STRUT 500 TANDEM
635919	1	TONGUE CLEVIS TR300/500
635922	1	PLATFORM & A-FRAME TR300/500
635928	1	TANDEM BEAM 500
635939	1	TONGUE FOR TR/TL300/500 SHORT
636017	1	POST FOR EC CONTROL MOUNT
636027	1	STEP F.PLATFORM HC650
637129	1	TONGUE FOR 500 EAGLE/FLUSH LNG

FRAME HC 500
E0220-HIN, 01:01:16

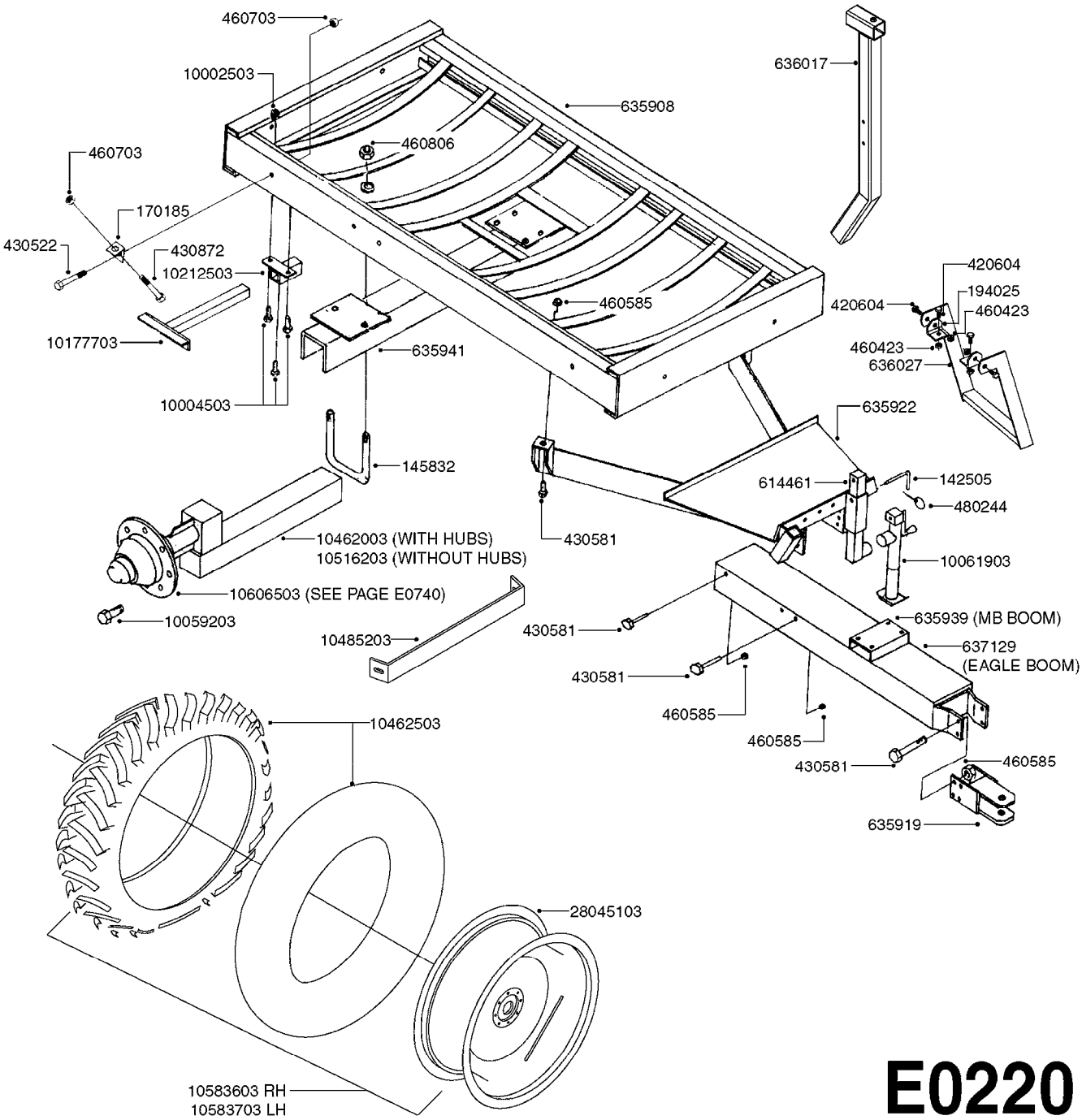

E0220

Agroparts: www.HARDI-INTERNATIONAL.com

FRAME HC 500
E0220-HIN, 01:01:16

Date 12.08.2020 11:39

parts-n°	order qty	description
142505	1	LOCKING PAWL 12 X 70MM
145832	1	BOLT U (5-3/4"L x 4-3/4"W)
170185	1	ANGLE BRACKET F. TANKSTRAP
194025	1	BRACKET F.STEP HC650
420604	1	BOLT HEX 8.8 DEL M10X25 FT DIN933
430522	1	BOLT HEX 8.8 DEL M12X25 FT
430581	1	BOLT HEX 8.8 DEL M16X40 FT
430872	1	BOLT HEX 8.8 DEL M12X100 FT
460423	1	NUT HEX M10X1.50 LOCK DIN985A2 SS
460585	1	LOCKING NUT M16 DIN985 A2 SS
460703	1	NUT HEX M12X1.75 LOCK DIN985A2 SS
460806	1	NUT HEX M20X2.50 LOCK DIN985A2 SS
480244	1	PIN SNAP D4.5
614461	1	JACK STAND ATTACHMENT
635908	1	FRAME F. TR/ESC 500
635919	1	TONGUE CLEVIS TR300/500
635922	1	PLATFORM & A-FRAME TR300/500
635939	1	TONGUE FOR TR/TL300/500 SHORT
635941	1	U-PROFILE 500 SINGLE
636017	1	POST FOR EC CONTROL MOUNT
636027	1	STEP F.PLATFORM HC650
637129	1	TONGUE FOR 500 EAGLE/FLUSH LNG
10002503	1	NUT HEX NC 1/2"
10004503	1	BOLT HEX 1/2 NC GR.5 01.50"
10059203	1	BOLT WHEEL 9/16"x1-1/4"UNF 90D
10061903	1	JACK F300/500/575 5000LB
10177703	1	SCRAPER MUD ICM VS 500
10212503	1	BKT.MUD SCRAPER ICM 500
10462003	1	AXLE INSERT.ASSY.HC500/650
10462503	1	TIRE 11.2" X 38" 4 PLY TUBE L.
10485203	1	BRACE A FRAME TR500 FLUSH
10516203	1	INSERT W/M 500/650HC W/SPINDLE
10583603	1	TIRE ASSY 11.2X38 RH 8"BC
10583703	1	TIRE ASSY 11.2X38 LH 8"BC
10606503	1	HUB ASSY.NAV550/800/1000 HC
28045103	1	RIM 38X10 8/8/6 4.18-OS GRAY

TANK PASTURE 300/550
E0230-HIN, 01:01:16

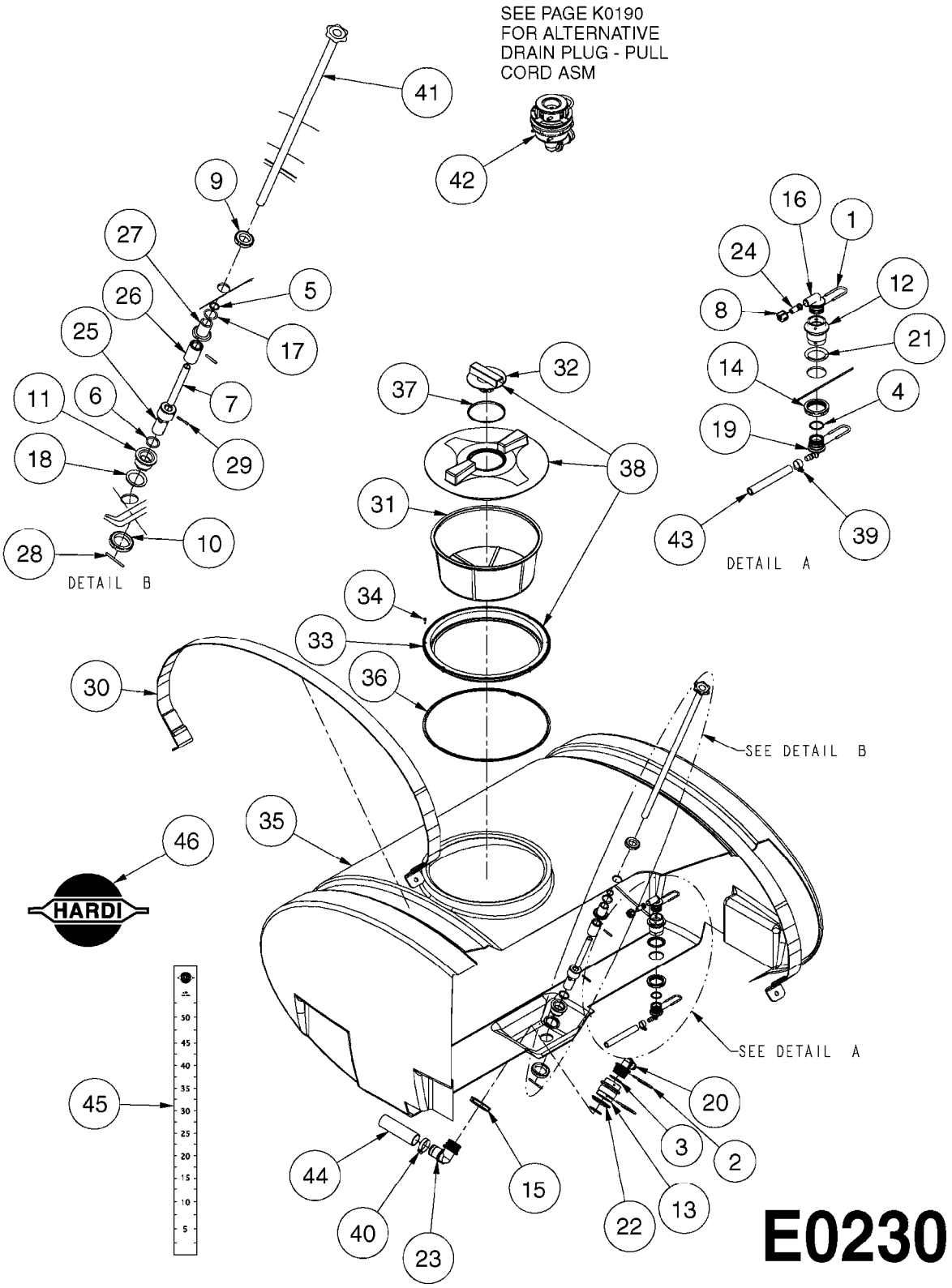

Agroparts: www.HARDI-INTERNATIONAL.com

TANK PASTURE 300/550
E0230-HIN, 01:01:16

Date 12.08.2020 11:39

Pos.	parts-nº	order qty	description
1	145995	1	FITT.DK S-53 FORK
2	145996	1	FITT.DK S-67 FORK
3	241973	1	O-RING Ø3 X 44.2 70 SHORES NITRIL
4	242109	1	O-RING D32.2x3.0
5	242179	1	O-RING D23.0 X 3.0 NITRL
6	242543	1	O-RING D38/D30X4 VITON
7	251923	1	HOSE HIFLEX L=150MM
8	320084	1	FITT.DK NUT 1/2" BSP
9	320471	1	FITT.DK NUT 1" BSP JAMB
10	320795	1	FITT.DK NUT 1-1/2" BSP JAMB
11	321333	1	FITT.DK BULK 1-1/2" X 1"F BSP
12	322103	1	FITT.DK S-53 BULKHEAD
13	322104	1	FITT.DK S-67 BULKHEAD
14	322107	1	FITT.DK S-53 BULKHEAD NUT
15	322108	1	FITT.DK S-67 BULKHEAD NUT
16	322110	1	FITT.DK S-53 ELB. 1/2" BSP
17	332577	1	O-RING D38/D30X4 F.1" PUR.
18	332581	1	GASKET F. 1-1/2" BSP CAPNUT.
19	334239	1	FITT.DK S-53 ELB.1/2"
20	334243	1	FITT.DK S-67 ELB.1"
21	334260	1	GASKET F. S-53 BULKHEAD
22	334261	1	GASKET F. S-67 BULKHEAD
23	334445	1	FITT.DK S-67 ELB.1-1/2"
24	370495	1	NOZZLE INJECTOR 5066-3.0
25	390215	1	DRAIN SCREW 1' SPEC
26	390216	1	CONNECTOR F. HOSE/TUBE DRAIN
27	390878	1	LEAD-IN MACHINED 1"
28	480487	1	PIN M5X60 SLOTTED GALV
29	480719	1	PIN D5 X 36 STAINLESS
30	10002003	1	STRAP F. TR TANK 300 GAL.
30	61000303	1	TANK STRAP 500 GA POST'03(95")
31	10045303	1	FILTER BASKET 16"
32	10052203	1	LID VENT ASSY
33	10052403	1	LID RING THREADED F.TANK
34	10054503	1	SCREW 3/4" SELF TAPPING
35	10062703	1	TANK RAW 300 GAL.84 MODEL
35	351748	1	TANK RAW 500 GAL
36	10064203	1	SET SEALING SPONGE 1 Ft BULK
37	10102203	1	GASKET F.16" LID BREATHER
38	28014203	1	LID ASSY. (3-PC.) 16" ARAG
39	28029803	1	CLAMP HOSE GEAR P1/2" 6708
40	28030103	1	CLAMP HOSE GEAR P5/4-S1.5"6724
41	70003403	1	DRAIN ASSEMBLY TORO 300T
42	72351400	1	DRAIN,S67 TOP
43	92702103	1	HOSE R X1/2" X300PSI WP X0012"
44	92714603	1	HOSE PVC SUCTION X 1.5 X 0012"
45	978057	1	DECAL S/G TANK 500GAL-99
46	97811600	1	DECAL COMPANY 335MM X 210MM

Agroparts: www.HARDI-INTERNATIONAL.com

FRAME PASTURE SPRAYER 300/550
E0240-HIN, 01:01:16

Page 0

Date 12.08.2020 11:39

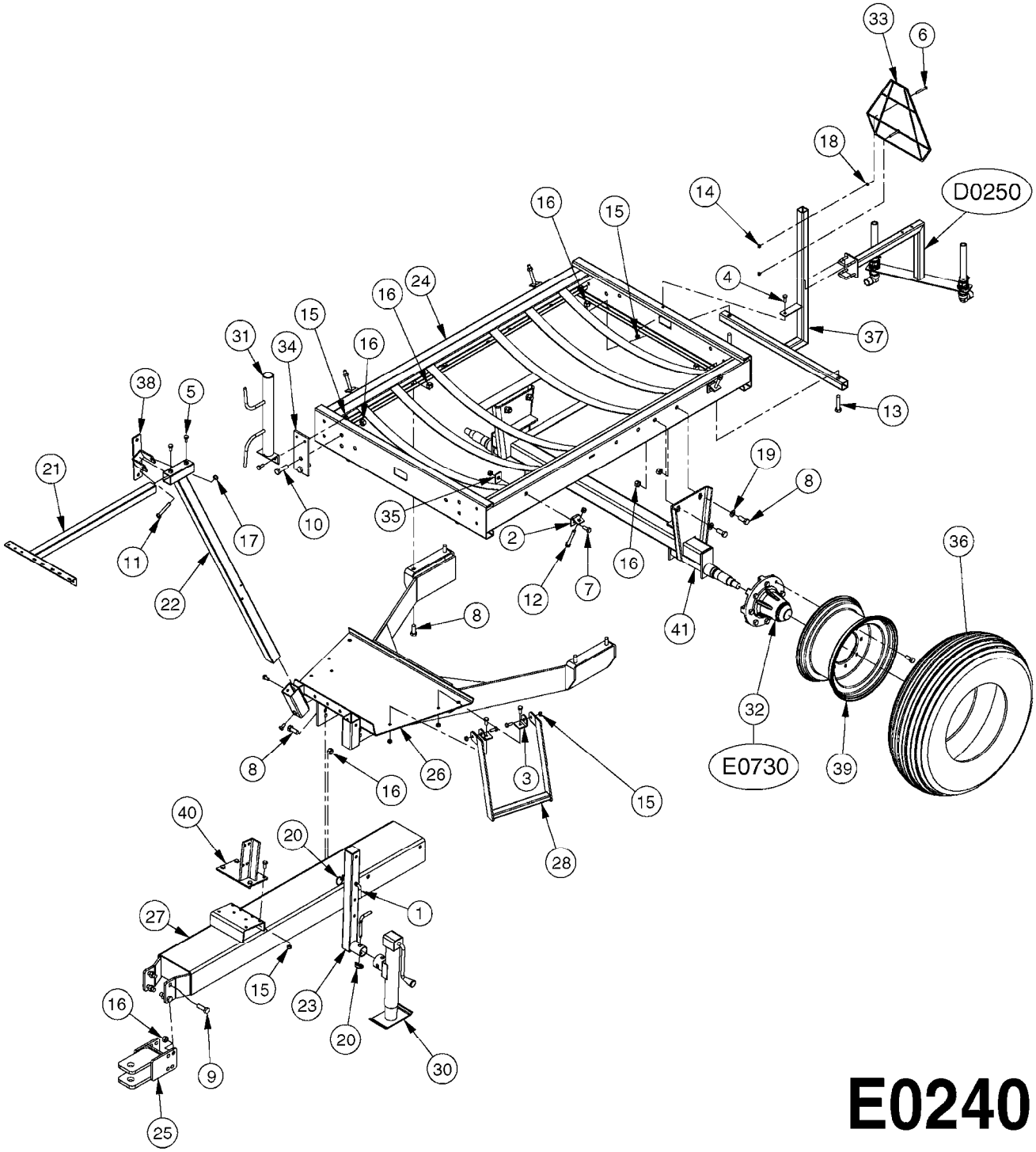

E0240

Agroparts: www.HARDI-INTERNATIONAL.com

FRAME PASTURE SPRAYER 300/550
E0240-HIN, 01:01:16

Date 12.08.2020 11:39

Pos.	parts-nº	order qty	description
1	142505	1	LOCKING PAWL 12 X 70MM
2	170185	1	ANGLE BRACKET F. TANKSTRAP
3	194025	1	BRACKET F.STEP HC650
4	420604	1	BOLT HEX 8.8 DEL M10X25 FT DIN933
5	420626	1	BOLT HEX 8.8 DEL M10X20 FT
6	421024	1	BOLT HEX 8.8 DEL M8X60
7	430286	1	BOLT HEX 8.8 DEL M12X30 FT
8	430581	1	BOLT HEX 8.8 DEL M16X40 FT
9	430637	1	BOLT HEX 8.8 DEL M16X50 FT
10	430765	1	BOLT HEX 8.8 DEL M16X55
11	430802	1	BOLT HEX 8.8 DEL M12X75
12	430872	1	BOLT HEX 8.8 DEL M12X100 FT
13	430915	1	BOLT HEX 8.8 DEL M16X70
14	460143	1	LOCK NUT M8 SST A2 DIN985
15	460423	1	NUT HEX M10X1.50 LOCK DIN985A2 SS
16	460585	1	LOCKING NUT M16 DIN985 A2 SS
17	460703	1	NUT HEX M12X1.75 LOCK DIN985A2 SS
18	471126	1	WASHER, M8, Ø16/ 8.4X 1.6, SS
19	471128	1	WASHER, M16, Ø30/17.0X 3.0, SS
20	480244	1	PIN SNAP D4.5
21	614388	1	BRACKET FOR OPER. UNIT
22	614458	1	CONTROL POST BK TR/TL300/500
23	614461	1	JACK STAND ATTACHMENT
24	635907	1	FRAME F. TL/TR/ESC 300 PASTURE SPRAYER 300
24	635908	1	FRAME F. TR/ESC 500 PASTURE SPRAYER 550
25	635919	1	TONGUE CLEVIS TR300/500
26	635922	1	PLATFORM & A-FRAME TR300/500
27	635939	1	TONGUE FOR TR/TL300/500 SHORT
28	636027	1	STEP F.PLATFORM HC650
29	10059203	1	BOLT WHEEL 9/16"x1-1/4"UNF 90D
30	10061903	1	JACK F300/500/575 5000LB
31	10179403	1	WRAP WELDMENT FOR HI101789
32	10531903	1	HUB ASSY.COMP.F.2-1/8" SPINDLE
33	10602403	1	SMV SIGN MOUNT KIT
34	16057303	1	PLATE F.HANDGUN MNT.BRKT.F.PS
35	17002800	1	PLATE 5.0X35X50 /D16.2
36	24002103	1	TIRE 11LX15 12-PLY RIB
37	61005003	1	NOZZLE MOUNTING BRACKET PS300 PASTURE SPRAYER 300
37	63022203	1	NOZZLE MOUNTING BRACKET PS500 PASTURE SPRAYER 550
38	61005503	1	BRKT.F.CLEAN WATER TANK PS
39	61005603	1	RIM 15X8 8-BOLT
40	61008803	1	ACE PUMP BRACKET F. 300/500
41	70038003	1	AXLE ASSY. 300/500 PS

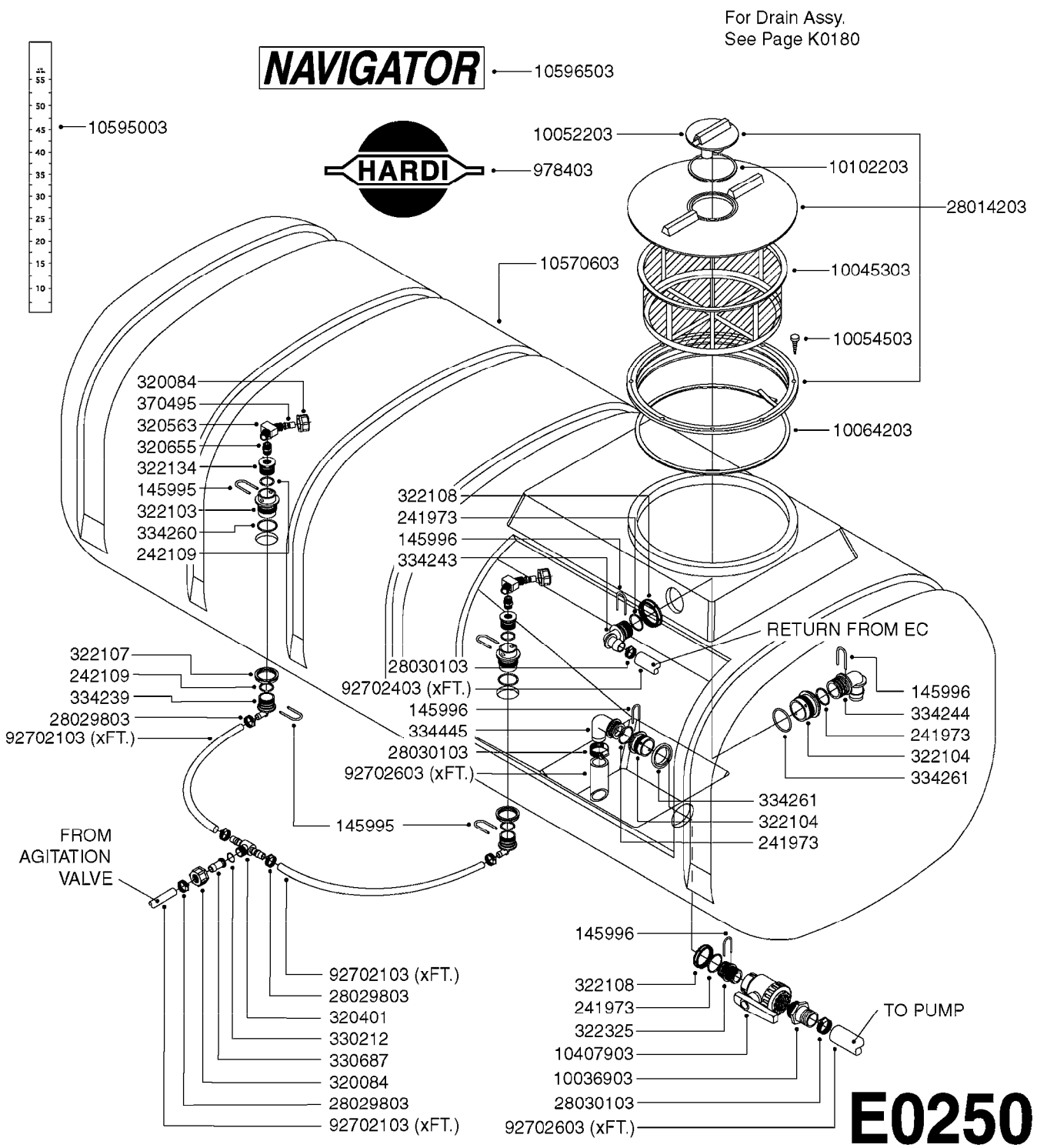
For Drain Assy.
See Page K0180
NAVIGATOR
10596503
10595003
HARDI
978403
10052203
10102203
28014203
10570603
10045303
10054503
10064203
320084
370495
320563
320655
322134
145995
322103
334260
242109
322108
241973
145996
334243
RETURN FROM EC
322107
242109
334239
28029803
92702103 (xFT.)
28030103
92702403 (xFT.)
145996
334445
28030103
92702603 (xFT.)
145996
334244
241973
322104
334261
334261
322104
241973
145995
FROM
AGITATION
VALVE
145996
92702103 (xFT.)
28029803
320401
330212
330687
320084
28029803
92702103 (xFT.)
322108
241973
322325
10407903
10036903
28030103
92702603 (xFT.)
TO PUMP
E0250

Agroparts: www.HARDI-INTERNATIONAL.com

TANK 550 NAV/NAV-M CENTRIFUGAL
E0250-HIN, 01:01:16

Date 12.08.2020 11:39

parts-n°	order qty	description
145995	1	FITT.DK S-53 FORK
145996	1	FITT.DK S-67 FORK
241973	1	O-RING Ø3 X 44.2 70 SHORES NITRIL
242109	1	O-RING D32.2x3.0
320084	1	FITT.DK NUT 1/2" BSP
320401	1	FITT.DK TEE 1/2X1/2HB X1/2"BSP
320563	1	FITT.DK 3 WAY 1/2" 110 DEG.
320655	1	FITT.DK HN 1/2"-1/2" BSP
322103	1	FITT.DK S-53 BULKHEAD
322104	1	FITT.DK S-67 BULKHEAD
322107	1	FITT.DK S-53 BULKHEAD NUT
322108	1	FITT.DK S-67 BULKHEAD NUT
322134	1	FITT.DK S-53THREAD INS.1/2"BSP
322325	1	FITT.DK S-67 X 1-1/2"BSP LONG
330212	1	O-RING D19/D14X2.4 F.1/2"NUT
330687	1	FITT.DK HB 1/2" F. 1/2" NUT
334239	1	FITT.DK S-53 ELB.1/2"
334243	1	FITT.DK S-67 ELB.1"
334244	1	FITT.DK S-67 ELB.1-1/4"
334260	1	GASKET F. S-53 BULKHEAD
334261	1	GASKET F. S-67 BULKHEAD
334445	1	FITT.DK S-67 ELB.1-1/2"
370495	1	NOZZLE INJECTOR 5066-3.0
978403	1	DECAL COMPANY 280 X 450
10036903	1	FITT.PO.HB 1.50X1.50 IMB1212
10045303	1	FILTER BASKET 16"
10052203	1	LID VENT ASSY
10054503	1	SCREW 3/4" SELF TAPPING
10064203	1	SET SEALING SPONGE 1 Ft BULK
10102203	1	GASKET F.16" LID BREATHER
10407903	1	BALL VALVE 1-1/2" MCPHEE
10570603	1	TANK RAW NAV.550 GAL.
10595003	1	DECAL SCALE NAV 550 F.TANK
10596503	1	DECAL NAVIGATOR LABEL
28014203	1	LID ASSY. (3-PC.) 16" ARAG
28029803	1	CLAMP HOSE GEAR P1/2" 6708
28030103	1	CLAMP HOSE GEAR P5/4-S1.5"6724
92702103	1	HOSE R X1/2" X300PSI WP X0012"
92702403	1	HOSE PVC SUCT GRAY 1"
92702603	1	HOSE PVC SUCT GRAY 1-1/2"

TANK 550 NAV & NAV-M DIAPHRAGM
E0260-HIN, 01:01:16

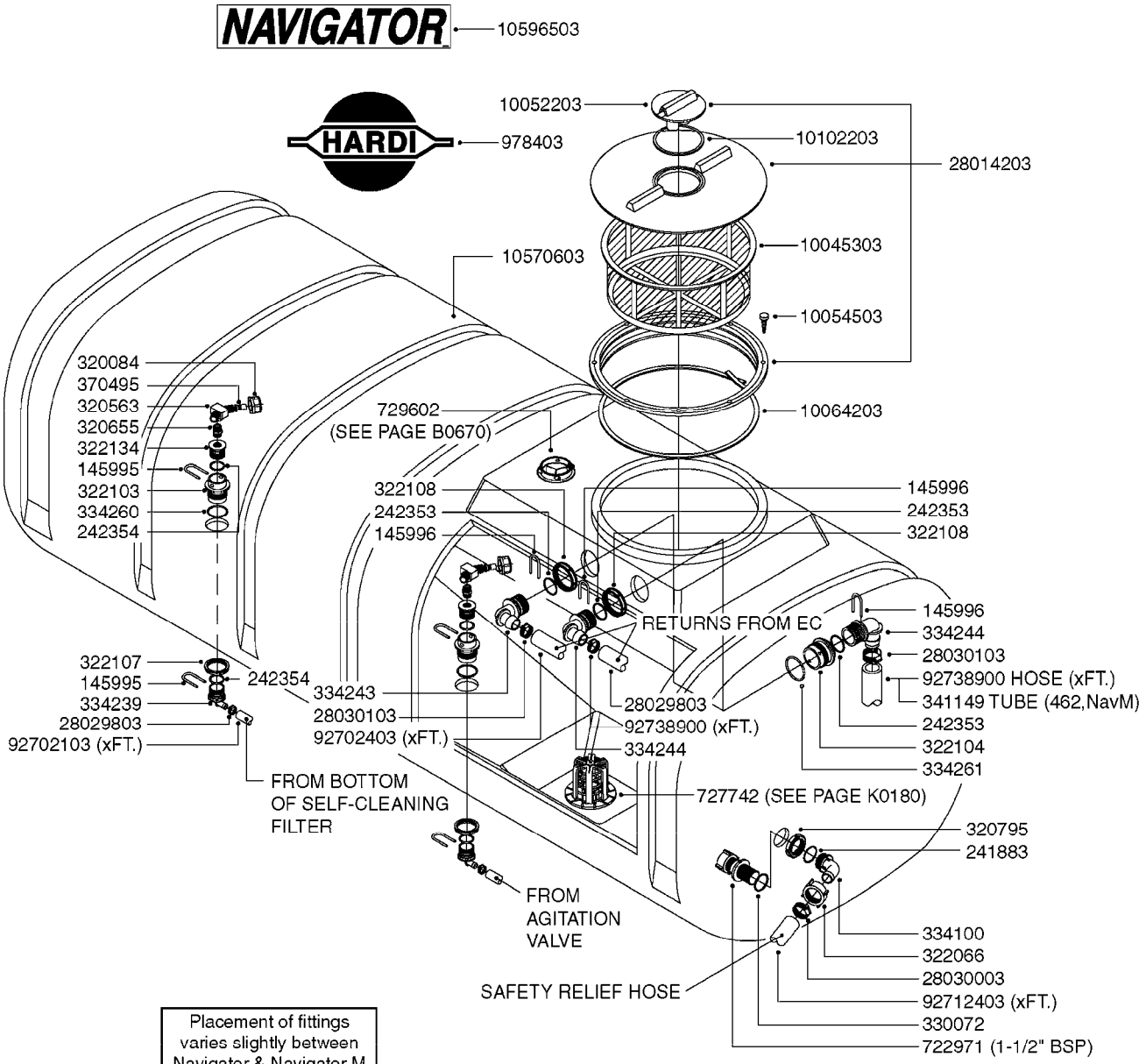

E0260

TANK 550 NAV & NAV-M DIAPHRAGM
E0260-HIN, 01:01:16

Date 12.08.2020 11:39

parts-n°	order qty	description
145995	1	FITT.DK S-53 FORK
145996	1	FITT.DK S-67 FORK
241883	1	O-RING 3 X 39.2 NITRIL
242353	1	O-RING 3 X 44.2 VITON
242354	1	O-RING D32.2X3.0 VITON
320084	1	FITT.DK NUT 1/2" BSP
320563	1	FITT.DK 3 WAY 1/2" 110 DEG.
320655	1	FITT.DK HN 1/2"-1/2" BSP
320795	1	FITT.DK NUT 1-1/2" BSP JAMB
322066	1	FITT.DK S-56 NUT
322103	1	FITT.DK S-53 BULKHEAD
322104	1	FITT.DK S-67 BULKHEAD
322107	1	FITT.DK S-53 BULKHEAD NUT
322108	1	FITT.DK S-67 BULKHEAD NUT
322134	1	FITT.DK S-53THREAD INS.1/2"BSP
330072	1	O-RING D53.5/D45.5X4
334100	1	FITT.DK S-61 ELB.1" 110 DEG.
334239	1	FITT.DK S-53 ELB.1/2"
334243	1	FITT.DK S-67 ELB.1"
334244	1	FITT.DK S-67 ELB.1-1/4"
334260	1	GASKET F. S-53 BULKHEAD
334261	1	GASKET F. S-67 BULKHEAD
341149	1	RETURN TUBE Ø40 L=2000
370495	1	NOZZLE INJECTOR 5066-3.0
722971	1	SAFETY VALVE SCF 217PSI(15BAR)
727742	1	TOP DRAIN CORD TYPE
729602	1	TOP SUCTION KIT NAV 2"
978403	1	DECAL COMPANY 280 X 450
10045303	1	FILTER BASKET 16"
10052203	1	LID VENT ASSY
10054503	1	SCREW 3/4" SELF TAPPING
10064203	1	SET SEALING SPONGE 1 Ft BULK
10102203	1	GASKET F.16" LID BREATHER
10570603	1	TANK RAW NAV.550 GAL.
10596503	1	DECAL NAVIGATOR LABEL
28014203	1	LID ASSY. (3-PC.) 16" ARAG
28029803	1	CLAMP HOSE GEAR P1/2" 6708
28030003	1	CLAMP HOSE GEAR P1" 6716
28030103	1	CLAMP HOSE GEAR P5/4-S1.5"6724
92702103	1	HOSE R X1/2" X300PSI WP X0012"
92702403	1	HOSE PVC SUCT GRAY 1"
92712403	1	HOSE R X1" X300PSI WP X0012"
92738900	1	HOSE R X PVC X 1-1/4" 0012"

FRAME NAVIGATOR HC 550
E0270-HIN, 11:05:18

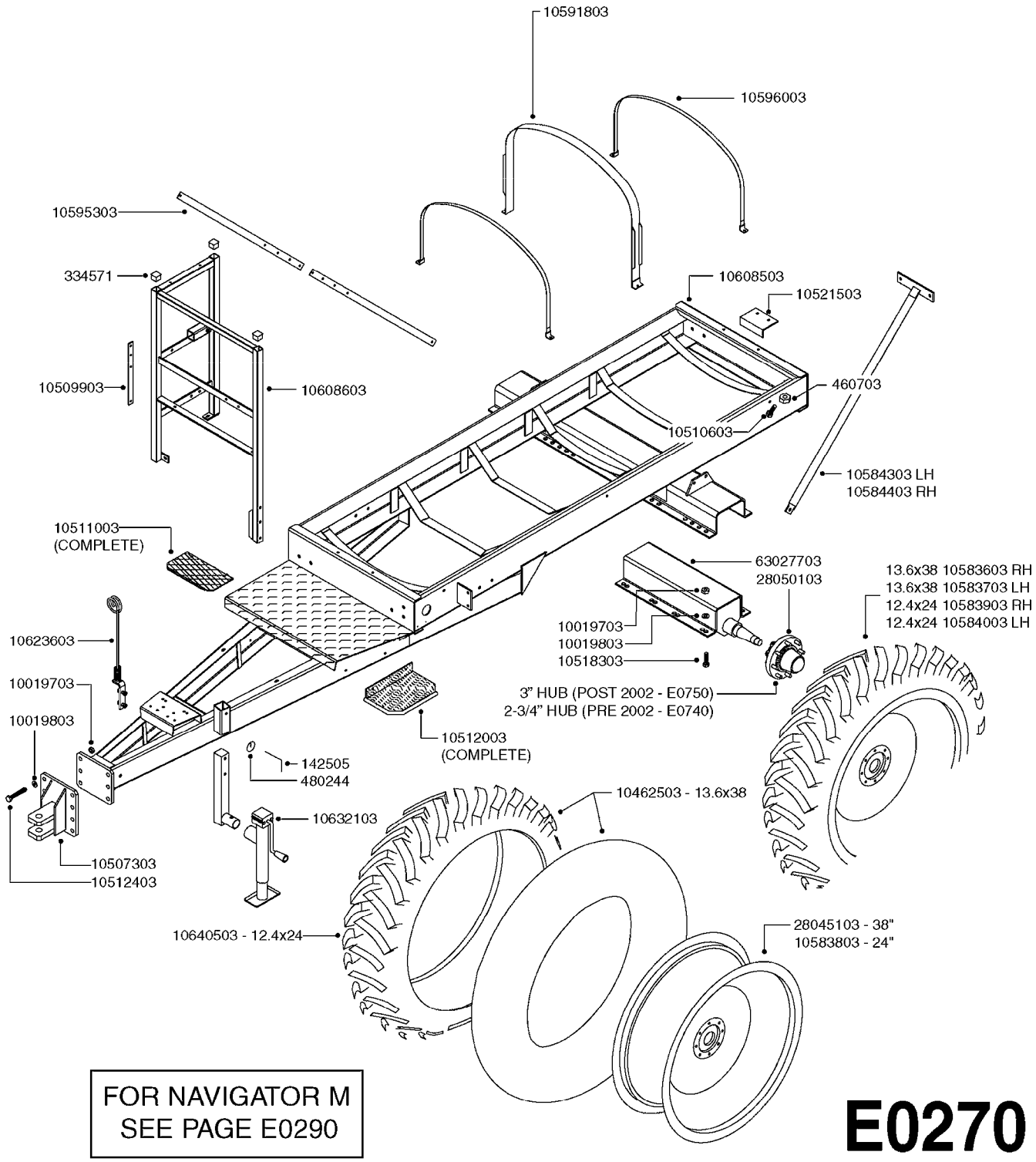

FOR NAVIGATOR M
SEE PAGE E0290

Agroparts: www.HARDI-INTERNATIONAL.com

FRAME NAVIGATOR HC 550
E0270-HIN, 11:05:18

Date 12.08.2020 11:39

parts-n°	order qty	description
142505	1	LOCKING PAWL 12 X 70MM
334571	1	PLUG 40x40x2 F.SQ.TUBE
460703	1	NUT HEX M12X1.75 LOCK DIN985A2 SS
480244	1	PIN SNAP D4.5
10019703	1	NUT HEX NC FHN 3/4-10 Z 5
10019803	1	WASHER LOCK L/W Z 3/4"
10462503	1	TIRE 11.2" X 38" 4 PLY TUBE L.
10507303	1	CLEVIS NAV.550/800/1000 GAL.
10509903	1	FLATBAR F.FILTER
10510603	1	BOLT F.ANCHOR STRAP
10511003	1	FRONT STEP ASSY.550/800/1000
10512003	1	SIDE STEP ASSY.550/800/1000
10512403	1	BOLT HEX 3/4 NC GR.8 02.25"
10518303	1	BOLT HEX 2&3/4 NC GR.8 3.00"
10521503	1	NAV TANK STOP BKT.KIT
10583603	1	TIRE ASSY 11.2X38 RH 8"BC
10583703	1	TIRE ASSY 11.2X38 LH 8"BC
10583803	1	RIM 24X10X8"BC 4-1/8"NEG OFFS
10583903	1	TIRE ASSY 12.4X24X8"BC RH TL
10584003	1	TIRE ASSY 12.4X24X8"BC LH TL
10584303	1	SIDE BRACE 550 L.H.
10584403	1	SIDE BRACE 550 R.H.
10591803	1	STRAP F. TANK REINFOR.550 NAV
10595303	1	FLATBAR SIDE STRAP F.NAV550
10596003	1	STRAP F.NAV TANK 550GAL L=86.2
10608503	1	FRAME NAVIGATOR 550-98
10608603	1	HANDRAIL NAV. 550-98
10623603	1	CABLE & HOSE HOLDER NAV.
10632103	1	JACK F RANGER 5000LB
10640503	1	TIRE 12.4 X 24" 6 PLY R1
28045103	1	RIM 38X10 8/8/6 4.18-OS GRAY
28050103	1	HUB F 3" 758 7500# PACKAGE
63027703	1	AXLE RANGER 60-98

FRAME NAVIGATOR STA 550
E0280-HIN, 01:01:16

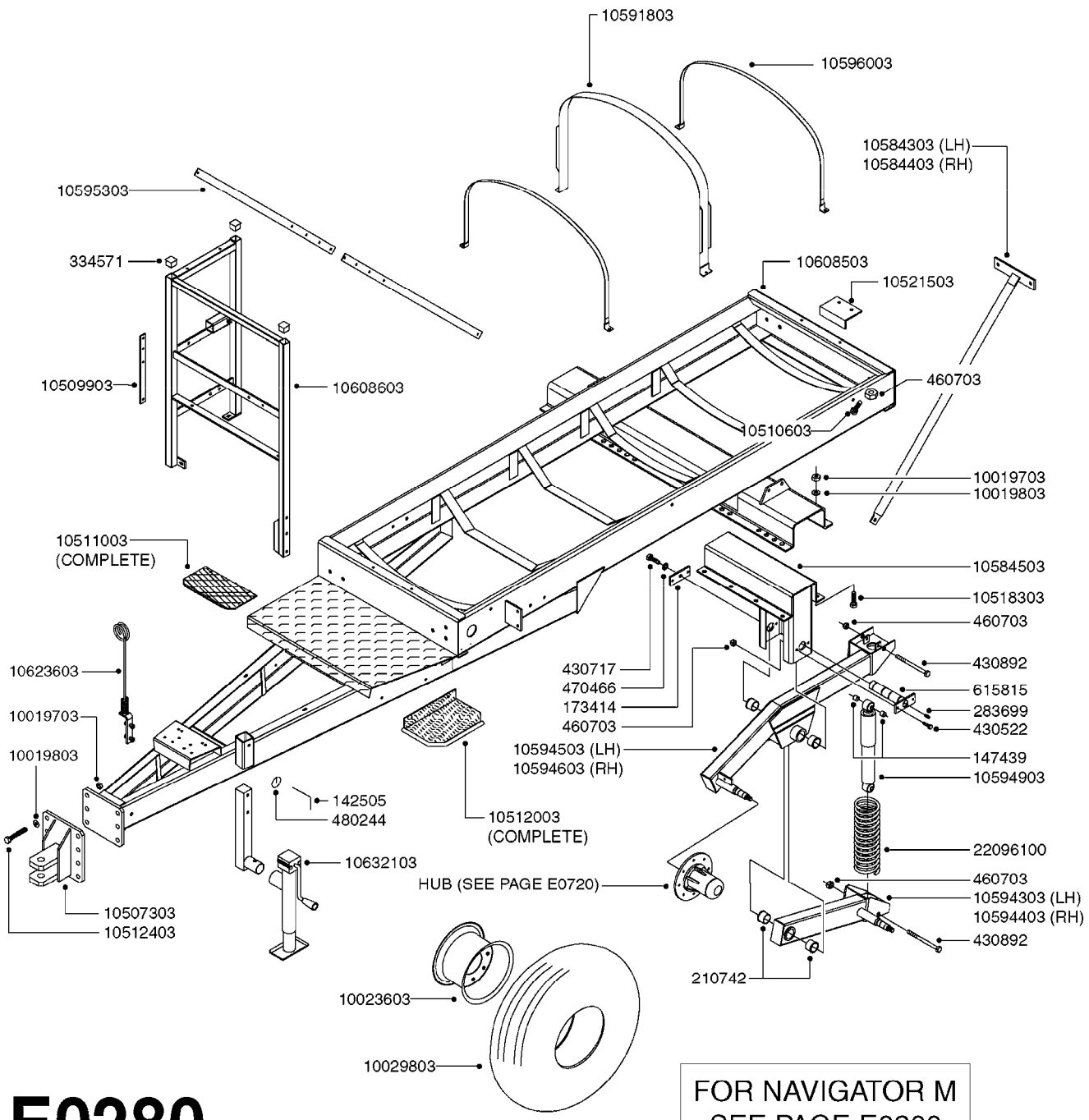

E0280

FOR NAVIGATOR M
SEE PAGE E0300

Agroparts: www.HARDI-INTERNATIONAL.com

FRAME NAVIGATOR STA 550
E0280-HIN, 01:01:16

Date 12.08.2020 11:39

parts-n°	order qty	description
142505	1	LOCKING PAWL 12 X 70MM
147439	1	BUSHING 019, O/013 L=20
173414	1	FLATBAR 60x10 L=130/2x013-1x01
210742	1	BUSHING TA500
283699	1	GREASE NIPPLE M6X1
334571	1	PLUG 40x40x2 F.SQ.TUBE
430522	1	BOLT HEX 8.8 DEL M12X25 FT
430717	1	BOLT HEX 8.8 RAW M12x40
430892	1	BOLT HEX 8.8 DEL M12X110
460703	1	NUT HEX M12X1.75 LOCK DIN985A2 SS
470466	1	WASHER D21.1/D12.2X2.5 LOCK
480244	1	PIN SNAP D4.5
615815	1	BEARING BOLT 050 L=336
10019703	1	NUT HEX NC FHN 3/4-10 Z 5
10019803	1	WASHER LOCK L/W Z 3/4"
10023603	1	RIM 15 X 8 X 6 BOLT
10029803	1	TIRE & TUBE 11L15 8 PLY
10507303	1	CLEVIS NAV.550/800/1000 GAL.
10509903	1	FLATBAR F.FILTER
10510603	1	BOLT F.ANCHOR STRAP
10511003	1	FRONT STEP ASSY.550/800/1000
10512003	1	SIDE STEP ASSY.550/800/1000
10512403	1	BOLT HEX 3/4 NC GR.8 02.25"
10518303	1	BOLT HEX 2&3/4 NC GR.8 3.00"
10521503	1	NAV TANK STOP BKT.KIT
10584303	1	SIDE BRACE 550 L.H.
10584403	1	SIDE BRACE 550 R.H.
10584503	1	AXLE INSERT S.T.A.
10591803	1	STRAP F. TANK REINFOR.550 NAV
10594303	1	STA LOWER BEAMW/M W.SPINDLE LH
10594403	1	STA LOWER BEAMW/M W/SPINDLE RH
10594503	1	STA TOP BEAM W/M W/SPINDLE LH
10594603	1	STA TOP BEAM W/M W/SPINDLE RH
10594903	1	SHOCK ABSORBER STA
10595303	1	FLATBAR SIDE STRAP F.NAV550
10596003	1	STRAP F.NAV TANK 550GAL L=86.2
10608503	1	FRAME NAVIGATOR 550-98
10608603	1	HANDRAIL NAV. 550-98
10623603	1	CABLE & HOSE HOLDER NAV.
10632103	1	JACK F RANGER 5000LB
22096100	1	SPRING D146/20 BLACK

FRAME - NAVIGATOR M HC 550
E0290-HIN, 11:05:18

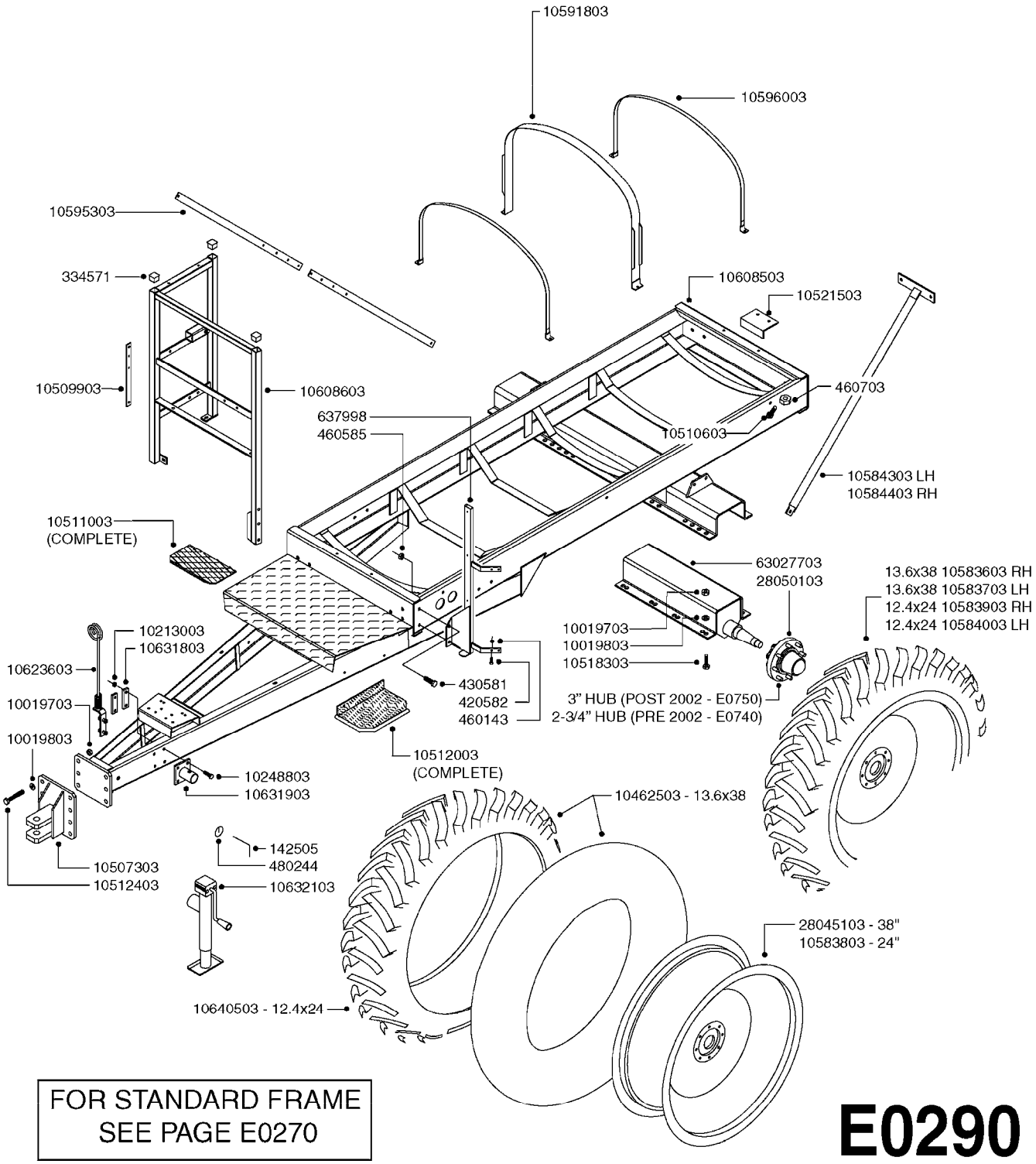

FOR STANDARD FRAME
SEE PAGE E0270

Agroparts: www.HARDI-INTERNATIONAL.com

FRAME - NAVIGATOR M HC 550
E0290-HIN, 11:05:18

Date 12.08.2020 11:39

parts-n°	order qty	description
142505	1	LOCKING PAWL 12 X 70MM
334571	1	PLUG 40x40x2 F.SQ.TUBE
420582	1	BOLT HEX 8.8 DEL M8X20 FT A2
430581	1	BOLT HEX 8.8 DEL M16X40 FT
460143	1	LOCK NUT M8 SST A2 DIN985
460585	1	LOCKING NUT M16 DIN985 A2 SS
460703	1	NUT HEX M12X1.75 LOCK DIN985A2 SS
480244	1	PIN SNAP D4.5
637998	1	MANIFOLD BKT. NAVIGATOR
10019703	1	NUT HEX NC FHN 3/4-10 Z 5
10019803	1	WASHER LOCK L/W Z 3/4"
10213003	1	NUT HEX NC (NYLON LOCK) 7/16"
10248803	1	BOLT HEX 7/16 NC GR.2 02.00"
10462503	1	TIRE 11.2" X 38" 4 PLY TUBE L.
10507303	1	CLEVIS NAV.550/800/1000 GAL.
10509903	1	FLATBAR F.FILTER
10510603	1	BOLT F.ANCHOR STRAP
10511003	1	FRONT STEP ASSY.550/800/1000
10512003	1	SIDE STEP ASSY.550/800/1000
10512403	1	BOLT HEX 3/4 NC GR.8 02.25"
10518303	1	BOLT HEX 2&3/4 NC GR.8 3.00"
10521503	1	NAV TANK STOP BKT.KIT
10583603	1	TIRE ASSY 11.2X38 RH 8"BC
10583703	1	TIRE ASSY 11.2X38 LH 8"BC
10583803	1	RIM 24X10X8"BC 4-1/8"NEG OFFS
10583903	1	TIRE ASSY 12.4X24X8"BC RH TL
10584003	1	TIRE ASSY 12.4X24X8"BC LH TL
10584303	1	SIDE BRACE 550 L.H.
10584403	1	SIDE BRACE 550 R.H.
10591803	1	STRAP F. TANK REINFOR.550 NAV
10595303	1	FLATBAR SIDE STRAP F.NAV550
10596003	1	STRAP F.NAV TANK 550GAL L=86.2
10608503	1	FRAME NAVIGATOR 550-98
10608603	1	HANDRAIL NAV. 550-98
10623603	1	CABLE & HOSE HOLDER NAV.
10631803	1	FLATBAR 1/4" x 110MM F.JACK
10631903	1	JACK MOUNT NAV550/1000 W/MOUNT
10632103	1	JACK F RANGER 5000LB
10640503	1	TIRE 12.4 X 24" 6 PLY R1
28045103	1	RIM 38X10 8/8/6 4.18-OS GRAY
28050103	1	HUB F 3" 758 7500# PACKAGE
63027703	1	AXLE RANGER 60-98

FRAME NAVIGATOR M STA 550
E0300-HIN, 01:01:16

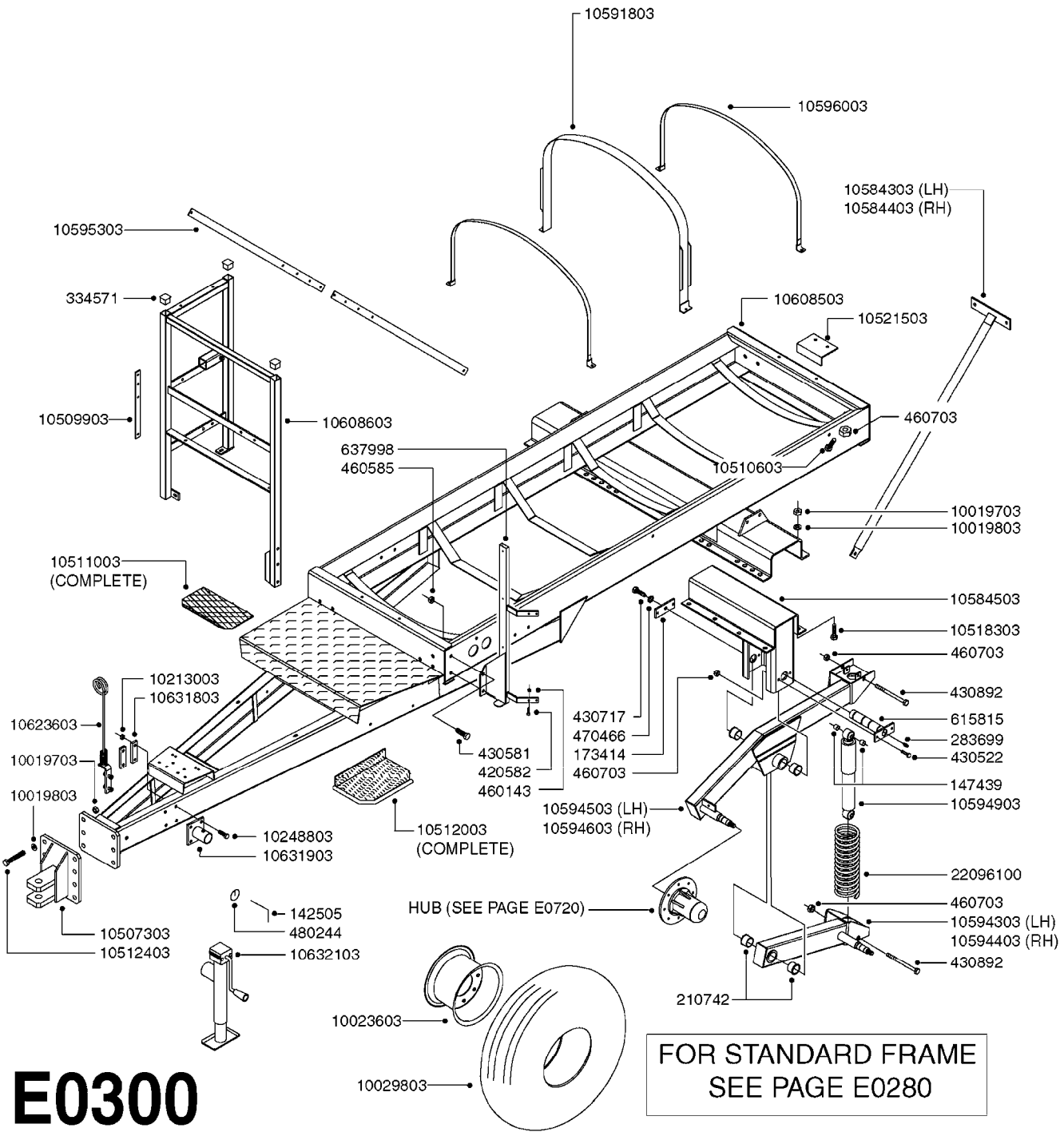

E0300

Agroparts: www.HARDI-INTERNATIONAL.com

FRAME NAVIGATOR M STA 550
E0300-HIN, 01:01:16

Date 12.08.2020 11:39

parts-n°	order qty	description
142505	1	LOCKING PAWL 12 X 70MM
147439	1	BUSHING 019, O/013 L=20
173414	1	FLATBAR 60x10 L=130/2x013-1x01
210742	1	BUSHING TA500
283699	1	GREASE NIPPLE M6X1
334571	1	PLUG 40x40x2 F.SQ.TUBE
420582	1	BOLT HEX 8.8 DEL M8X20 FT A2
430522	1	BOLT HEX 8.8 DEL M12X25 FT
430581	1	BOLT HEX 8.8 DEL M16X40 FT
430717	1	BOLT HEX 8.8 RAW M12x40
430892	1	BOLT HEX 8.8 DEL M12X110
460143	1	LOCK NUT M8 SST A2 DIN985
460585	1	LOCKING NUT M16 DIN985 A2 SS
460703	1	NUT HEX M12X1.75 LOCK DIN985A2 SS
470466	1	WASHER D21.1/D12.2X2.5 LOCK
480244	1	PIN SNAP D4.5
615815	1	BEARING BOLT 050 L=336
637998	1	MANIFOLD BKT. NAVIGATOR
10019703	1	NUT HEX NC FHN 3/4-10 Z 5
10019803	1	WASHER LOCK L/W Z 3/4"
10023603	1	RIM 15 X 8 X 6 BOLT
10029803	1	TIRE & TUBE 11L15 8 PLY
10213003	1	NUT HEX NC (NYLON LOCK) 7/16"
10248803	1	BOLT HEX 7/16 NC GR.2 02.00"
10507303	1	CLEVIS NAV.550/800/1000 GAL.
10509903	1	FLATBAR F.FILTER
10510603	1	BOLT F.ANCHOR STRAP
10511003	1	FRONT STEP ASSY.550/800/1000
10512003	1	SIDE STEP ASSY.550/800/1000
10512403	1	BOLT HEX 3/4 NC GR.8 02.25"
10518303	1	BOLT HEX 2&3/4 NC GR.8 3.00"
10521503	1	NAV TANK STOP BKT.KIT
10584303	1	SIDE BRACE 550 L.H.
10584403	1	SIDE BRACE 550 R.H.
10584503	1	AXLE INSERT S.T.A.
10591803	1	STRAP F. TANK REINFOR.550 NAV
10594303	1	STA LOWER BEAMW/M W.SPINDLE LH
10594403	1	STA LOWER BEAMW/M W/SPINDLE RH
10594503	1	STA TOP BEAM W/M W/SPINDLE LH
10594603	1	STA TOP BEAM W/M W/SPINDLE RH
10594903	1	SHOCK ABSORBER STA
10595303	1	FLATBAR SIDE STRAP F.NAV550
10596003	1	STRAP F.NAV TANK 550GAL L=86.2
10608503	1	FRAME NAVIGATOR 550-98
10608603	1	HANDRAIL NAV. 550-98
10623603	1	CABLE & HOSE HOLDER NAV.
10631803	1	FLATBAR 1/4" x 110MM F.JACK
10631903	1	JACK MOUNT NAV550/1000 W/MOUNT
10632103	1	JACK F RANGER 5000LB
22096100	1	SPRING D146/20 BLACK

TANK - RANGER 2200 (PRE '08)
E0310-HIN, 01:01:16

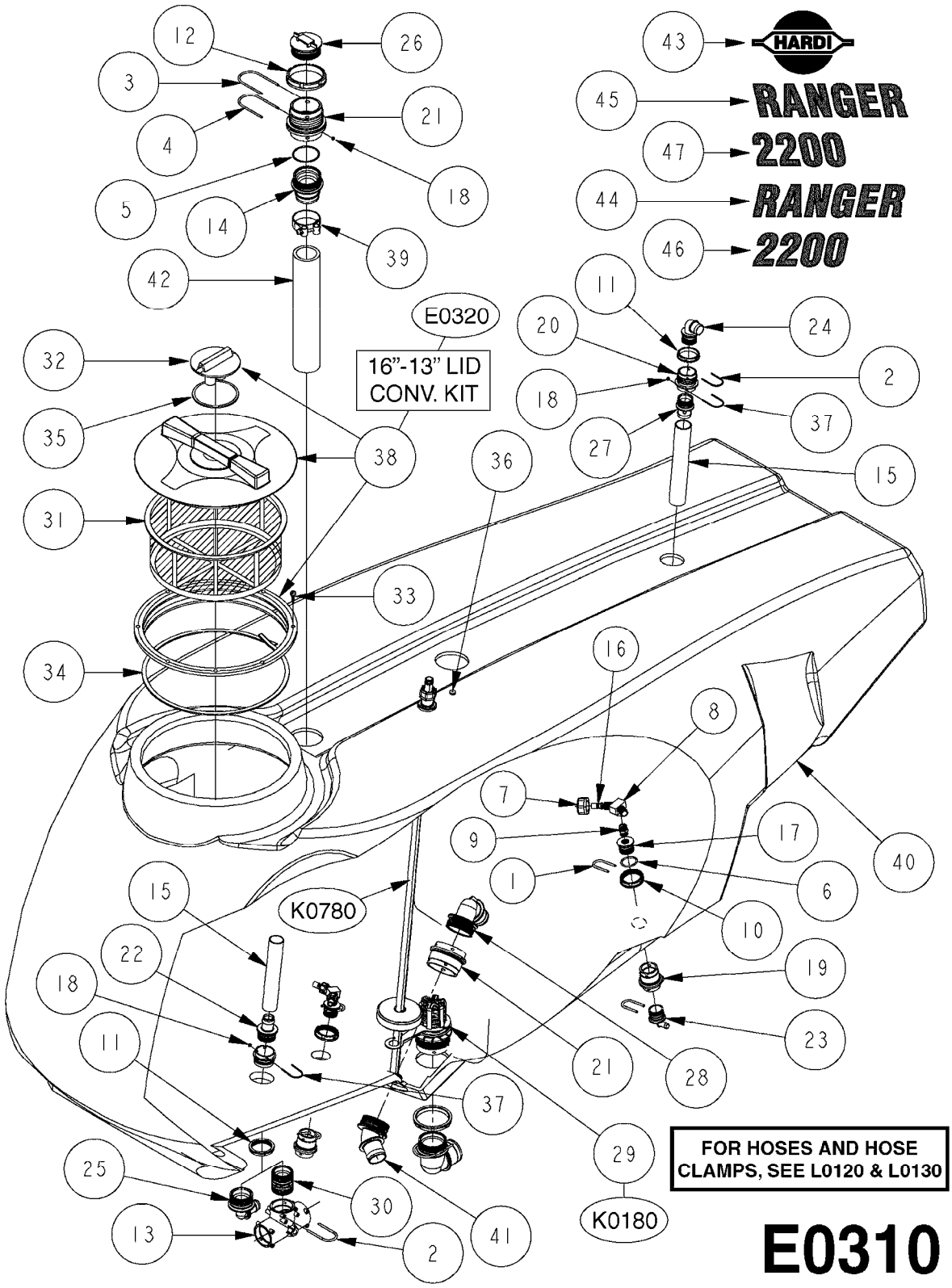

Agroparts: www.HARDI-INTERNATIONAL.com

TANK - RANGER 2200 (PRE '08)
E0310-HIN, 01:01:16

Date 12.08.2020 11:39

Pos.	parts-nº	order qty	description
1	145995	1	FITT.DK S-53 FORK
2	145996	1	FITT.DK S-67 FORK
3	145997	1	FITT.DK S-93 FORK
4	147774	1	FITT.DK S-93 FORK W. M5 THREAD
5	242351	1	O-RING D69.5X3.0 VITON F.S-93
6	242354	1	O-RING D32.2X3.0 VITON
7	320084	1	FITT.DK NUT 1/2" BSP
8	320563	1	FITT.DK 3 WAY 1/2" 110 DEG.
9	320655	1	FITT.DK HN 1/2"-1/2" BSP
10	322107	1	FITT.DK S-53 BULKHEAD NUT
11	322108	1	FITT.DK S-67 BULKHEAD NUT
12	322109	1	FITT.DK S-93 BULKHEAD NUT
13	322224	1	FITT.DK S-67 TEE
14	334235	1	FITT.DK S-93 STR.2-1/2"RUBBER
15	341149	1	RETURN TUBE Ø40 L=2000
16	370495	1	NOZZLE INJECTOR 5066-3.0
17	391100	1	FITT.DK S-53THREAD INS.1/2"BSP
18	461217	1	NUT HEX M5 LOCK
19	726463	1	FITT.DK S53 BULKHEAD W/GASKET
20	726464	1	FITT.DK S-67 BULKHEAD W/GASKET
21	726465	1	FITT.DK S-93 BULKHEAD W/GASKET
22	726561	1	FITT.DK S-67 STR.1-1/4" O-RING
23	726568	1	FITT.DK.S-53 HB 1/2"90 W/O-RING
24	726572	1	FITT.DK S-67 1" ELBOW 90 ASSY.
25	727224	1	FITT.DK S67X90,1.5HB SUCTION
26	726580	1	FITT. S93 PLUG W/O-RING
27	727223	1	FITT.S67 1.5" STRAIT S W/ORING
28	727225	1	FITT.DK S-93 ELB.2'PVC W/ORING
29	727742	1	TOP DRAIN CORD TYPE
30	728526	1	FITT.DK S-67 CONNECT W/O-RINGS
31	10045303	1	FILTER BASKET 16"
32	10052203	1	LID VENT ASSY
33	10054503	1	SCREW 3/4" SELF TAPPING
34	10064203	1	SET SEALING SPONGE 1 Ft BULK
35	10102203	1	GASKET F.16" LID BREATHER
36	14001500	1	GROMMET F.TOP DRAIN CORD
37	14012200	1	FITT.DK S-67 FORK W/M5 THREADS
38	28014203	1	LID ASSY. (3-PC.) 16" ARAG
39	28030303	1	CLAMP HOSE T-BOLT S2.5" 235-76
40	35003803	1	TANK, MAIN 2200L RANGER DK PIG RAW
41	72072700	1	FITT.DK S-93 45D 2" PVC
42	92702803	1	HOSE PVC SUCT GRAY 2.5"
43	97811600	1	DECAL COMPANY 335MM X 210MM
44	97817500	1	DECAL RANGER LEFT
45	97817600	1	DECAL RANGER RIGHT
46	97817700	1	DECAL 2200 LEFT
47	97817800	1	DECAL 2200 RIGHT

	Agroparts: www.HARDI-INTERNATIONAL.com	
HARDI	SEVERE TERRAIN LID CONV. KIT E0320-HIN, 01:01:16	Page 0 Date 12.08.2020 11:39

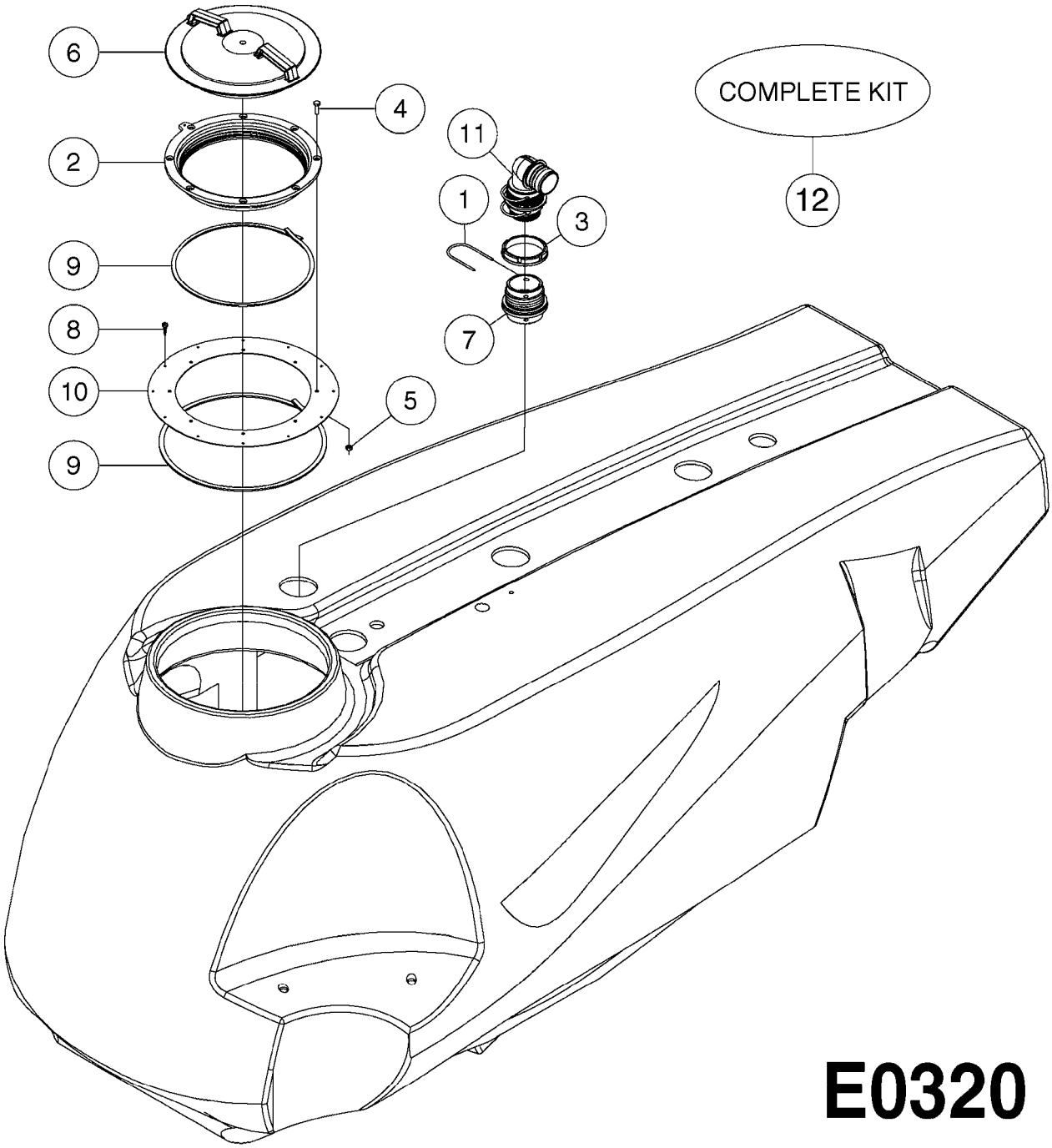

Agroparts: www.HARDI-INTERNATIONAL.com

SEVERE TERRAIN LID CONV. KIT
E0320-HIN, 01:01:16

Date 12.08.2020 11:39

Pos.	parts-nº	order qty	description
1	145997	1	FITT.DK S-93 FORK
2	322097	1	THREADED RING F. LID
3	322109	1	FITT.DK S-93 BULKHEAD NUT
4	410546	1	BOLT HEX M6X12 A2 SS DIN933
5	460261	1	NUT HEX M6X1.00 LOCK DIN985 A2 SS
6	726003	1	LID F. TANK
7	726465	1	FITT.DK S-93 BULKHEAD W/GASKET
8	10054503	1	SCREW 3/4" SELF TAPPING
9	10064203	1	SET SEALING SPONGE 1 Ft BULK
10	16134303	1	LID MOUNTING RING SS
11	72374800	1	TANK VENT S93 2-1/2" NAV/NCM
12	83351203	1	LID,SEVERE TERRAIN KIT 16"ADPT

TANK - RANGER 2200 (POST '08)
E0330-HIN, 01:01:16

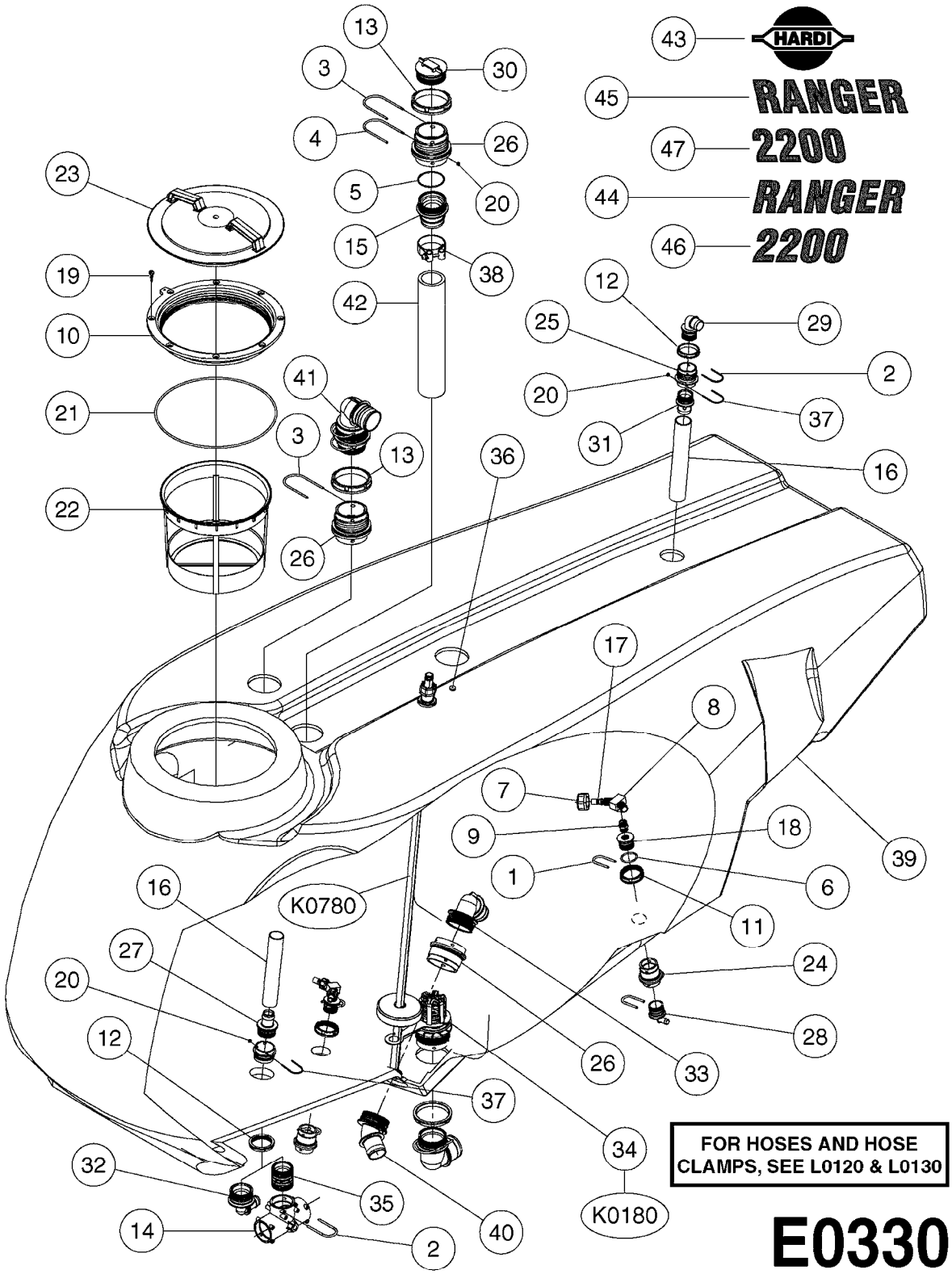

Agroparts: www.HARDI-INTERNATIONAL.com

TANK - RANGER 2200 (POST '08)
E0330-HIN, 01:01:16

Date 12.08.2020 11:39

Pos.	parts-nº	order qty	description
1	145995	1	FITT.DK S-53 FORK
2	145996	1	FITT.DK S-67 FORK
3	145997	1	FITT.DK S-93 FORK
4	147774	1	FITT.DK S-93 FORK W. M5 THREAD
5	242351	1	O-RING D69.5X3.0 VITON F.S-93
6	242354	1	O-RING D32.2X3.0 VITON
7	320084	1	FITT.DK NUT 1/2" BSP
8	320563	1	FITT.DK 3 WAY 1/2" 110 DEG.
9	320655	1	FITT.DK HN 1/2"-1/2" BSP
10	322097	1	THREADED RING F. LID
11	322107	1	FITT.DK S-53 BULKHEAD NUT
12	322108	1	FITT.DK S-67 BULKHEAD NUT
13	322109	1	FITT.DK S-93 BULKHEAD NUT
14	322224	1	FITT.DK S-67 TEE
15	334235	1	FITT.DK S-93 STR.2-1/2"RUBBER
16	341149	1	RETURN TUBE Ø40 L=2000
17	370495	1	NOZZLE INJECTOR 5066-3.0
18	391100	1	FITT.DK S-53THREAD INS.1/2"BSP
19	440392	1	SCREW 6.3 X 25.0 DIN7981C TORX
20	461217	1	NUT HEX M5 LOCK
21	614588	1	SEAL F. LID
22	614602	1	FILTER BASKET
23	726003	1	LID F. TANK
24	726463	1	FITT.DK S53 BULKHEAD W/GASKET
25	726464	1	FITT.DK S-67 BULKHEAD W/GASKET
26	726465	1	FITT.DK S-93 BULKHEAD W/GASKET
27	726561	1	FITT.DK S-67 STR.1-1/4" O-RING
28	726568	1	FITT.DK.S-53 HB 1/2"90 W/O-RING
29	726572	1	FITT.DK S-67 1" ELBOW 90 ASSY.
30	726580	1	FITT. S93 PLUG W/O-RING
31	727223	1	FITT.S67 1.5" STRAIT S W/ORING
32	727224	1	FITT.DK S67X90,1.5HB SUCTION
33	727225	1	FITT.DK S-93 ELB.2'PVC W/ORING
34	727742	1	TOP DRAIN CORD TYPE
35	728526	1	FITT.DK S-67 CONNECT W/O-RINGS
36	14001500	1	GROMMET F.TOP DRAIN CORD
37	14012200	1	FITT.DK S-67 FORK W/M5 THREADS
38	28030303	1	CLAMP HOSE T-BOLT S2.5" 235-76
39	35003803	1	TANK, MAIN 2200L RANGER DK PIG RAW
40	72072700	1	FITT.DK S-93 45D 2" PVC
41	72374800	1	TANK VENT S93 2-1/2" NAV/NCM
42	92702803	1	HOSE PVC SUCT GRAY 2.5"
43	97811600	1	DECAL COMPANY 335MM X 210MM
44	97817500	1	DECAL RANGER LEFT
45	97817600	1	DECAL RANGER RIGHT
46	97817700	1	DECAL 2200 LEFT
47	97817800	1	DECAL 2200 RIGHT

TANK - RANGER 550
E0340-HIN, 01:01:16

Date 12.08.2020 11:39

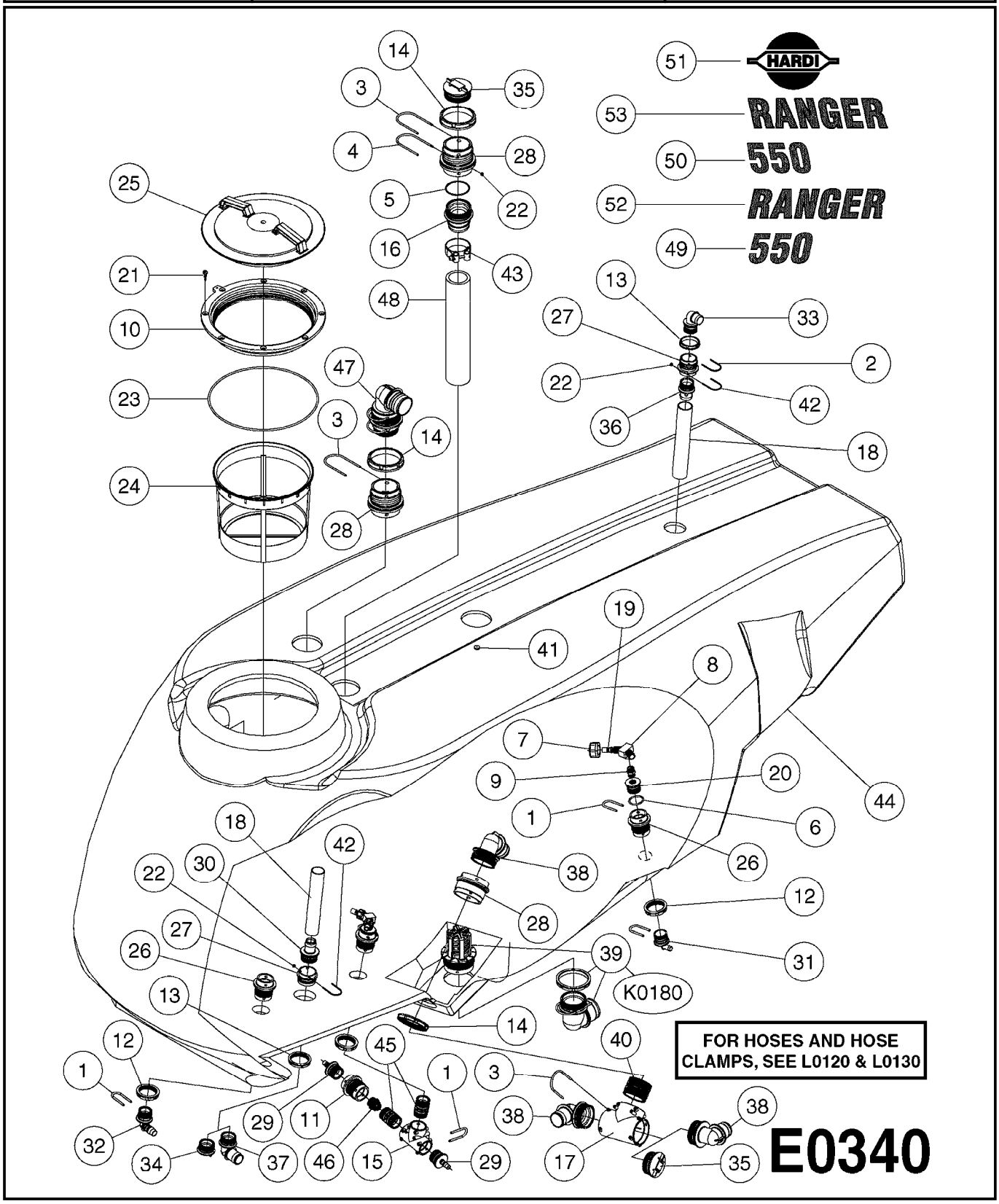

Agroparts: www.HARDI-INTERNATIONAL.com

TANK - RANGER 550
E0340-HIN, 01:01:16

Date 12.08.2020 11:39

Pos.	parts-nº	order qty	description
1	145995	1	FITT.DK S-53 FORK
2	145996	1	FITT.DK S-67 FORK
3	145997	1	FITT.DK S-93 FORK
4	147774	1	FITT.DK S-93 FORK W. M5 THREAD
5	242351	1	O-RING D69.5X3.0 VITON F.S-93
6	242354	1	O-RING D32.2X3.0 VITON
7	320084	1	FITT.DK NUT 1/2" BSP
8	320563	1	FITT.DK 3 WAY 1/2" 110 DEG.
9	320655	1	FITT.DK HN 1/2"-1/2" BSP
10	322097	1	THREADED RING F. LID
11	322103	1	FITT.DK S-53 BULKHEAD
12	322107	1	FITT.DK S-53 BULKHEAD NUT
13	322108	1	FITT.DK S-67 BULKHEAD NUT
14	322109	1	FITT.DK S-93 BULKHEAD NUT
15	322352	1	FITT.DK S-53 TEE
16	334235	1	FITT.DK S-93 STR.2-1/2"RUBBER
17	334545	1	FITT.DK S-93 TEE
18	341149	1	RETURN TUBE Ø40 L=2000
19	370495	1	NOZZLE INJECTOR 5066-3.0
20	391100	1	FITT.DK S-53THREAD INS.1/2"BSP
21	440392	1	SCREW 6.3 X 25.0 DIN7981C TORX
22	461217	1	NUT HEX M5 LOCK
23	614588	1	SEAL F. LID
24	614602	1	FILTER BASKET
25	726003	1	LID F. TANK
26	726463	1	FITT.DK S53 BULKHEAD W/GASKET
27	726464	1	FITT.DK S-67 BULKHEAD W/GASKET
28	726465	1	FITT.DK S-93 BULKHEAD W/GASKET
29	726556	1	FITT.DK S-53 HB 1/2" W/O-RING
30	726561	1	FITT.DK S-67 STR.1-1/4" O-RING
31	726568	1	FITT.DK.S-53 HB 1/2"90 W/O-RING
32	726570	1	FITT.DK S-53 ELB.3/4" W.ORING
33	726572	1	FITT.DK S-67 1" ELBOW 90 ASSY.
34	726579	1	FITT. S67 PLUG W/O-RING
35	726580	1	FITT. S93 PLUG W/O-RING
36	727223	1	FITT.S67 1.5" STRAIT S W/ORING
37	727224	1	FITT.DK S67X90,1.5HB SUCTION
38	727225	1	FITT.DK S-93 ELB.2'PVC W/ORING
39	727742	1	TOP DRAIN CORD TYPE
40	728525	1	FITT. S93 CONNECTOR W/O-RINGS
41	14001500	1	GROMMET F.TOP DRAIN CORD
42	14012200	1	FITT.DK S-67 FORK W/M5 THREADS
43	28030303	1	CLAMP HOSE T-BOLT S2.5" 235-76
44	35003803	1	TANK, MAIN 2200L RANGER DK PIG RAW
45	72114300	1	FITT. DK S-53 MALE MALE W.ORIN
46	72132600	1	CHECK VALVE SUBASSEMBLY S53
47	72374800	1	TANK VENT S93 2-1/2" NAV/NCM
48	92702803	1	HOSE PVC SUCT GRAY 2.5"
49	97612403	1	DECAL 550 LEFT
50	97612503	1	DECAL 550 RIGHT
51	97811600	1	DECAL COMPANY 335MM X 210MM
52	97817500	1	DECAL RANGER LEFT
53	97817600	1	DECAL RANGER RIGHT

TANK - RANGER 2000
E0350-HIN, 05:12:19

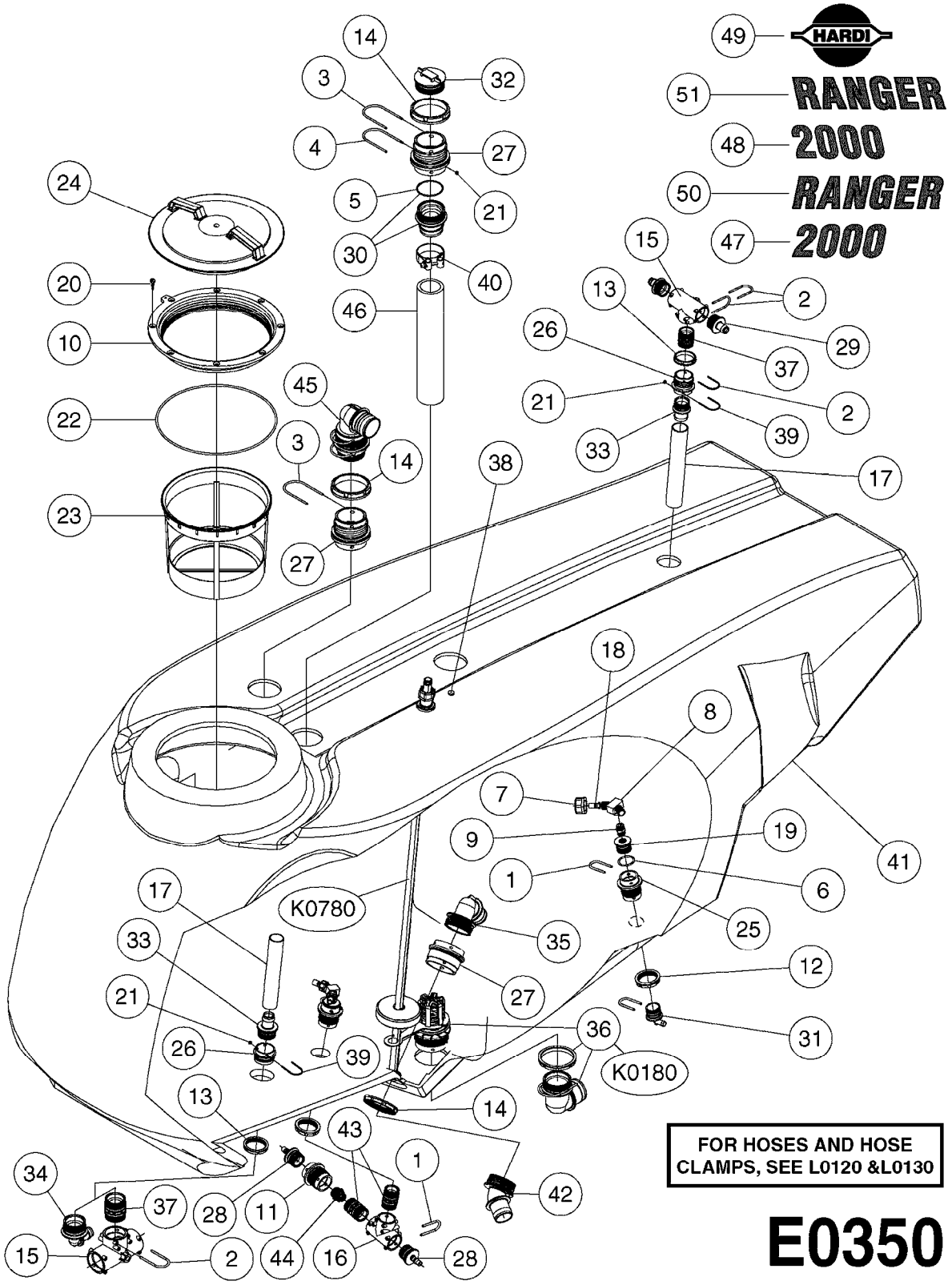

Agroparts: www.HARDI-INTERNATIONAL.com

TANK - RANGER 2000
E0350-HIN, 05:12:19

Date 12.08.2020 11:39

Pos.	parts-nº	order qty	description
1	145995	1	FITT.DK S-53 FORK
2	145996	1	FITT.DK S-67 FORK
3	145997	1	FITT.DK S-93 FORK
4	147774	1	FITT.DK S-93 FORK W. M5 THREAD
5	242351	1	O-RING D69.5X3.0 VITON F.S-93
6	242354	1	O-RING D32.2X3.0 VITON
7	320084	1	FITT.DK NUT 1/2" BSP
8	320563	1	FITT.DK 3 WAY 1/2" 110 DEG.
9	320655	1	FITT.DK HN 1/2"-1/2" BSP
10	322097	1	THREADED RING F. LID
11	322103	1	FITT.DK S-53 BULKHEAD
12	322107	1	FITT.DK S-53 BULKHEAD NUT
13	322108	1	FITT.DK S-67 BULKHEAD NUT
14	322109	1	FITT.DK S-93 BULKHEAD NUT
15	322224	1	FITT.DK S-67 TEE
16	322352	1	FITT.DK S-53 TEE
17	341149	1	RETURN TUBE Ø40 L=2000
			FRONT = 40.5"(1029mm), REAR = 17"(432mm)
18	370495	1	NOZZLE INJECTOR 5066-3.0
19	391100	1	FITT.DK S-53THREAD INS.1/2"BSP
20	440392	1	SCREW 6.3 X 25.0 DIN7981C TORX
21	461217	1	NUT HEX M5 LOCK
22	614588	1	SEAL F. LID
23	614602	1	FILTER BASKET
24	726003	1	LID F. TANK
25	726463	1	FITT.DK S53 BULKHEAD W/GASKET
26	726464	1	FITT.DK S-67 BULKHEAD W/GASKET
27	726465	1	FITT.DK S-93 BULKHEAD W/GASKET
28	726556	1	FITT.DK S-53 HB 1/2" W/O-RING
29	726560	1	FITT.DK S-67 STR.1" W.O'RING
30	726564	1	HOSE TAIL 2-1/2" W.O-RING
31	726568	1	FITT.DK.S-53 HB 1/2"90 W/O-RING
32	726580	1	FITT. S93 PLUG W/O-RING
33	727223	1	FITT.S67 1.5" STRAIT S W/ORING
34	727224	1	FITT.DK S67X90,1.5HB SUCTION
35	727225	1	FITT.DK S-93 ELB.2'PVC W/ORING
36	727742	1	TOP DRAIN CORD TYPE
37	728526	1	FITT.DK S-67 CONNECT W/O-RINGS
38	14001500	1	GROMMET F.TOP DRAIN CORD
39	14012200	1	FITT.DK S-67 FORK W/M5 THREADS
40	28030303	1	CLAMP HOSE T-BOLT S2.5" 235-76
41	35003803	1	TANK, MAIN 2200L RANGER DK PIG RAW
42	72072700	1	FITT.DK S-93 45D 2" PVC
43	72114300	1	FITT. DK S-53 MALE MALE W.ORIN
44	72132600	1	CHECK VALVE SUBASSEMBLY S53
45	72374800	1	TANK VENT S93 2-1/2" NAV/NCM
46	92702803	1	HOSE PVC SUCT GRAY 2.5"
47	97612203	1	DECAL 2000 LEFT
48	97612303	1	DECAL 2000 RIGHT
49	97617003	1	DECAL - HARDI 3D LOGO F.TANK 335 X 210
50	97817500	1	DECAL RANGER LEFT
51	97817600	1	DECAL RANGER RIGHT

FRAME - RANGER 2200
E0360-HIN, 01:01:16

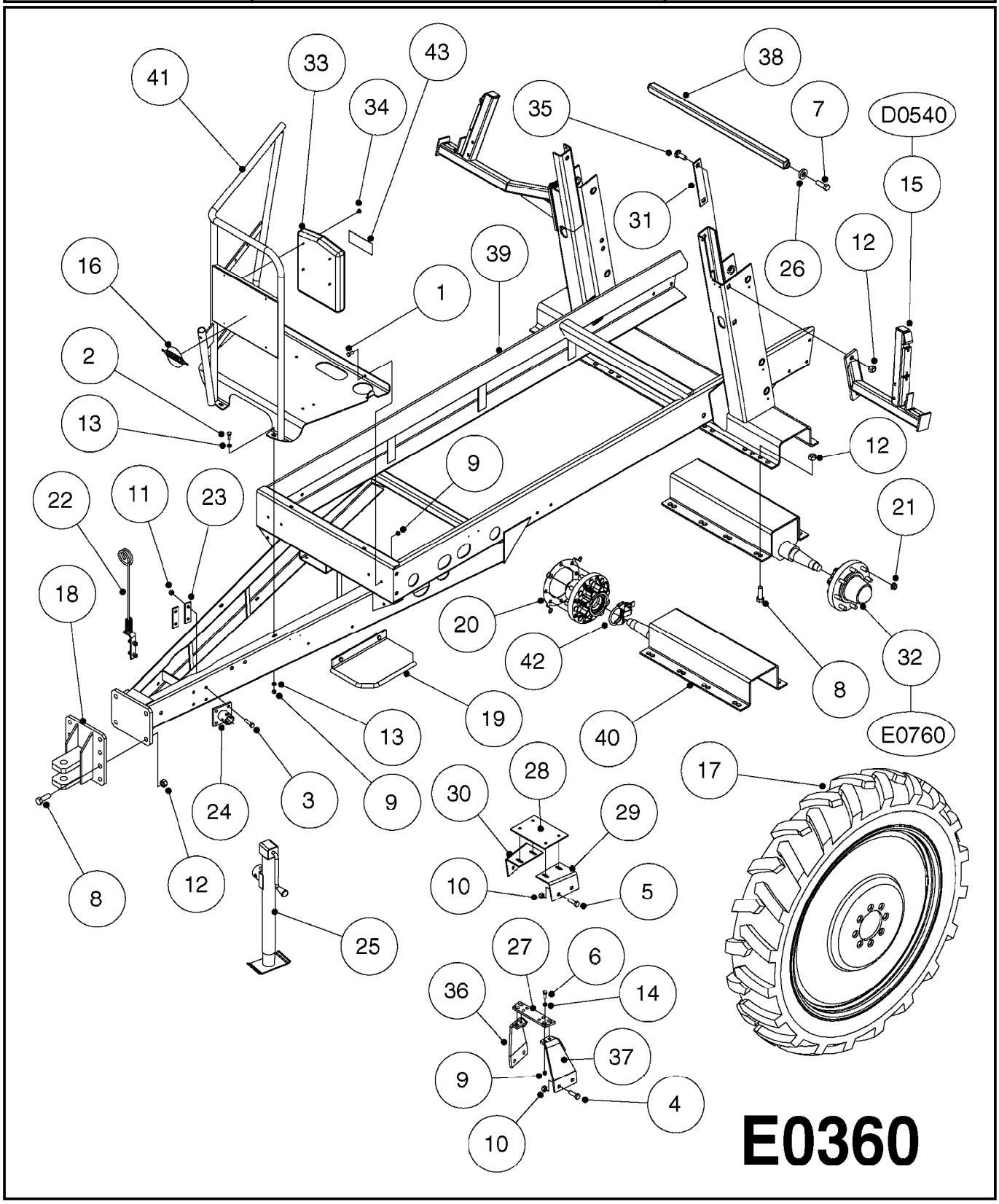

Agroparts: www.HARDI-INTERNATIONAL.com

FRAME - RANGER 2200
E0360-HIN, 01:01:16

Date 12.08.2020 11:39

Pos.	parts-nº	order qty	description
1	420604	1	BOLT HEX 8.8 DEL M10X25 FT DIN933
2	421002	1	BOLT HEX 8.8 DEL M10X30 FT DIN933
3	430404	1	BOLT HEX 8.8 DEL M12X50
4	430581	1	BOLT HEX 8.8 DEL M16X40 FT
5	430684	1	BOLT HEX 8.8 DEL M16X30 FT
6	430721	1	BOLT HEX 8.8 DEL M12X40 FT
7	430890	1	BOLT HEX 8.8 DEL M20X50
8	430977	1	BOLT HEX M20X60 DIN931-8.8.DEL
9	460423	1	NUT HEX M10X1.50 LOCK DIN985A2 SS
10	460585	1	LOCKING NUT M16 DIN985 A2 SS
11	460703	1	NUT HEX M12X1.75 LOCK DIN985A2 SS
12	460806	1	NUT HEX M20X2.50 LOCK DIN985A2 SS
13	471122	1	WASHER, M10, Ø20/10.5X 2.0, SS
14	471127	1	WASHER, M12, Ø24/13X24X2.5 SS
15	637958	1	TRANS.BKT CM EAGLE45'-66' RH
15	637959	1	TRANS.BKT CM EAGLE45'-66' LH
16	976157	1	DECAL COMPANY (4.4" X 4.6")
17	10462503	1	TIRE 11.2" X 38" 4 PLY TUBE L.
17	10583803	1	RIM 24X10X8"BC 4-1/8"NEG OFFS
17	10583903	1	TIRE ASSY 12.4X24X8"BC RH TL
17	10584003	1	TIRE ASSY 12.4X24X8"BC LH TL
17	10640503	1	TIRE 12.4 X 24" 6 PLY R1
17	28045103	1	RIM 38X10 8/8/6 4.18-OS GRAY
17	70030603	1	TIRE ASSY 11.2-38 RH
17	70030703	1	TIRE ASSY 11.2-38 LH
18	10507303	1	CLEVIS NAV.550/800/1000 GAL.
19	10512003	1	SIDE STEP ASSY.550/800/1000
20	10587803	1	MAG MNT F. SPEED SNS 8 BOLT
21	10606703	1	NUT HEX NF 5/8" FLANGED F.STUD
22	10623603	1	CABLE & HOSE HOLDER NAV.
23	10631803	1	FLATBAR 1/4" x 110MM F.JACK
24	10631903	1	JACK MOUNT NAV550/1000 W/MOUNT
25	10632103	1	JACK F RANGER 5000LB
26	15006503	1	WASHER FRAME BUSHING
27	16054903	1	PUMP MT. PLATE ACE B.D.
28	16055603	1	PUMP MT. PLATE DIA. NAV. M
29	16055703	1	PUMP MT. PLATE L.H. DIA. NAV.M
30	16055803	1	PUMP MT. PLATE R.H. DIA. NAV.M
31	17012703	1	BAR, CRG BOLT RANGER FRAME
32	28050103	1	HUB F 3" 758 7500# PACKAGE
33	29003003	1	MANUAL HOLDER, FLAT
34	29003103	1	PLASTIC PUSH RIVET, 1/4" HOLE
35	43000203	1	BOLT HEX 8.8 CARRIAGE M20x2.5
36	61004603	1	PUMP MT. TOWER R.H. ACE B.D.
37	61004703	1	PUMP MT. TOWER L.H. ACE B.D.
38	61011603	1	CROSS BAR RANGER FRAME
39	63027303	1	FRAME, RANGER 550/2000/2200
40	63027703	1	AXLE RANGER 60-98
41	63037003	1	HANDRAIL PLATFORM, RANGER 2000
42	83306303	1	SPEED SNS MNT KIT CM750(02)
43	97607503	1	DECAL-OPERATOR'S MANUAL (LRG.)

PARALIFT - RANGER
E0370-HIN, 29:08:19

Date 12.08.2020 11:39

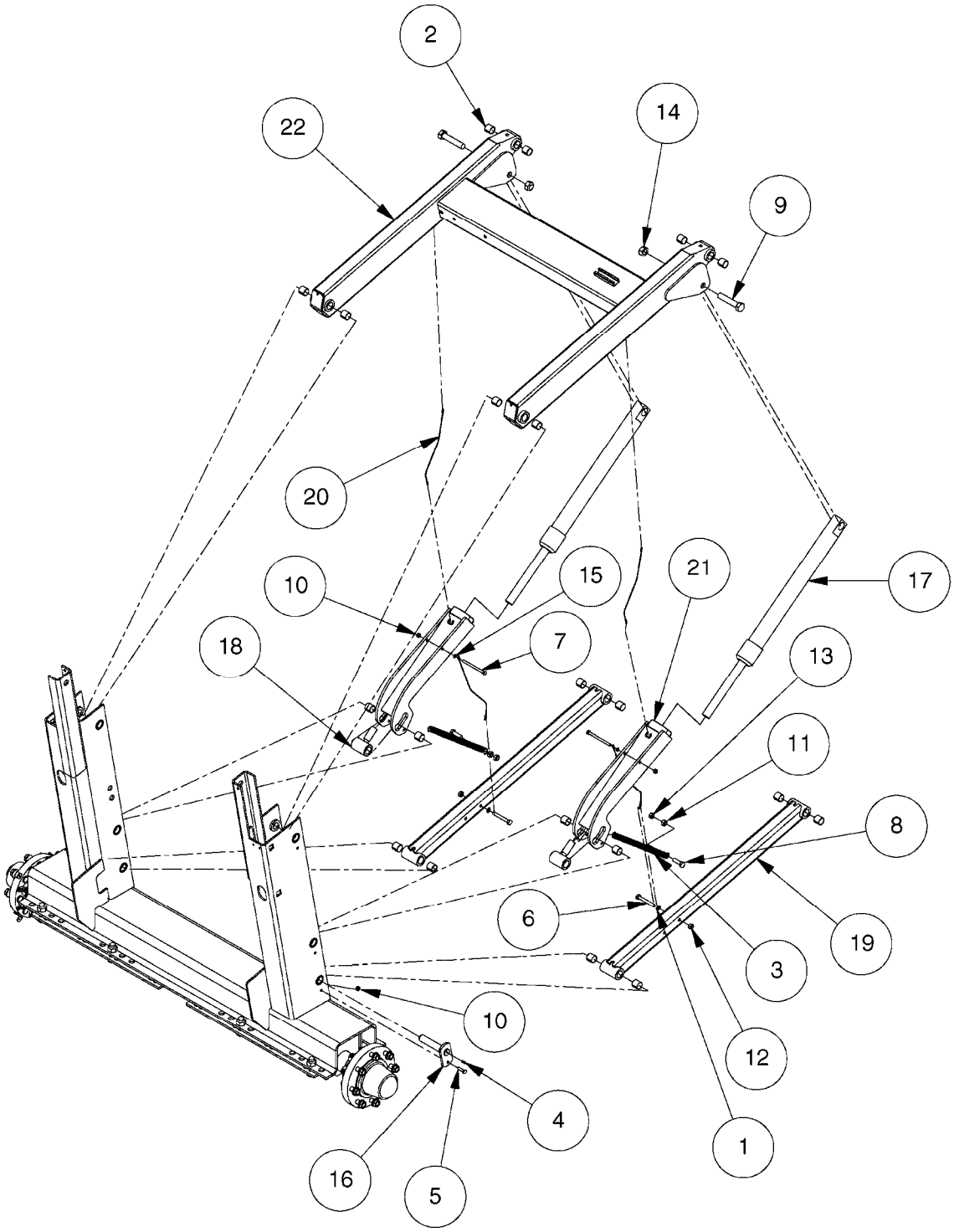

E0370

Agroparts: www.HARDI-INTERNATIONAL.com

PARALIFT - RANGER
E0370-HIN, 29:08:19

Date 12.08.2020 11:39

Pos.	parts-n°	order qty	description
1	163737	1	WASHER D15.5/D10.5X1
2	210835	1	BUSHING D28/25 L=25
3	220949	1	SPRING Ø20.0/3.0 L=240 BLACK
4	283699	1	GREASE NIPPLE M6X1
4	283772	1	GREASE NIPPLE M6X1 90°
5	420567	1	BOLT HEX 8.8 DEL M8X30 FT
6	420884	1	BOLT HEX 8.8 DEL M10X80 FT
7	421232	1	BOLT HEX 8.8 DEL M8X110
8	430721	1	BOLT HEX 8.8 DEL M12X40 FT
9	430918	1	M20X100 DIN 931-8.8 DEL
10	460143	1	LOCK NUT M8 SST A2 DIN985
11	460386	1	NUT HEX M12X1.75
12	460423	1	NUT HEX M10X1.50 LOCK DIN985A2 SS
13	460703	1	NUT HEX M12X1.75 LOCK DIN985A2 SS
14	460806	1	NUT HEX M20X2.50 LOCK DIN985A2 SS
15	471126	1	WASHER, M8, Ø16/ 8.4X 1.6, SS
16	615654	1	PIN D25 X 123 F. PARALIFT
17	781107	1	DOBCYL50/30-500/M24X2 78121200
			NLA - ORDER 78128800 AND 63029803
17	78121200	1	CYLINDER, D50/30-500
			NLA - REPLACED BY 78128800
17	78128800	1	CYLINDER, D50/30-500
			ONLY USE WITH 63029803 LOCKING ARM
18	61011803	1	ROD END M24X2 25M 06'07'
19	61011903	1	PARALIFT LINK ARM
20	61012003	1	WIRE Ø2 L"=457 +/-2MM
21	63027903	1	LOCKING ARM, PAIRLIFT RANGER
			ONLY USE WITH OBSOLETE CYLINDER 781107
21	63029803	1	LOCKING ARM, PARALIFT RG 2008
			ONLY USE WITH CYLINDER 78121200 OR 78128800
22	63028003	1	PARALIFT ARM

FRAME - RANGER 550
E0380-HIN, 07:01:20

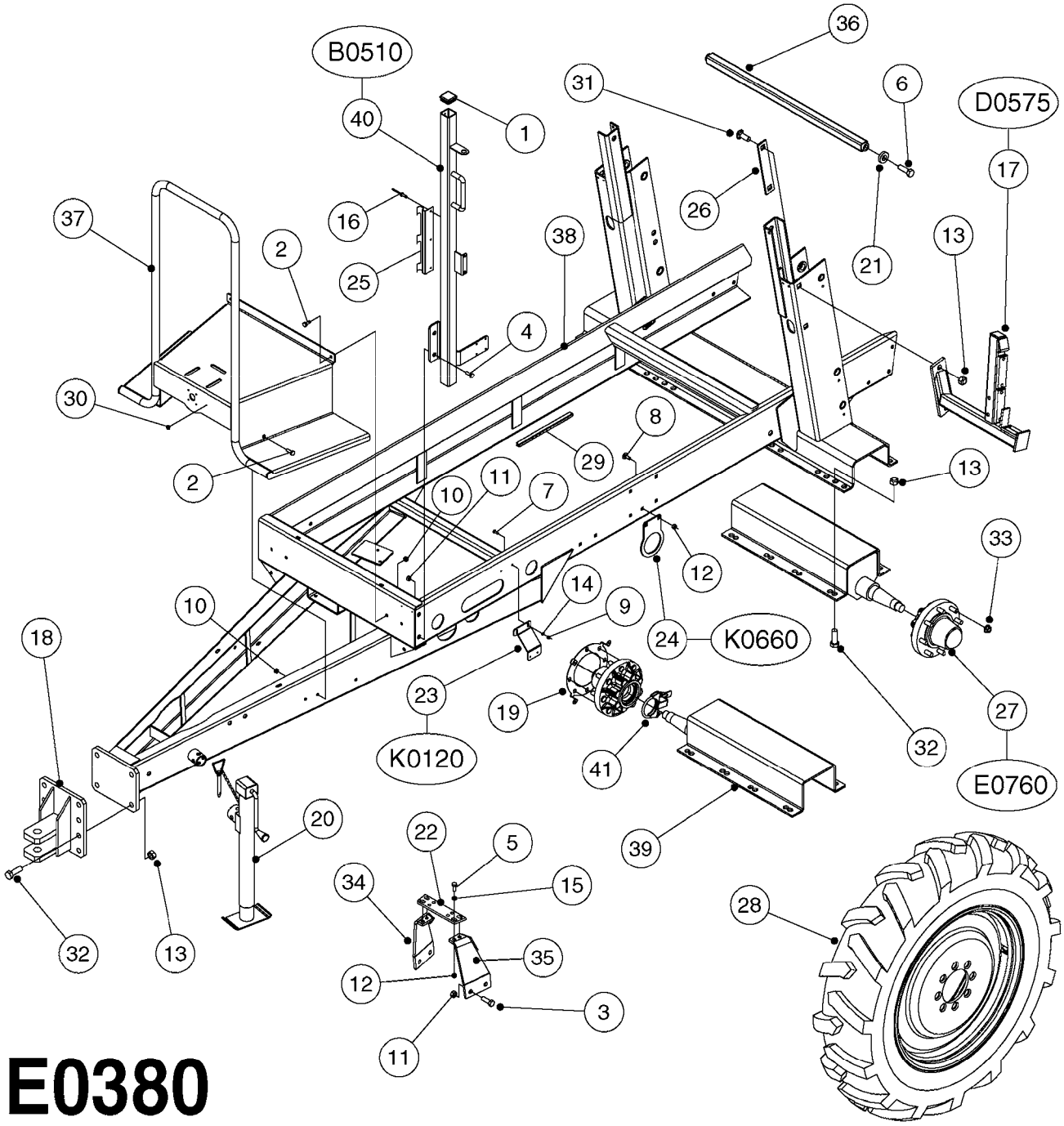

E0380

Agroparts: www.HARDI-INTERNATIONAL.com

FRAME - RANGER 550
E0380-HIN, 07:01:20

Date 12.08.2020 11:39

Pos.	parts-nº	order qty	description
1	334561	1	PLUG 50x50x2 F.SQ.TUBE
2	421002	1	BOLT HEX 8.8 DEL M10X30 FT DIN933
3	430581	1	BOLT HEX 8.8 DEL M16X40 FT
4	430684	1	BOLT HEX 8.8 DEL M16X30 FT
5	430721	1	BOLT HEX 8.8 DEL M12X40 FT
6	430890	1	BOLT HEX 8.8 DEL M20X50
7	451007	1	SCREW M6X20 STAINLESS
8	451070	1	CARRIAGE BOLT M12X30
9	460261	1	NUT HEX M6X1.00 LOCK DIN985 A2 SS
10	460423	1	NUT HEX M10X1.50 LOCK DIN985A2 SS
11	460585	1	LOCKING NUT M16 DIN985 A2 SS
12	460703	1	NUT HEX M12X1.75 LOCK DIN985A2 SS
13	460806	1	NUT HEX M20X2.50 LOCK DIN985A2 SS
14	471125	1	WASHER M6U 6.4X14X1.2,A2 SS
15	471127	1	WASHER, M12, Ø24/13X24X2.5 SS
16	480804	1	RIVET Ø4.8x14.5
17	637958	1	TRANS.BKT CM EAGLE45'-66' RH
17	637959	1	TRANS.BKT CM EAGLE45'-66' LH
18	10507303	1	CLEVIS NAV.550/800/1000 GAL.
19	10587803	1	MAG MNT F. SPEED SNS 8 BOLT
20	10632103	1	JACK F RANGER 5000LB
21	15006503	1	WASHER FRAME BUSHING
22	16054903	1	PUMP MT. PLATE ACE B.D.
23	16143803	1	BRACKET, FILLER TEE, RG550
24	16144003	1	BRACKET, QUICK FILL, RG550
25	16226200	1	BRACKET F.TANK SCALE - PAINTED
26	17012703	1	BAR, CRG BOLT RANGER FRAME
27	28050103	1	HUB F 3" 758 7500# PACKAGE
28	28058703	1	TIRE, 12.4x28, 6-PLY
28	28058803	1	RIM, 28X10, 8-8-6, 4.12" OS
28	70085303	1	TIRE ASSY 12.4-28 RH
28	70085403	1	TIRE ASSY 12.4-28 LH
29	28060003	1	EDGE TRIM,VINYL,SELF GRIP 1/4"
			PURCHASE UNIT 1 FOOT (12 INCHES)
30	28087800	1	BUTTON, VALVE FUNCTION 4Ø
31	43000203	1	BOLT HEX 8.8 CARRIAGE M20x2.5
32	43000803	1	BOLT HEX M20 X 70MM DEL - FT
33	46000703	1	NUT TAPERED LUG 5/8-18
34	61004603	1	PUMP MT. TOWER R.H. ACE B.D.
35	61004703	1	PUMP MT. TOWER L.H. ACE B.D.
36	61011603	1	CROSS BAR RANGER FRAME
37	61015903	1	PLATFORM, RANGER 550
38	63027303	1	FRAME, RANGER 550/2000/2200
39	63027703	1	AXLE RANGER 60-98
40	63035203	1	CONTROL POST, RANGER 550
41	83306303	1	SPEED SNS MNT KIT CM750(02)

FRAME - RANGER 2000
E0390-HIN, 07:01:20

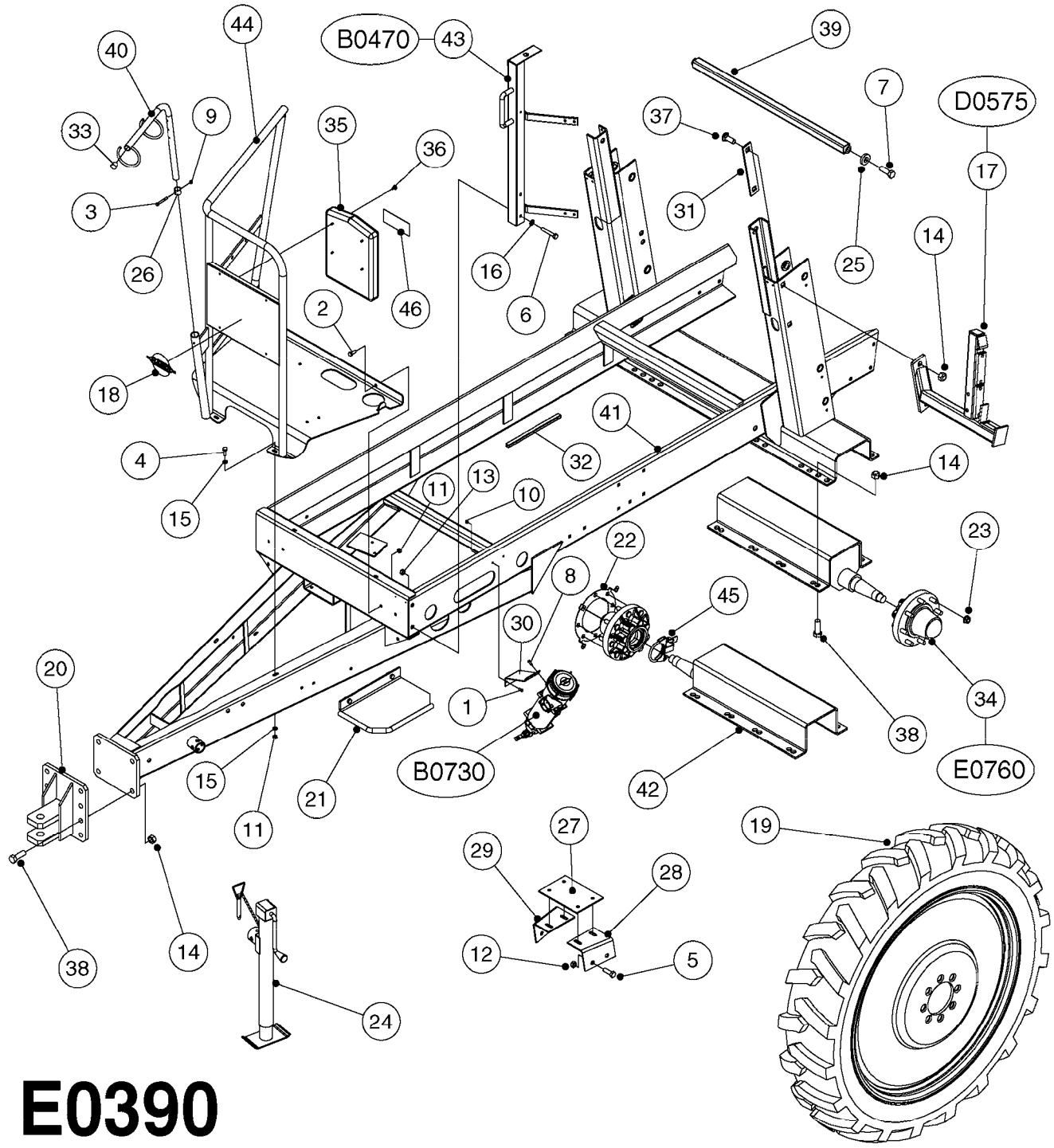

E0390

Agroparts: www.HARDI-INTERNATIONAL.com

FRAME - RANGER 2000
E0390-HIN, 07:01:20

Date 12.08.2020 11:39

Pos.	parts-nº	order qty	description
1	410185	1	BOLT HEX 8.8 DEL M6X16
2	420604	1	BOLT HEX 8.8 DEL M10X25 FT DIN933
3	420744	1	BOLT HEX 8.8 DEL M8X40
4	421002	1	BOLT HEX 8.8 DEL M10X30 FT DIN933
5	430684	1	BOLT HEX 8.8 DEL M16X30 FT
6	430802	1	BOLT HEX 8.8 DEL M12X75
7	430890	1	BOLT HEX 8.8 DEL M20X50
8	440698	1	SCREW F.PLASTIC 6X18 SS HEXHD
9	460143	1	LOCK NUT M8 SST A2 DIN985
10	460261	1	NUT HEX M6X1.00 LOCK DIN985 A2 SS
11	460423	1	NUT HEX M10X1.50 LOCK DIN985A2 SS
12	460585	1	LOCKING NUT M16 DIN985 A2 SS
13	460703	1	NUT HEX M12X1.75 LOCK DIN985A2 SS
14	460806	1	NUT HEX M20X2.50 LOCK DIN985A2 SS
15	471122	1	WASHER, M10, Ø20/10.5X 2.0, SS
16	471127	1	WASHER, M12, Ø24/13X24X2.5 SS
17	637958	1	TRANS.BKT CM EAGLE45'-66' RH
17	637959	1	TRANS.BKT CM EAGLE45'-66' LH
18	976157	1	DECAL COMPANY (4.4" X 4.6")
19	10462503	1	TIRE 11.2" X 38" 4 PLY TUBE L.
19	28045103	1	RIM 38X10 8/8/6 4.18-OS GRAY
19	70030603	1	TIRE ASSY 11.2-38 RH
19	70030703	1	TIRE ASSY 11.2-38 LH
20	10507303	1	CLEVIS NAV.550/800/1000 GAL.
21	10512003	1	SIDE STEP ASSY.550/800/1000
22	10587803	1	MAG MNT F. SPEED SNS 8 BOLT
23	10606703	1	NUT HEX NF 5/8" FLANGED F.STUD
24	10632103	1	JACK F RANGER 5000LB
25	15006503	1	WASHER FRAME BUSHING
26	15116700	1	BUSHING NAVIGATOR HOSE HOLDER
27	16055603	1	PUMP MT. PLATE DIA. NAV. M
28	16055703	1	PUMP MT. PLATE L.H. DIA. NAV.M
29	16055803	1	PUMP MT. PLATE R.H. DIA. NAV.M
30	16105703	1	PLATE SUPPORT SCF CYCLONE
31	17012703	1	BAR, CRG BOLT RANGER FRAME
32	28060003	1	EDGE TRIM,VINYL,SELF GRIP 1/4" PURCHASE UNIT 1 FOOT (12 INCHES)
33	28046400	1	PIPE PLUG Ø25/1.0-2.0, BLACK
34	28050103	1	HUB F 3" 758 7500# PACKAGE
35	29003003	1	MANUAL HOLDER, FLAT
36	29003103	1	PLASTIC PUSH RIVET, 1/4" HOLE
37	43000203	1	BOLT HEX 8.8 CARRIAGE M20x2.5
38	43000803	1	BOLT HEX M20 X 70MM DEL - FT
39	61011603	1	CROSS BAR RANGER FRAME
40	61053400	1	HOSE HOLDER UPPER NAVIGATOR
41	63027303	1	FRAME, RANGER 550/2000/2200
42	63027703	1	AXLE RANGER 60-98
43	63028103	1	MANIFOLD STAND RANGER
44	63037003	1	HANDRAIL PLATFORM, RANGER 2000
45	83306303	1	SPEED SNS MNT KIT CM750(02)
46	97607503	1	DECAL-OPERATOR'S MANUAL (LRG.)

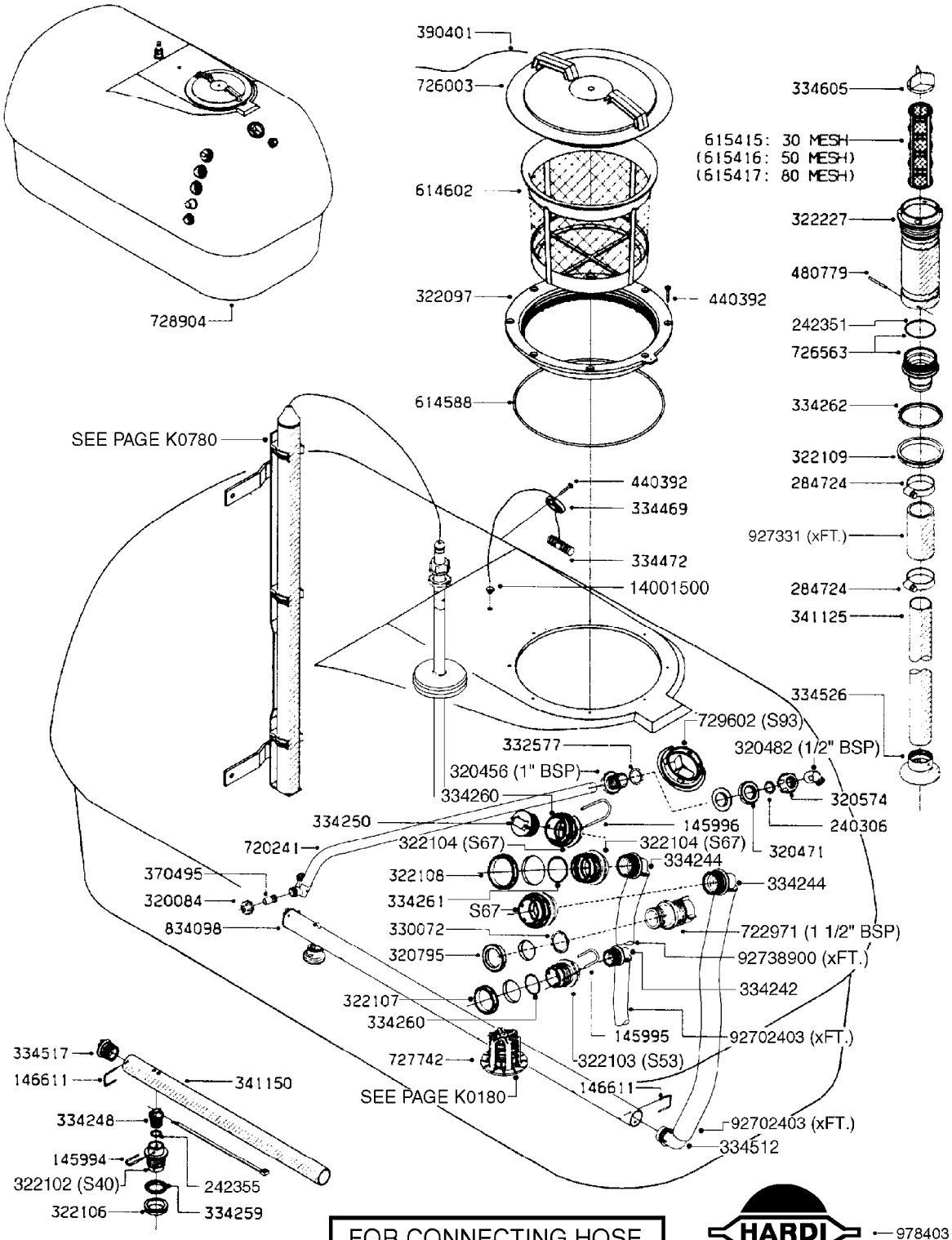

E0400

FOR CONNECTING HOSE FITTINGS, SEE SECTION L

Agroparts: www.HARDI-INTERNATIONAL.com

TANK HC650M 650 TWIN (POST 95)
E0400-HIN, 01:01:16

Date 12.08.2020 11:39

parts-n°	order qty	description
145994	1	FITT.DK S-40 FORK
145995	1	FITT.DK S-53 FORK
145996	1	FITT.DK S-67 FORK
146611	1	CLAMP D3/32-37MM
240306	1	O-RING D29/D21X4
242351	1	O-RING D69.5X3.0 VITON F.S-93
242355	1	O-RING D19.2X3.0 VITON F.S-40
284724	1	CLAMP HOSE GEAR D52-70
320084	1	FITT.DK NUT 1/2" BSP
320456	1	FITT.DK BULKHEAD 1"BSP DOUBLE
320471	1	FITT.DK NUT 1" BSP JAMB
320482	1	FITT.DK ELB. 1/2" BSP 60 DEG.
320574	1	FITT.DK NUT 1" BSP SPECIAL
320795	1	FITT.DK NUT 1-1/2" BSP JAMB
322097	1	THREADED RING F. LID
322102	1	FITT.DK S-40 BULKHEAD
322103	1	FITT.DK S-53 BULKHEAD
322104	1	FITT.DK S-67 BULKHEAD
322106	1	FITT.DK S-40 BULKHEAD NUT
322107	1	FITT.DK S-53 BULKHEAD NUT
322108	1	FITT.DK S-67 BULKHEAD NUT
322109	1	FITT.DK S-93 BULKHEAD NUT
322227	1	HOUSING F.FILTER S-93 2"
330072	1	O-RING D53.5/D45.5X4
332577	1	O-RING D38/D30X4 F.1" PUR.
334242	1	FITT.DK S-53 ELB.1"
334244	1	FITT.DK S-67 ELB.1-1/4"
334248	1	FITT.DK S-40 PLUG
334250	1	FITT.DK S-67 PLUG
334259	1	GASKET F. S-40 BULKHEAD
334260	1	GASKET F. S-53 BULKHEAD
334261	1	GASKET F. S-67 BULKHEAD
334262	1	GASKET F.S-93 BULKHEAD
334469	1	CLEVIS F.CORD TOP DRAIN ASSY.
334472	1	HANDLE FOR TOP DRAIN
334512	1	FITT.DK SPEC.ELB.1-1/4"110DEG
334517	1	END CAP F. SPARGER TUBE
334526	1	FOOT F.SUCTION TUBE 2"
334605	1	VANE F.TOP SUCTION FILTER
341125	1	341125
341150	1	SPARGE TUBE HC650
370495	1	NOZZLE INJECTOR 5066-3.0
390401	1	CORD NYLON F.LID 900MM
440392	1	SCREW 6.3 X 25.0 DIN7981C TORX
480779	1	PIN D5X55 SPLIT
614588	1	SEAL F. LID
614602	1	FILTER BASKET
615415	1	FILTER ELEM.S93,30 MESH-GREEN
615416	1	FILTER ELEM.S93,50 MESH-BLUE
615417	1	FILTER ELEM.S93,80 MESH-RED
720241	1	AGITATION TUBE CPL HC/TA 650M
722971	1	SAFETY VALVE SCF 217PSI(15BAR)
726003	1	LID F. TANK
726563	1	FITT.DK S-93 STR 2" W/O-RING
727742	1	TOP DRAIN CORD TYPE
728904	1	TANK/FRAME TY/TZ/TA 2400
729602	1	TOP SUCTION KIT NAV 2"
834098	1	SPARGE TUBE ASSY CPL HC/TA650M
927331	1	HOSE R X 28 BAR X 50MM X 0012"
978403	1	DECAL COMPANY 280 X 450
14001500	1	GROMMET F.TOP DRAIN CORD

parts-n°	order qty	description
92702403	1	HOSE PVC SUCT GRAY 1"
92738900	1	HOSE R X PVC X 1-1/4" 0012"

FRAME HC 650M/TWIN 650 POST 94
E0410-HIN, 01:01:16

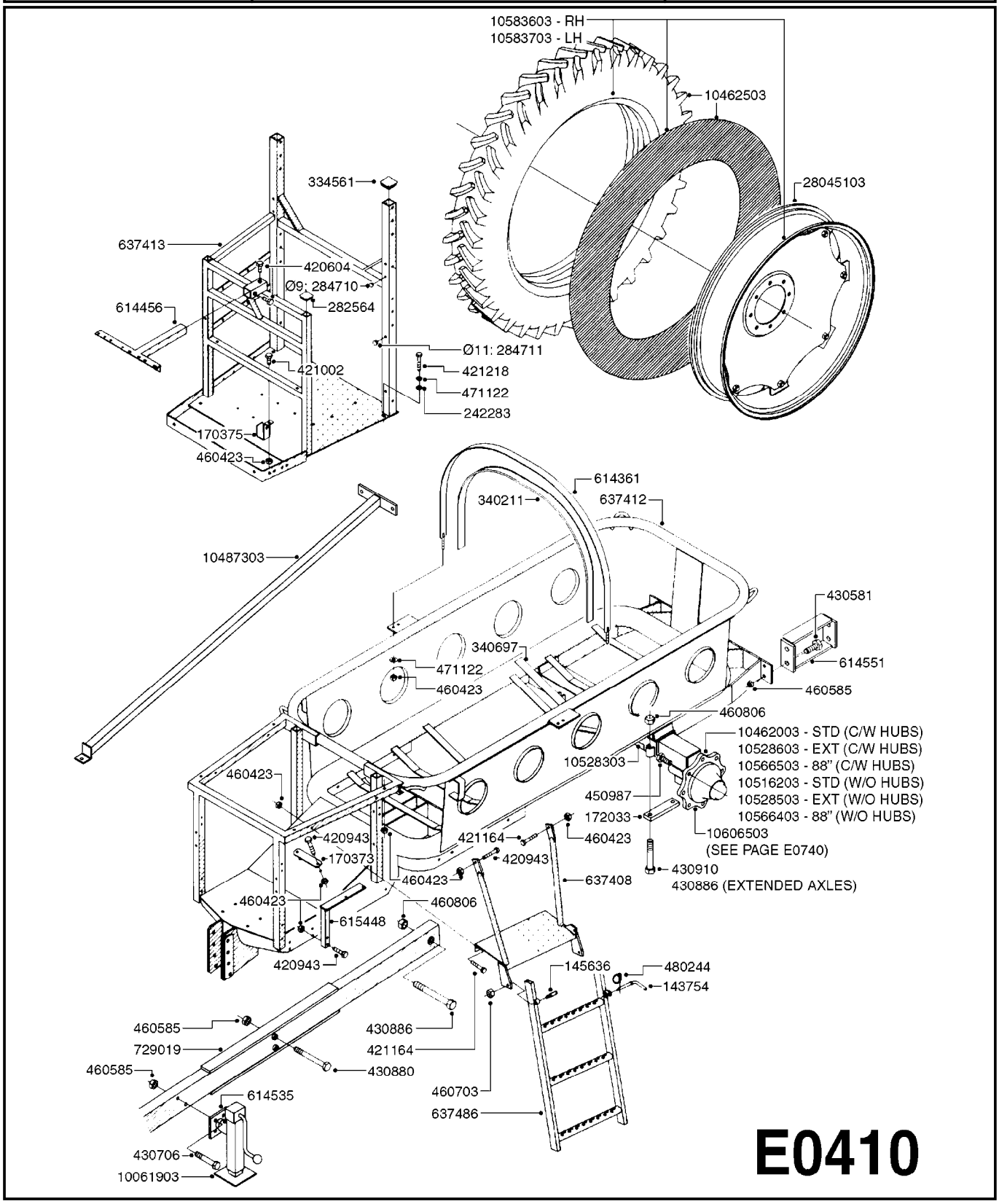

E0410

Agroparts: www.HARDI-INTERNATIONAL.com

FRAME HC 650M/TWIN 650 POST 94
E0410-HIN, 01:01:16

Date 12.08.2020 11:39

parts-n°	order qty	description
143754	1	PIN D10 X 56
145636	1	PIN F.HINGE M12
170373	1	FLATBAR
170375	1	BRACKET F.HOSE
172033	1	FLATBAR F.AXLE HC650M
242283	1	SEAL RUBBER
282564	1	PLUG 35MM SQ.BLACK
284710	1	PLUG F.DRILLED HOLE D9MM
284711	1	PLUG F.DRILLED HOLE D11MM
334561	1	PLUG 50x50x2 F.SQ.TUBE
340211	1	TANK STRAP PACKING 40X1800
340697	1	TANK PACKING 40X700
420604	1	BOLT HEX 8.8 DEL M10X25 FT DIN933
420943	1	BOLT HEX 8.8 DEL M10X50
421002	1	BOLT HEX 8.8 DEL M10X30 FT DIN933
421164	1	BOLT HEX 8.8 DEL M10X70
421218	1	BOLT HEX 8.8 DEL M10X90
430581	1	BOLT HEX 8.8 DEL M16X40 FT
430706	1	BOLT HEX 8.8 ZINC CLEAR M16X90
430880	1	BOLT HEX 8.8 DEL M16X140
430886	1	BOLT HEX 8.8 DEL M20X160
430910	1	BOLT HEX 8.8 DEL M20X110
450987	1	HUB BOLT M20 X 1.5 X 60 NAGBOL
460423	1	NUT HEX M10X1.50 LOCK DIN985A2 SS
460585	1	LOCKING NUT M16 DIN985 A2 SS
460703	1	NUT HEX M12X1.75 LOCK DIN985A2 SS
460806	1	NUT HEX M20X2.50 LOCK DIN985A2 SS
471122	1	WASHER, M10, Ø20/10.5X 2.0, SS
480244	1	PIN SNAP D4.5
614361	1	TANK STRAP HC650 L=92.5"
614456	1	BRACKET F.EC 3&4 BANK VALVES
614535	1	JACK MOUNTING WELDMENT HC950
614551	1	SPACER BLOCK HC 650 EAGLE
615448	1	BRACKET SUCTION MANIFOLD HC650
637408	1	PLATFORM EXTENTION HC650/950
637412	1	TANK FRAME BARE HC650M
637413	1	PLATFORM ASSY.HC650M/HC950M
637486	1	LADDER F. HC650M
729019	1	TONGUE HC650M/94
10061903	1	JACK F300/500/575 5000LB
10462003	1	AXLE INSERT.ASSY.HC500/650
10462503	1	TIRE 11.2" X 38" 4 PLY TUBE L.
10487303	1	SIDE BRACE W/M HC950 EAGLE
10516203	1	INSERT W/M 500/650HC W/SPINDLE
10528303	1	AXLE REINFORCE W/M 80" HC650M
10528503	1	INSERT W/M HC650M W/SPIND.LONG
10528603	1	AXLE INSERT ASSY.HC650M LONG
10566403	1	INSERT W/M HC650 88" W/SPINDLE
10566503	1	AXLE INSERT ASSY.HC650 88"
10583603	1	TIRE ASSY 11.2X38 RH 8"BC
10583703	1	TIRE ASSY 11.2X38 LH 8"BC
10606503	1	HUB ASSY.NAV550/800/1000 HC
28045103	1	RIM 38X10 8/8/6 4.18-OS GRAY

TANK - CM750
E0420-HIN, 01:01:16

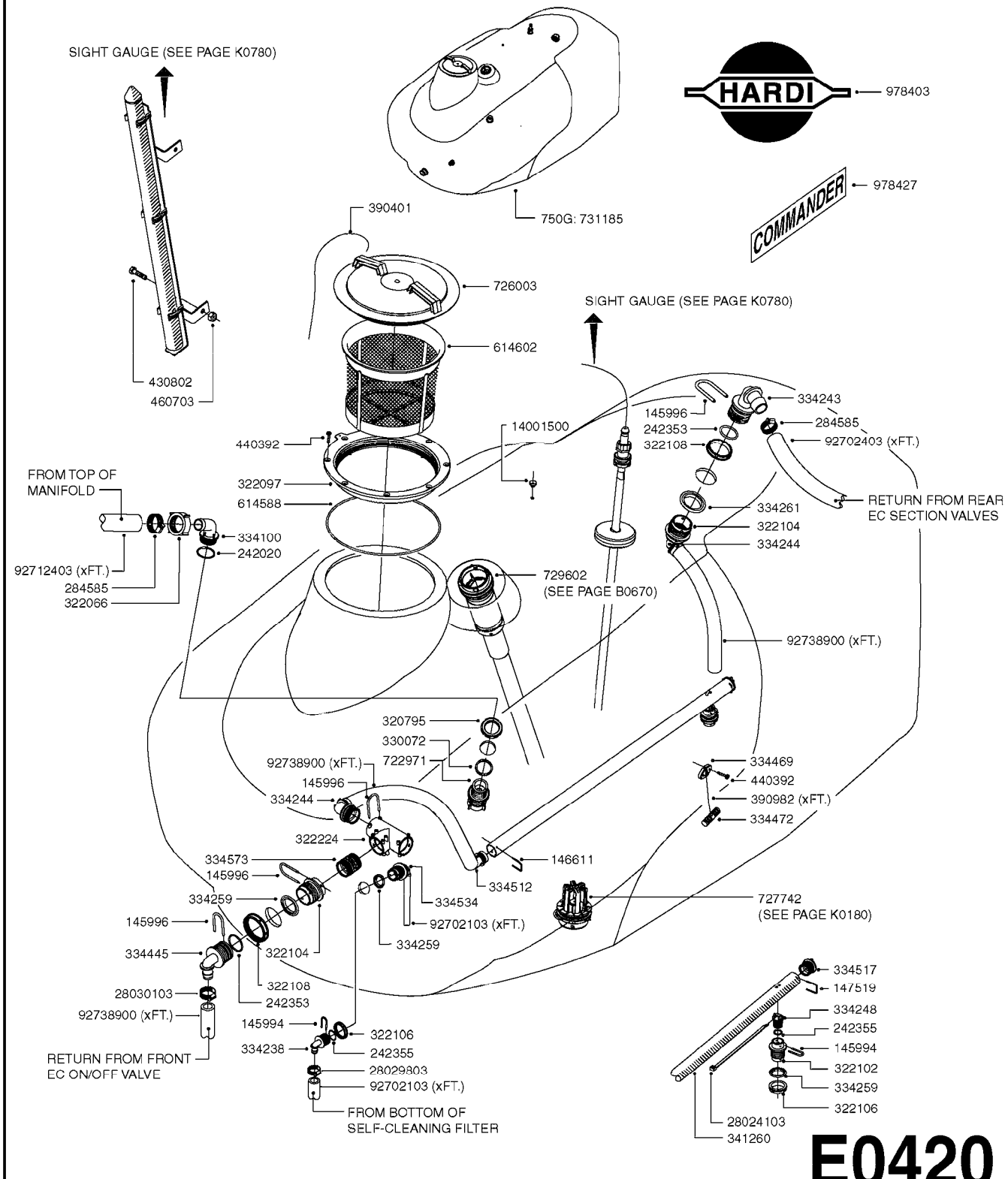

TANK - CM750
E0420-HIN, 01:01:16

Date 12.08.2020 11:39

parts-n°	order qty	description
145994	1	FITT.DK S-40 FORK
145996	1	FITT.DK S-67 FORK
146611	1	CLAMP D3/32-37MM
147519	1	CLAMP D3/32 L=52MM
242020	1	O-RING 39.2 X 3 VITON
242353	1	O-RING 3 X 44.2 VITON
242355	1	O-RING D19.2X3.0 VITON F.S-40
284585	1	CLAMP HOSE GEAR 1" MINI 020
320795	1	FITT.DK NUT 1-1/2" BSP JAMB
322066	1	FITT.DK S-56 NUT
322097	1	THREADED RING F. LID
322102	1	FITT.DK S-40 BULKHEAD
322104	1	FITT.DK S-67 BULKHEAD
322106	1	FITT.DK S-40 BULKHEAD NUT
322108	1	FITT.DK S-67 BULKHEAD NUT
322224	1	FITT.DK S-67 TEE
330072	1	O-RING D53.5/D45.5X4
334100	1	FITT.DK S-61 ELB.1" 110 DEG.
334238	1	FITT.DK S-40 ELB.1/2"
334243	1	FITT.DK S-67 ELB.1"
334244	1	FITT.DK S-67 ELB.1-1/4"
334248	1	FITT.DK S-40 PLUG
334259	1	GASKET F. S-40 BULKHEAD
334261	1	GASKET F. S-67 BULKHEAD
334445	1	FITT.DK S-67 ELB.1-1/2"
334469	1	CLEVIS F.CORD TOP DRAIN ASSY.
334472	1	HANDLE FOR TOP DRAIN
334512	1	FITT.DK SPEC.ELB.1-1/4"110DEG
334517	1	END CAP F. SPARGER TUBE
334534	1	CLAMP HOSE PLASTIC 1/2"
334573	1	FITT.DK S-67 CONNECTOR
341260	1	SPARGE TUBE COMMANDER
390401	1	CORD NYLON F.LID 900MM
390982	1	CORD NYLON 4000MM
430802	1	BOLT HEX 8.8 DEL M12X75
440392	1	SCREW 6.3 X 25.0 DIN7981C TORX
460703	1	NUT HEX M12X1.75 LOCK DIN985A2 SS
614588	1	SEAL F. LID
614602	1	FILTER BASKET
722971	1	SAFETY VALVE SCF 217PSI(15BAR)
726003	1	LID F. TANK
727742	1	TOP DRAIN CORD TYPE
729602	1	TOP SUCTION KIT NAV 2"
731185	1	TANK ASSY COMPLETE CM750
978403	1	DECAL COMPANY 280 X 450
978427	1	DECAL COMMANDER 125 X 600MM
14001500	1	GROMMET F.TOP DRAIN CORD
28024103	1	TIE STRAP L=8" x W=3/16"
28029803	1	CLAMP HOSE GEAR P1/2" 6708
28030103	1	CLAMP HOSE GEAR P5/4-S1.5"6724
92702103	1	HOSE R X1/2" X300PSI WP X0012"
92702403	1	HOSE PVC SUCT GRAY 1"
92712403	1	HOSE R X1" X300PSI WP X0012"
92738900	1	HOSE R X PVC X 1-1/4" 0012"

TANK - CM+750
E0430-HIN, 23:08:18

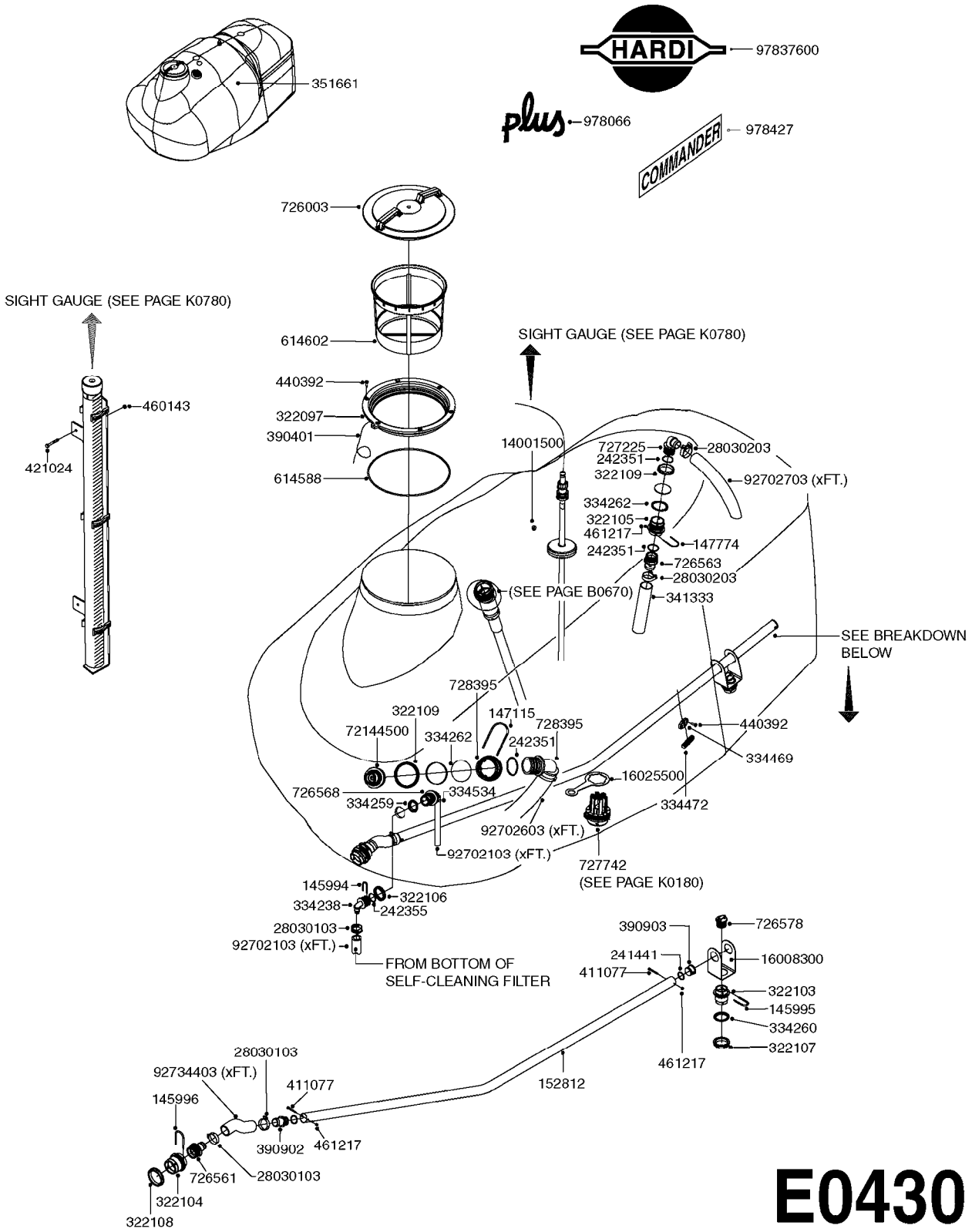

E0430

Agroparts: www.HARDI-INTERNATIONAL.com

TANK - CM+750
E0430-HIN, 23:08:18

Date 12.08.2020 11:39

parts-n°	order qty	description
145994	1	FITT.DK S-40 FORK
145995	1	FITT.DK S-53 FORK
145996	1	FITT.DK S-67 FORK
147115	1	FITT.DK S-93 FORK SPECIAL
147774	1	FITT.DK S-93 FORK W. M5 THREAD
152812	1	SPARGE TUBE CM750+
241441	1	O-RING D29.3X3
242351	1	O-RING D69.5X3.0 VITON F.S-93
242355	1	O-RING D19.2X3.0 VITON F.S-40
322097	1	THREADED RING F. LID
322103	1	FITT.DK S-53 BULKHEAD
322104	1	FITT.DK S-67 BULKHEAD
322105	1	FITT.DK S-93 BULKHEAD DOUBLE
322106	1	FITT.DK S-40 BULKHEAD NUT
322107	1	FITT.DK S-53 BULKHEAD NUT
322108	1	FITT.DK S-67 BULKHEAD NUT
322109	1	FITT.DK S-93 BULKHEAD NUT
334238	1	FITT.DK S-40 ELB.1/2"
334259	1	GASKET F. S-40 BULKHEAD
334260	1	GASKET F. S-53 BULKHEAD
334262	1	GASKET F.S-93 BULKHEAD
334469	1	CLEVIS F.CORD TOP DRAIN ASSY.
334472	1	HANDLE FOR TOP DRAIN
334534	1	CLAMP HOSE PLASTIC 1/2"
341333	1	TUBE Ø57/Ø52 L=1500 BLACK PE
351661	1	TANK RAW CM+ 750
390401	1	CORD NYLON F.LID 900MM
390902	1	SPARGE TUBE FITT FRONT
390903	1	CAP SPARGE TUBE
411077	1	SCREW M5X45 STAINLESS
421024	1	BOLT HEX 8.8 DEL M8X60
440392	1	SCREW 6.3 X 25.0 DIN7981C TORX
460143	1	LOCK NUT M8 SST A2 DIN985
461217	1	NUT HEX M5 LOCK
614588	1	SEAL F. LID
614602	1	FILTER BASKET
726003	1	LID F. TANK
726561	1	FITT.DK S-67 STR.1-1/4" O-RING
726563	1	FITT.DK S-93 STR 2" W/O-RING
726568	1	FITT.DK.S-53 HB 1/2"90 W/O-RING
726578	1	FITT.DK S53 PLUG WITH O-RING
727225	1	FITT.DK S-93 ELB.2'PVC W/ORING
727742	1	TOP DRAIN CORD TYPE
728395	1	FITT.DK S-93 ELB.1-1/2" 90 DEG
978066	1	DECAL PLUS
978427	1	DECAL COMMANDER 125 X 600MM
14001500	1	GROMMET F.TOP DRAIN CORD
16008300	1	BRACKET SPARGE TUBE
16025500	1	TANK SPACER SIGHT GAUGE
28030103	1	CLAMP HOSE GEAR P5/4-S1.5"6724
28030203	1	CLAMP HOSE T-BOLT S2" 235-67
72144500	1	SAFETY VALVE 15 BAR S93
92702103	1	HOSE R X1/2" X300PSI WP X0012"
92702603	1	HOSE PVC SUCT GRAY 1-1/2"
92702703	1	HOSE PVC SUCT GRAY 2"
92734403	1	HOSE R X5/4" X200PSI WP X0012"
97837600	1	HARDI LOGO Ø282X450 F.METAL/ PLASTIC 3D

FRAME CM 750
E0440-HIN, 01:01:16

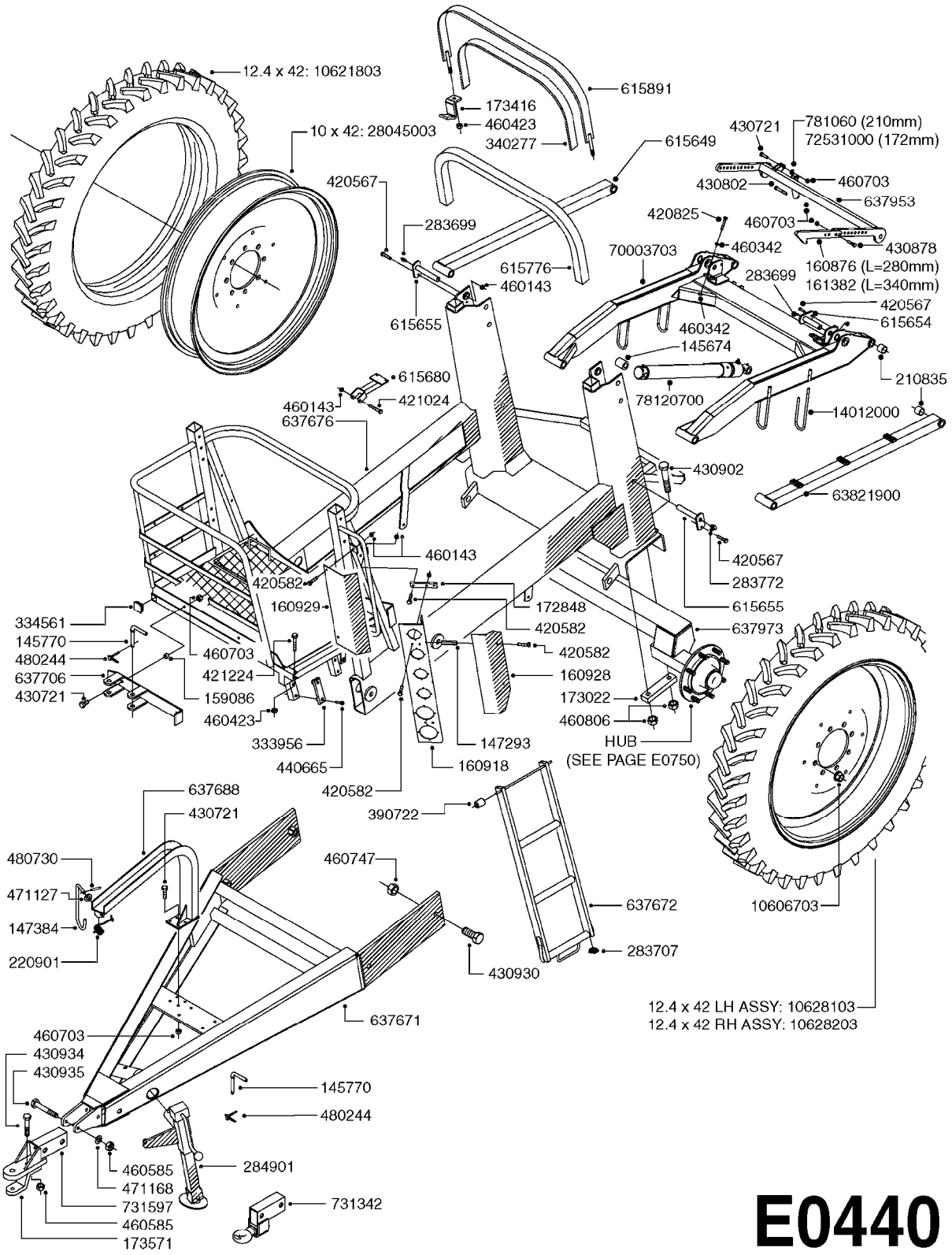

E0440

Agroparts: www.HARDI-INTERNATIONAL.com

FRAME CM 750
E0440-HIN, 01:01:16

Date 12.08.2020 11:39

parts-n°	order qty	description
145674	1	DISTANCE RING 0 40/25 X 42.5
145770	1	LOCKING PAWL D16X110
147293	1	STUD M8 FEMALE L=80
147384	1	HOOK FOR PTO CM
159086	1	BUSHING D16.0/13.0 L=10MM
160876	1	HOOK F.TRANSPORT LOCK L=280MM
160918	1	BRACKET F. MANIFOLD CM
160928	1	COVER F. MANIFOLD RIGHT CM
160929	1	COVER F. MANIFOLD LEFT CM
161382	1	HOOK F.TRANSPORT LOCK L=340MM
172848	1	FLATBAR 30 X 8 L=140
173022	1	FLATBAR 50X30 L=218/2XD22
173416	1	TANK STRAP BRACKET CM750
173571	1	FLATBAR F. USA HITCH CM750
210835	1	BUSHING D28/25 L=25
220901	1	SPRING F. PTO HOOK CM
283699	1	GREASE NIPPLE M6X1
283707	1	PLUG 50X20X2
283772	1	GREASE NIPPLE M6X1 90°
284901	1	JACK COMPLETE FOR CM750
333956	1	SLIDE SHOE 91X25X10
334561	1	PLUG 50x50x2 F.SQ.TUBE
340277	1	TANK PACKING - 40mm WIDE x 12"
390722	1	BUSHING D26/11 L=32 F.LADDER
420567	1	BOLT HEX 8.8 DEL M8X30 FT
420582	1	BOLT HEX 8.8 DEL M8X20 FT A2
420825	1	BOLT HEX 8.8 DEL M10X65
421024	1	BOLT HEX 8.8 DEL M8X60
421224	1	BOLT HEX 8.8 DEL M10X55
430721	1	BOLT HEX 8.8 DEL M12X40 FT
430802	1	BOLT HEX 8.8 DEL M12X75
430878	1	BOLT HEX 8.8 DEL M12X45 DIN931
430902	1	BOLT HEX 8.8 M20X150
430930	1	BOLT HEX 8.8 DEL M24X70
430934	1	BOLT HEX 8.8 DEL M16X80
430935	1	BOLT HM16-130/44 8.8 DAC DIN931
440665	1	SCREW M4.2X16 STAINLESS
460143	1	LOCK NUT M8 SST A2 DIN985
460342	1	NUT HEX M10 DEL DIN934
460423	1	NUT HEX M10X1.50 LOCK DIN985A2 SS
460585	1	LOCKING NUT M16 DIN985 A2 SS
460703	1	NUT HEX M12X1.75 LOCK DIN985A2 SS
460747	1	NUT HEX M24 LOCK
460806	1	NUT HEX M20X2.50 LOCK DIN985A2 SS
471127	1	WASHER, M12, Ø24/13X24X2.5 SS
471168	1	PAIR OF WASHERS NL16 17X25,4x3,4
480244	1	PIN SNAP D4.5
480730	1	SPRING DOWEL PIN 5X30 SST
615649	1	ARM UPPER F. PARALIFT
615654	1	PIN D25 X 123 F. PARALIFT
615655	1	PIN D25 X 156 F. PARALIFT
615680	1	MOUNT BKT.F.EC ON/OFF CM875
615776	1	BRACE FOR FRAME CM
615891	1	TANK STRAP CM750 L=68.5"
637671	1	DRAWBAR WELDMENT CM750
637672	1	LADDER F.CM
637676	1	PLATFORM CM750
637688	1	PTO SUPPORT ARM F. CM
637706	1	JACK STORAGE BRACKET
637953	1	TRANSPORT SAFETY HOOK ARM ASSY
637973	1	AXLE W/M CM 750

FRAME CM 750
E0440-HIN, 01:01:16

Date 12.08.2020 11:39

parts-n°	order qty	description
731342	1	HITCH SWIVEL KIT F. CM750
731597	1	HITCH CLEVIS KIT F.CM750
781060	1	CYLINDER D25/12-50 L=210mm
10606703	1	NUT HEX NF 5/8" FLANGED F.STUD
10621803	1	TIRE 12.4 X 42' 10 PLY R1
10628103	1	TIRE ASSY 12.4X42 10PLY 8BLTL
10628203	1	TIRE ASSY 12.4X42 10PLY 8BLTR
14012000	1	HOOK FOR HOSES PARALIFT
28045003	1	RIM 42X10 8/8/6 2.31-OS GRAY
63821900	1	PARALIFT ARM W/MOUNTS
70003703	1	PARALIFT CM BENT REINFORCED
72531000	1	CYL. D25/12-50/78124200 W/FITT
78120700	1	SIN.CYL.Ø60/25-725 2XØ25 LEFT

FRAME - CM+750
E0450-HIN, 01:01:16

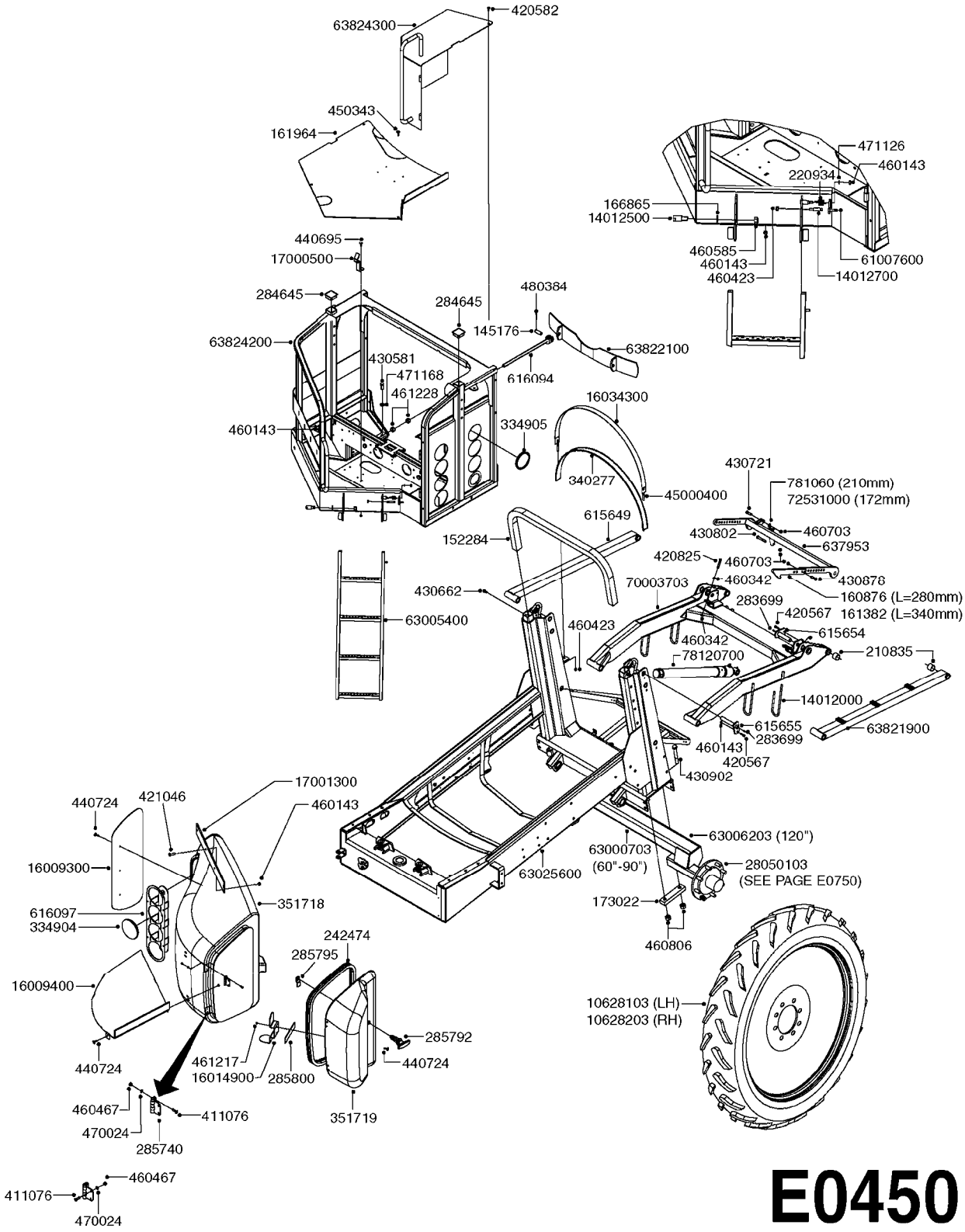

Agroparts: www.HARDI-INTERNATIONAL.com

FRAME - CM+750
E0450-HIN, 01:01:16

Date 12.08.2020 11:39

parts-n°	order qty	description
145176	1	PIN D19.8 X 60
152284	1	CROSSBAR F. FRAME TOWERS CM+
160876	1	HOOK F.TRANSPORT LOCK L=280MM
161382	1	HOOK F.TRANSPORT LOCK L=340MM
161964	1	PLATEFORM DECK PLATE CM+ 750
166865	1	WASHER D35/D25X2
173022	1	FLATBAR 50X30 L=218/2XD22
210835	1	BUSHING D28/25 L=25
220934	1	LAT.PRESS.SPRING D20/3 L=25 SS
242474	1	SEAL 16X28XL=' LOCKER DOOR CM+
283699	1	GREASE NIPPLE M6X1
284645	1	PLUG 60x60x2
285740	1	HINGE
285792	1	LATCH LOCKER DOOR CM+
285795	1	LATCH PLATE LOCKER DOOR CM+
285800	1	VELCRO BAND
334904	1	PLUG D.108mm
334905	1	PLUG D.138mm
340277	1	TANK PACKING - 40mm WIDE x 12"
351718	1	LOCKER FRONT CM+
351719	1	DOOR LOCKER FRONT CM+
411076	1	SCREW M5X16 STAINLESS
420567	1	BOLT HEX 8.8 DEL M8X30 FT
420582	1	BOLT HEX 8.8 DEL M8X20 FT A2
420825	1	BOLT HEX 8.8 DEL M10X65
421046	1	BOLT HEX M8X25/25 A2 SS DIN933
430581	1	BOLT HEX 8.8 DEL M16X40 FT
430662	1	BOLT HEX 8.8 DEL M12X20 FT
430721	1	BOLT HEX 8.8 DEL M12X40 FT
430802	1	BOLT HEX 8.8 DEL M12X75
430878	1	BOLT HEX 8.8 DEL M12X45 DIN931
430902	1	BOLT HEX 8.8 M20X150
440695	1	BOLT CARRIAGE M8X25
440724	1	CARRIAGE BOLT M5X20
450343	1	SCREW M8X30 ALLEN HEAD C/S SS
460143	1	LOCK NUT M8 SST A2 DIN985
460342	1	NUT HEX M10 DEL DIN934
460423	1	NUT HEX M10X1.50 LOCK DIN985A2 SS
460467	1	NUT HEX M5 GALV.
460585	1	LOCKING NUT M16 DIN985 A2 SS
460703	1	NUT HEX M12X1.75 LOCK DIN985A2 SS
460806	1	NUT HEX M20X2.50 LOCK DIN985A2 SS
461217	1	NUT HEX M5 LOCK
461228	1	NUT HEX M20
470024	1	WASHER D5.3 LOCK
471126	1	WASHER, M8, Ø16/ 8.4X 1.6, SS
471168	1	PAIR OF WASHERS NL16 17X25,4x3,4
480384	1	PIN COTTER 3/16 x 1-1/2"
615649	1	ARM UPPER F. PARALIFT
615654	1	PIN D25 X 123 F. PARALIFT
615655	1	PIN D25 X 156 F. PARALIFT
616094	1	THREADED FORK PLATFORM CM+
616097	1	MOUNT BRACKET GAUGES CM+
637953	1	TRANSPORT SAFETY HOOK ARM ASSY
781060	1	CYLINDER D25/12-50 L=210mm
10628103	1	TIRE ASSY 12.4X42 10PLY 8BLTL
10628203	1	TIRE ASSY 12.4X42 10PLY 8BLTR
14012000	1	HOOK FOR HOSES PARALIFT
14012500	1	THREADED PIN M16X62
14012700	1	PIN TREADED M8-1.25X58L
16009300	1	SHIELD F. FRONT LOCKER CM+

parts-n°	order qty	description
16009400	1	SHELF F. LOCKER CM+
16014900	1	BKT F. FIRE EXTIG. CM+
16034300	1	TANK STRAP 2000mm CM+750
17000500	1	MT BKT CLEAN WATER BOT. CM+
17001300	1	BRACKET 60X6 L=536
28050103	1	HUB F 3" 758 7500# PACKAGE
45000400	1	T-BOLT SPECIAL F.TANK STRAP ES
61007600	1	HOOK FOR STEPS CM+
63000703	1	AXLE INSERT W/M CM750
63005400	1	LADDER CM+
63006203	1	AXLE INSERT C/W SPDL 120"CM750
63025600	1	MAIN FRAME 750 PLUS
63821900	1	PARALIFT ARM W/MOUNTS
63822100	1	TANK FRONT RESTRAINT
63824200	1	WORK PLATFORM 750 PLUS
63824300	1	MANIFOLD SHIELD CM+
70003703	1	PARALIFT CM BENT REINFORCED
72531000	1	CYL. D25/12-50/78124200 W/FITT
78120700	1	SIN.CYL.Ø60/25-725 2XØ25 LEFT

TANK-800/1000 NAV&NAV M-CENT.
E0460-HIN, 01:01:16

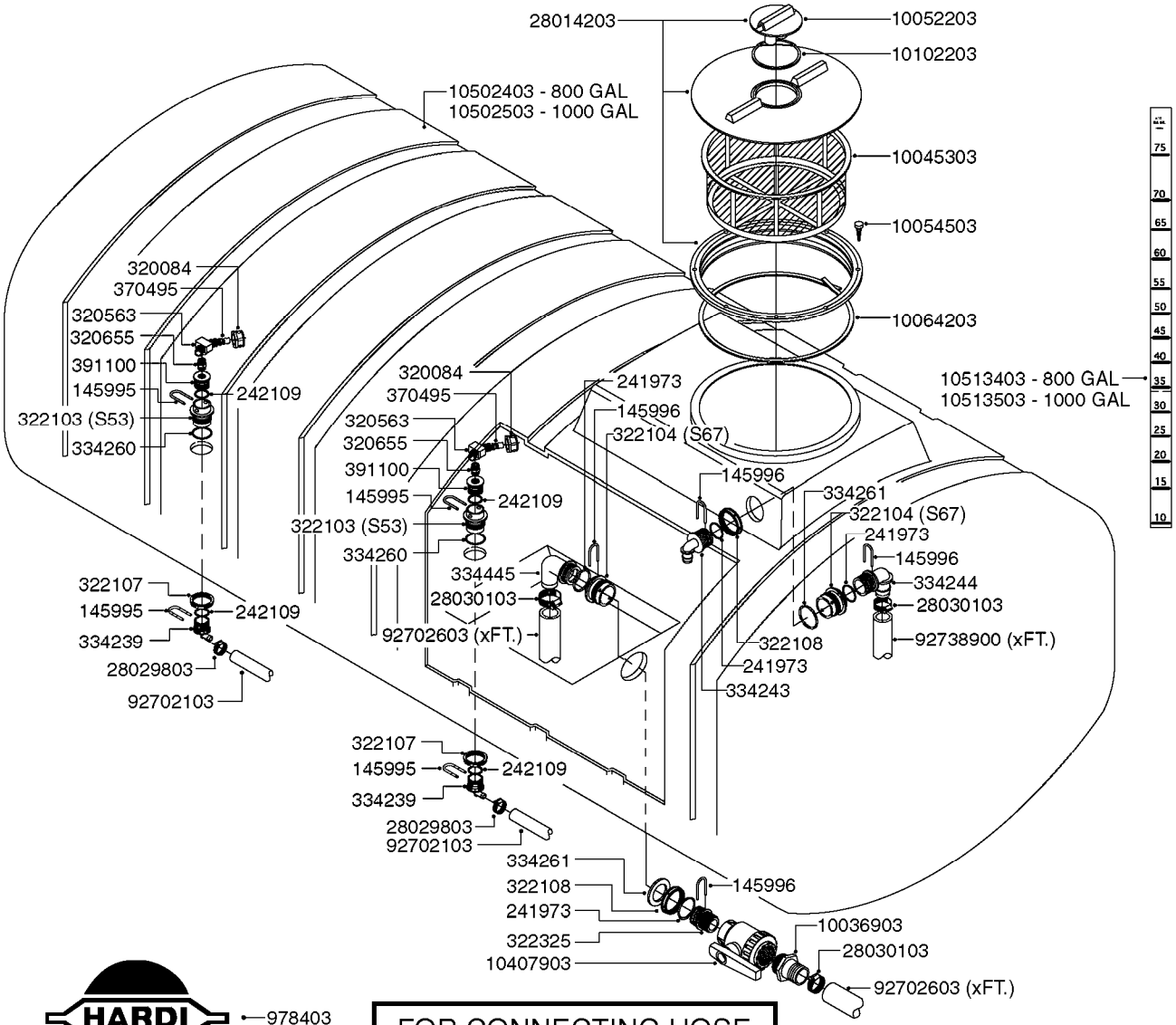

978403

FOR CONNECTING HOSE FITTINGS, SEE SECTION L

E0460

Agroparts: www.HARDI-INTERNATIONAL.com

TANK-800/1000 NAV&NAV M-CENT.
E0460-HIN, 01:01:16

Date 12.08.2020 11:39

parts-n°	order qty	description
145995	1	FITT.DK S-53 FORK
145996	1	FITT.DK S-67 FORK
241973	1	O-RING Ø3 X 44.2 70 SHORES NITRIL
242109	1	O-RING D32.2x3.0
320084	1	FITT.DK NUT 1/2" BSP
320563	1	FITT.DK 3 WAY 1/2" 110 DEG.
320655	1	FITT.DK HN 1/2"-1/2" BSP
322103	1	FITT.DK S-53 BULKHEAD
322104	1	FITT.DK S-67 BULKHEAD
322107	1	FITT.DK S-53 BULKHEAD NUT
322108	1	FITT.DK S-67 BULKHEAD NUT
322325	1	FITT.DK S-67 X 1-1/2"BSP LONG
334239	1	FITT.DK S-53 ELB.1/2"
334243	1	FITT.DK S-67 ELB.1"
334244	1	FITT.DK S-67 ELB.1-1/4"
334260	1	GASKET F. S-53 BULKHEAD
334261	1	GASKET F. S-67 BULKHEAD
334445	1	FITT.DK S-67 ELB.1-1/2"
370495	1	NOZZLE INJECTOR 5066-3.0
391100	1	FITT.DK S-53THREAD INS.1/2"BSP
978403	1	DECAL COMPANY 280 X 450
10036903	1	FITT.PO.HB 1.50X1.50 IMB1212
10045303	1	FILTER BASKET 16"
10052203	1	LID VENT ASSY
10054503	1	SCREW 3/4" SELF TAPPING
10064203	1	SET SEALING SPONGE 1 Ft BULK
10102203	1	GASKET F.16" LID BREATHER
10407903	1	BALL VALVE 1-1/2" MCPHEE
10502403	1	TANK RAW NAV.800 GAL.
10502503	1	TANK RAW NAV.1000 GAL.
10513403	1	DECAL SCALE 800 GAL.
10513503	1	DECAL SCALE 1000 GAL
28014203	1	LID ASSY. (3-PC.) 16" ARAG
28029803	1	CLAMP HOSE GEAR P1/2" 6708
28030103	1	CLAMP HOSE GEAR P5/4-S1.5"6724
92702103	1	HOSE R X1/2" X300PSI WP X0012"
92702603	1	HOSE PVC SUCT GRAY 1-1/2"
92738900	1	HOSE R X PVC X 1-1/4" 0012"

TANK-800/1000 NAV&NAV M-DIAPH.
E0470-HIN, 01:01:16

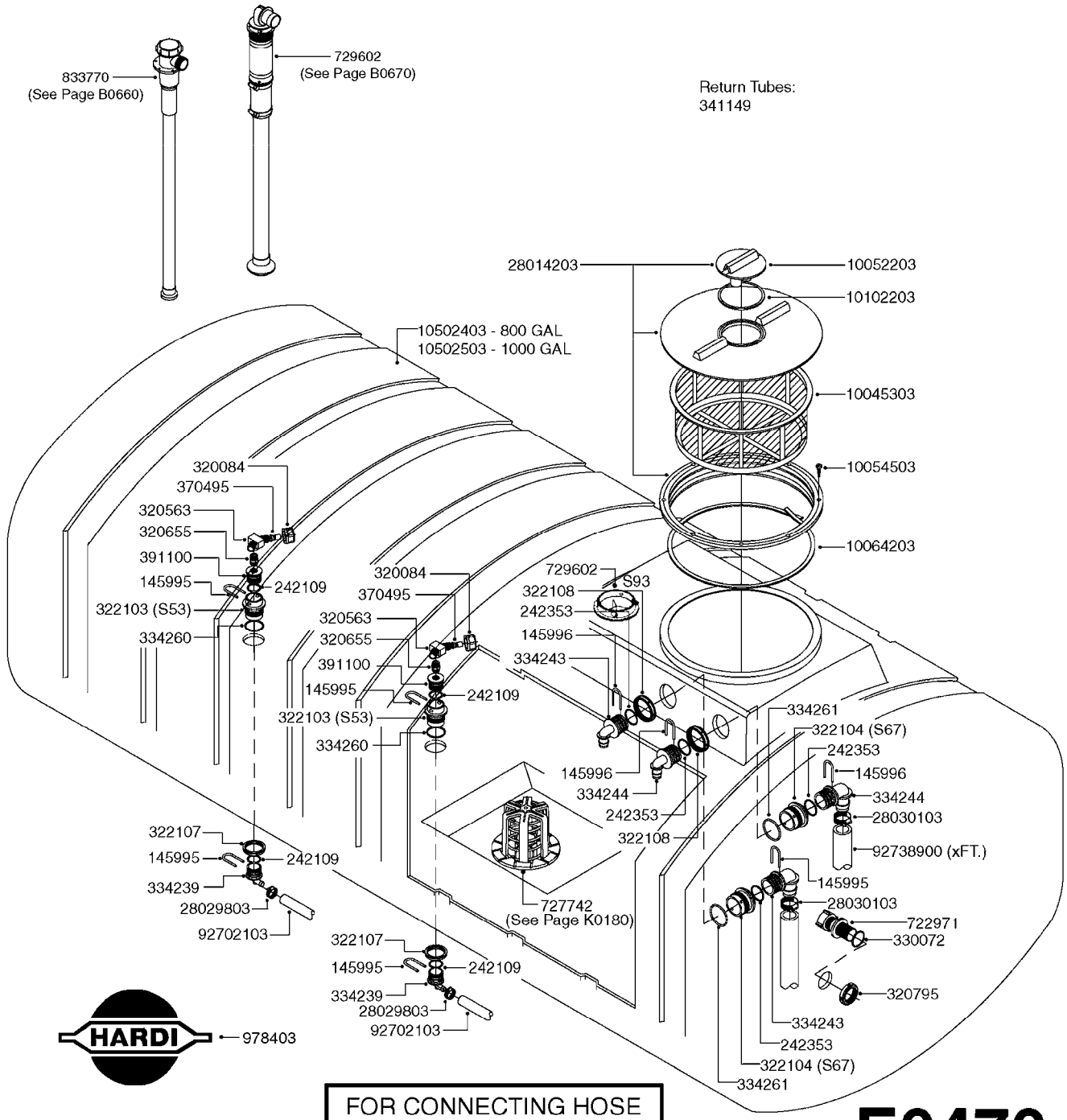

FOR CONNECTING HOSE FITTINGS, SEE SECTION L

E0470

Agroparts: www.HARDI-INTERNATIONAL.com

TANK-800/1000 NAV&NAV M-DIAPH.
E0470-HIN, 01:01:16

Date 12.08.2020 11:39

parts-n°	order qty	description
145995	1	FITT.DK S-53 FORK
145996	1	FITT.DK S-67 FORK
242109	1	O-RING D32.2x3.0
242353	1	O-RING 3 X 44.2 VITON
320084	1	FITT.DK NUT 1/2" BSP
320563	1	FITT.DK 3 WAY 1/2" 110 DEG.
320655	1	FITT.DK HN 1/2"-1/2" BSP
320795	1	FITT.DK NUT 1-1/2" BSP JAMB
322103	1	FITT.DK S-53 BULKHEAD
322104	1	FITT.DK S-67 BULKHEAD
322107	1	FITT.DK S-53 BULKHEAD NUT
322108	1	FITT.DK S-67 BULKHEAD NUT
330072	1	O-RING D53.5/D45.5X4
334239	1	FITT.DK S-53 ELB.1/2"
334243	1	FITT.DK S-67 ELB.1"
334244	1	FITT.DK S-67 ELB.1-1/4"
334260	1	GASKET F. S-53 BULKHEAD
334261	1	GASKET F. S-67 BULKHEAD
341149	1	RETURN TUBE Ø40 L=2000
370495	1	NOZZLE INJECTOR 5066-3.0
391100	1	FITT.DK S-53THREAD INS.1/2"BSP
722971	1	SAFETY VALVE SCF 217PSI(15BAR)
727742	1	TOP DRAIN CORD TYPE
729602	1	TOP SUCTION KIT NAV 2"
833770	1	TOP SUCTION KIT 300/500
978403	1	DECAL COMPANY 280 X 450
10045303	1	FILTER BASKET 16"
10052203	1	LID VENT ASSY
10054503	1	SCREW 3/4" SELF TAPPING
10064203	1	SET SEALING SPONGE 1 Ft BULK
10102203	1	GASKET F.16" LID BREATHER
10502403	1	TANK RAW NAV.800 GAL.
10502503	1	TANK RAW NAV.1000 GAL.
28014203	1	LID ASSY. (3-PC.) 16" ARAG
28029803	1	CLAMP HOSE GEAR P1/2" 6708
28030103	1	CLAMP HOSE GEAR P5/4-S1.5"6724
92702103	1	HOSE R X1/2" X300PSI WP X0012"
92738900	1	HOSE R X PVC X 1-1/4" 0012"

FRAME TR 800/1000 TA
E0480-HIN, 01:01:16

Date 12.08.2020 11:39

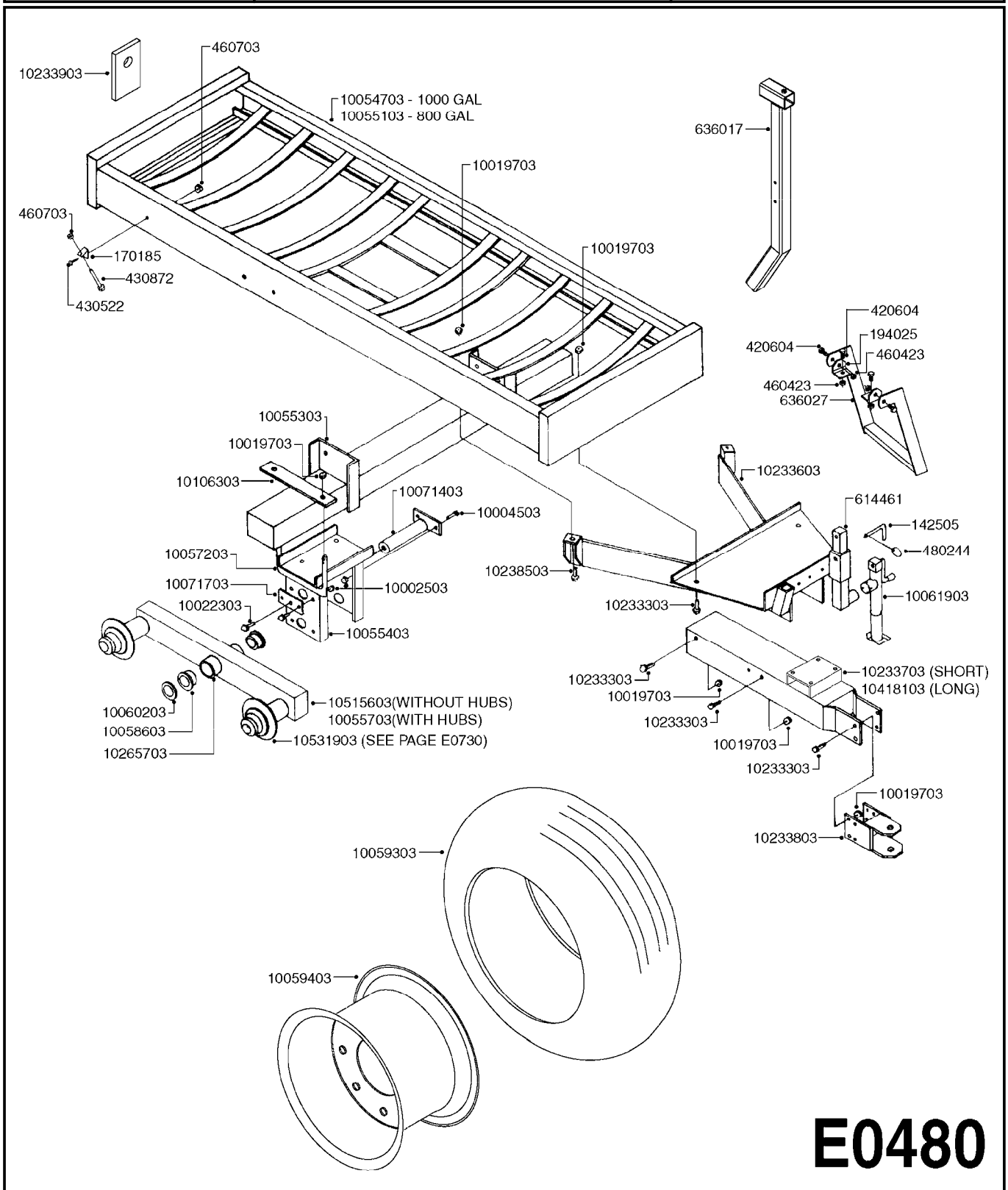

Agroparts: www.HARDI-INTERNATIONAL.com

FRAME TR 800/1000 TA
E0480-HIN, 01:01:16

Date 12.08.2020 11:39

parts-n°	order qty	description
10002503	1	NUT HEX NC 1/2"
10004503	1	BOLT HEX 1/2 NC GR.5 01.50"
10019703	1	NUT HEX NC FHN 3/4-10 Z 5
10022303	1	BOLT HEX 5/8 NC GR.2 01.00"
10054703	1	FRAME W/M TR1000
10055103	1	FRAME W/M TR800
10055303	1	AXLE W/M TR 1000
10055403	1	UPRIGHT W/M TR 1000
10055703	1	TANDEM BEAM & HUB ASSEMBLY
10057203	1	BOLT U 3/4 NC 8-7/8IW8-1/4IL
10058603	1	GARLOCK 2.5"DU 2.5" TA800/1000
10059303	1	SUBSTITUTE 24001303
10059403	1	RIM 15X10 X 8-8-6 +1.062OFFSET
10060203	1	BUSHING 2-9/16X3-1/2X1/8
10061903	1	JACK F300/500/575 5000LB
10071403	1	PIN W/M TR 1000
10071703	1	BRACKET-PIN W/M
10106303	1	U BAR 1000 GAL.
10233303	1	BOLT HEX 3/4 NC GR.5 02.00"
10233603	1	A FRAME & STEP 800/1000
10233703	1	TONGUE 800/1000
10233803	1	HITCH 800/1000
10233903	1	BACKING PLATE 800/1000
10238503	1	BOLT HEX 3/4 NC GR.5 02.50"
10265703	1	GREASE ZERK 5MM PRESS FIT
10418103	1	TONGUE TR800/1000
10515603	1	TANDEM BEAM W/M TR1000 W/SPIN.
10531903	1	HUB ASSY.COMP.F.2-1/8" SPINDLE
142505	1	LOCKING PAWL 12 X 70MM
170185	1	ANGLE BRACKET F. TANKSTRAP
194025	1	BRACKET F.STEP HC650
420604	1	BOLT HEX 8.8 DEL M10X25 FT DIN933
430522	1	BOLT HEX 8.8 DEL M12X25 FT
430872	1	BOLT HEX 8.8 DEL M12X100 FT
460423	1	NUT HEX M10X1.50 LOCK DIN985A2 SS
460703	1	NUT HEX M12X1.75 LOCK DIN985A2 SS
480244	1	PIN SNAP D4.5
614461	1	JACK STAND ATTACHMENT
636017	1	POST FOR EC CONTROL MOUNT
636027	1	STEP F.PLATFORM HC650

FRAME HC 800/1000 SA
E0490-HIN, 01:01:16

Date 12.08.2020 11:39

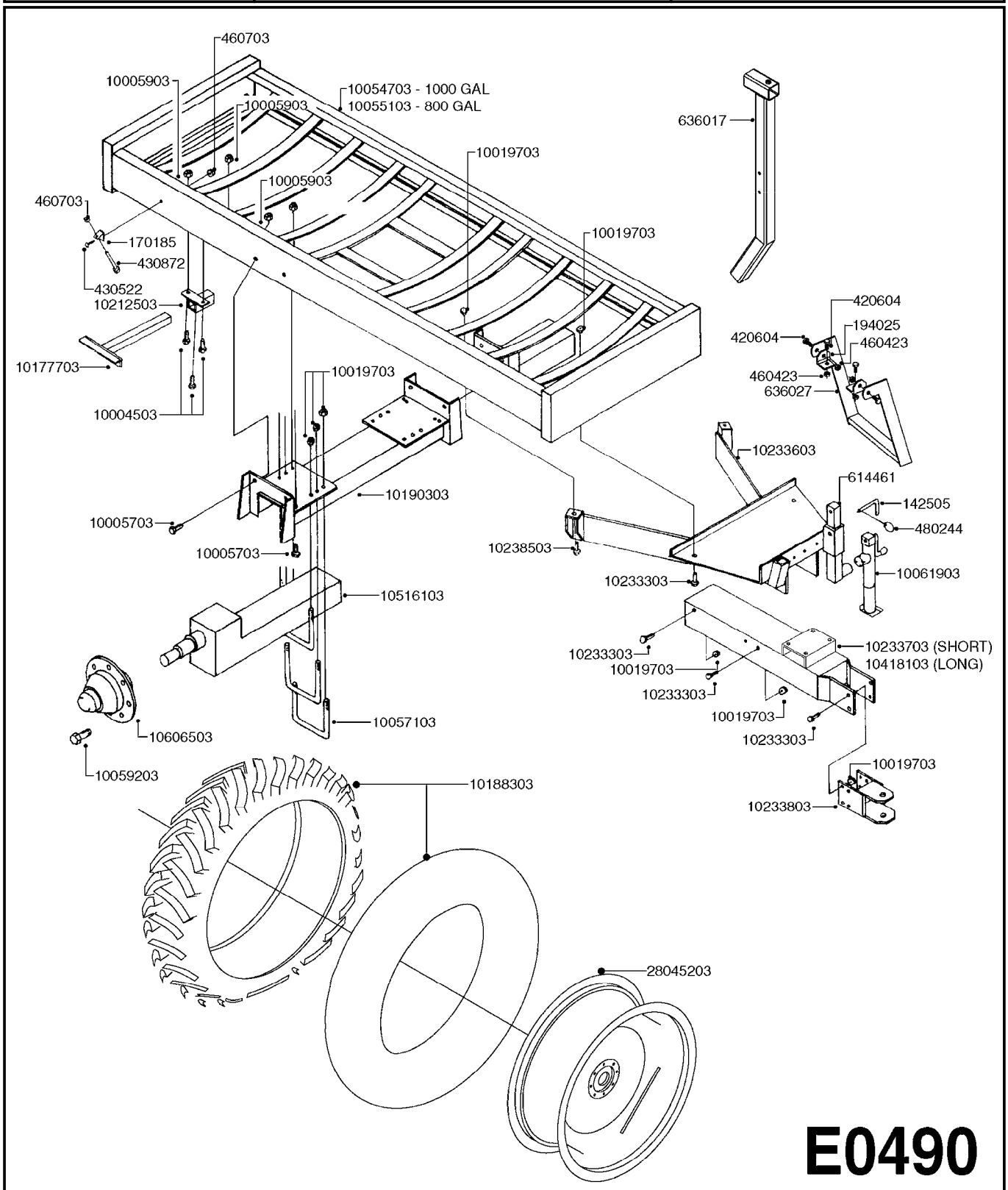

FRAME HC 800/1000 SA
E0490-HIN, 01:01:16

Date 12.08.2020 11:39

parts-n°	order qty	description
142505	1	LOCKING PAWL 12 X 70MM
170185	1	ANGLE BRACKET F. TANKSTRAP
194025	1	BRACKET F.STEP HC650
420604	1	BOLT HEX 8.8 DEL M10X25 FT DIN933
430522	1	BOLT HEX 8.8 DEL M12X25 FT
430872	1	BOLT HEX 8.8 DEL M12X100 FT
460423	1	NUT HEX M10X1.50 LOCK DIN985A2 SS
460703	1	NUT HEX M12X1.75 LOCK DIN985A2 SS
480244	1	PIN SNAP D4.5
614461	1	JACK STAND ATTACHMENT
636017	1	POST FOR EC CONTROL MOUNT
636027	1	STEP F.PLATFORM HC650
10004503	1	BOLT HEX 1/2 NC GR.5 01.50"
10005703	1	BOLT HEX 5/8 NC GR.2 01.50"
10005903	1	NUT HEX NC 5/8" NYLOCK
10019703	1	NUT HEX NC FHN 3/4-10 Z 5
10054703	1	FRAME W/M TR1000
10055103	1	FRAME W/M TR800
10057103	1	BOLT U 3/4 NC 7-7/8IWX7-1/4IL
10059203	1	BOLT WHEEL 9/16"x1-1/4"UNF 90D
10061903	1	JACK F300/500/575 5000LB
10177703	1	SCRAPER MUD ICM VS 500
10188303	1	TIRE 13.6" X 38"
10190303	1	AXLE STRUT W/M 800 GAL.SINGLE
10212503	1	BKT.MUD SCRAPER ICM 500
10233303	1	BOLT HEX 3/4 NC GR.5 02.00"
10233603	1	A FRAME & STEP 800/1000
10233703	1	TONGUE 800/1000
10233803	1	HITCH 800/1000
10238503	1	BOLT HEX 3/4 NC GR.5 02.50"
10418103	1	TONGUE TR800/1000
10516103	1	INSERT W/M 800HC W/SPINDLE
10606503	1	HUB ASSY.NAV550/800/1000 HC
28045203	1	RIM 38X12 8/8/6 1.06-OS GRAY

FRAME - NAVIGATOR HC 800/1000
E0500-HIN, 15:08:16

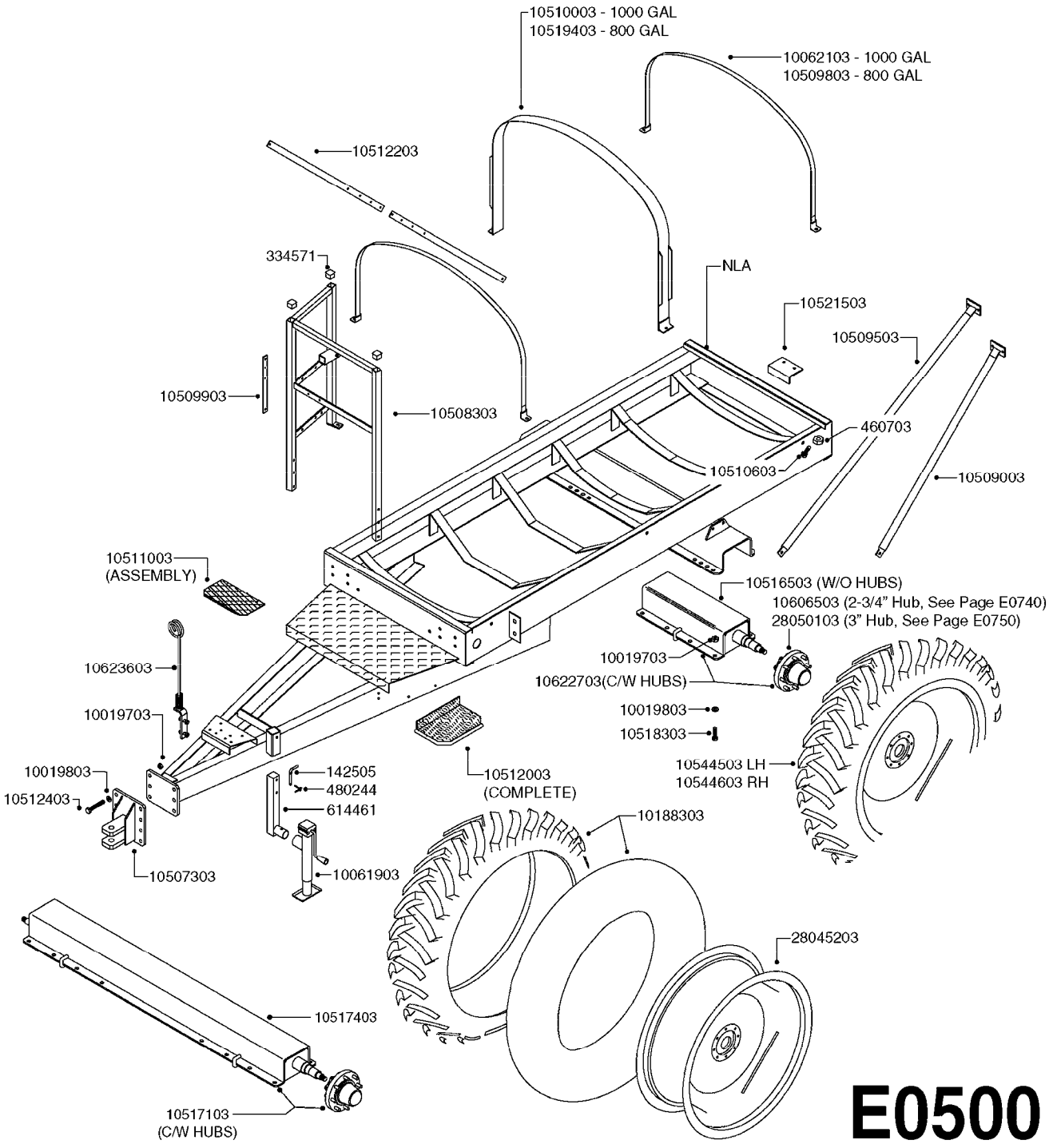

Agroparts: www.HARDI-INTERNATIONAL.com

FRAME - NAVIGATOR HC 800/1000
E0500-HIN, 15:08:16

Date 12.08.2020 11:39

parts-n°	order qty	description
142505	1	LOCKING PAWL 12 X 70MM
334571	1	PLUG 40x40x2 F.SQ.TUBE
460703	1	NUT HEX M12X1.75 LOCK DIN985A2 SS
480244	1	PIN SNAP D4.5
614461	1	JACK STAND ATTACHMENT
10019703	1	NUT HEX NC FHN 3/4-10 Z 5
10019803	1	WASHER LOCK L/W Z 3/4"
10061903	1	JACK F300/500/575 5000LB
10062103	1	STRAP F. NAV M TNK 1000 110"LG
10188303	1	TIRE 13.6" X 38"
10507303	1	CLEVIS NAV.550/800/1000 GAL.
10508303	1	HANDRAIL NAV 800/1000 GAL.
10509003	1	SIDE BRACE NAV8/1000 45-66'EAG
10509503	1	SIDE BRACE NAV8/1000 80-90'EAG
10509803	1	STRAP F.NAV TANK 800 GAL.
10509903	1	FLATBAR F.FILTER
10510003	1	STRAP F.TANK REINFOR.1000 NAV
10510603	1	BOLT F.ANCHOR STRAP
10511003	1	FRONT STEP ASSY.550/800/1000
10512003	1	SIDE STEP ASSY.550/800/1000
10512203	1	FLATBAR SIDE STRAP F.NAV8/1000
10512403	1	BOLT HEX 3/4 NC GR.8 02.25"
10516503	1	INSERT W/M NAV HC W/SPINDLE INCLUDES 3" SPINDLE
10517103	1	AXLE ASSY NAV M 1000 HC 120"
10517403	1	AXLE W/M NAV.HC 120"W/SPINDLES
10518303	1	BOLT HEX 2&3/4 NC GR.8 3.00"
10519403	1	STRAP F.TANK REINFOR.800 NAV
10521503	1	NAV TANK STOP BKT.KIT
10544503	1	TIRE ASSY 13.6 X 38 LH 8BLT HD
10544603	1	TIRE ASSY 13.6 X 38 RH 8BLT HD
10606503	1	HUB ASSY.NAV550/800/1000 HC CONFIRM 2-3/4" SPINDLE
10622703	1	AXLE ASSY NAV M 1000 HC 72-88" INCLUDES 3" SPINDLE
10623603	1	CABLE & HOSE HOLDER NAV.
28045203	1	RIM 38X12 8/8/6 1.06-OS GRAY
28050103	1	HUB F 3" 758 7500# PACKAGE CONFIRM 3" SPINDLE

FRAME-NAV.M HC800/1000 PRE'05
E0510-HIN, 01:01:16

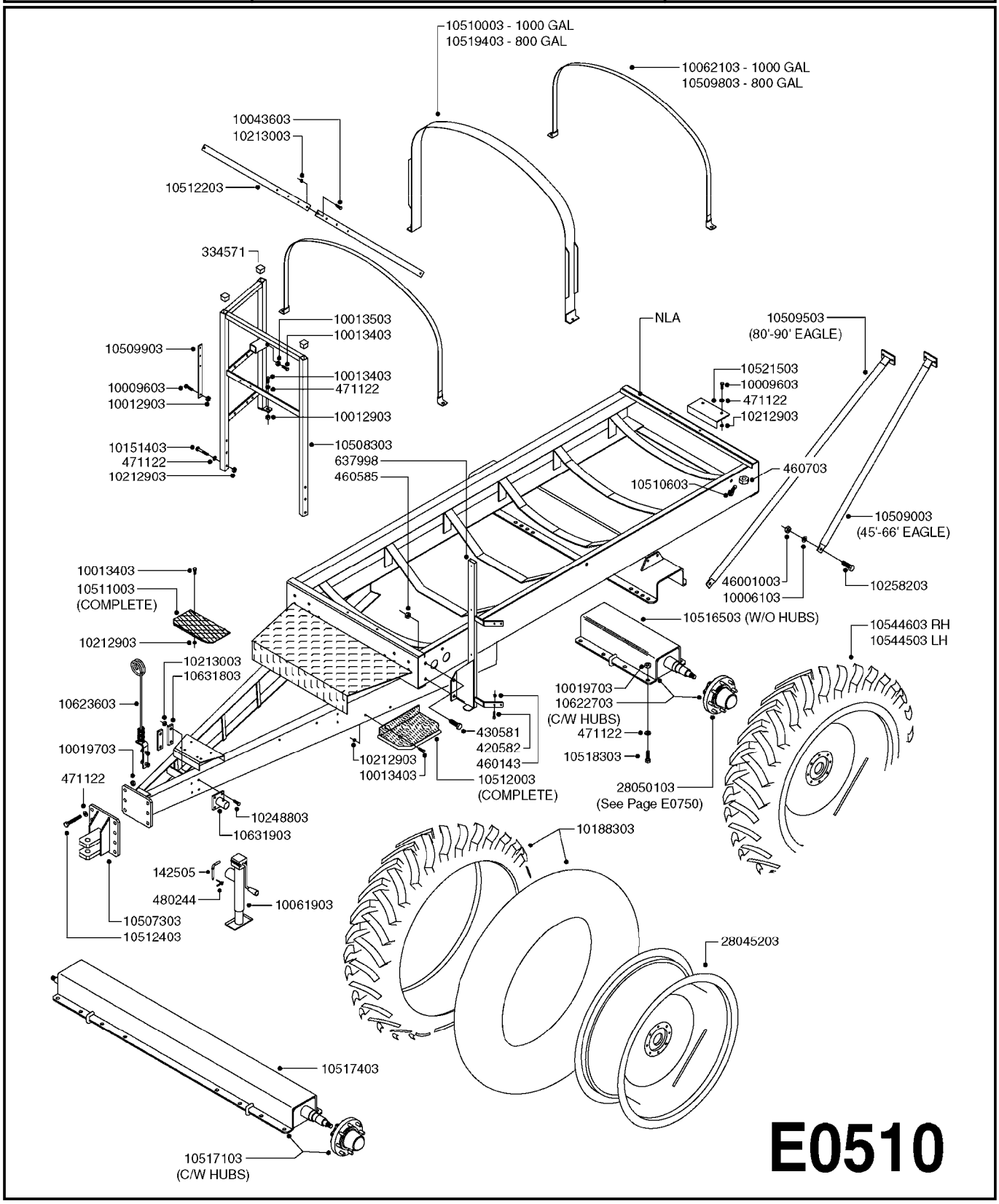

Agroparts: www.HARDI-INTERNATIONAL.com

FRAME-NAV.M HC800/1000 PRE'05
E0510-HIN, 01:01:16

Date 12.08.2020 11:39

parts-n°	order qty	description
142505	1	LOCKING PAWL 12 X 70MM
334571	1	PLUG 40x40x2 F.SQ.TUBE
420582	1	BOLT HEX 8.8 DEL M8X20 FT A2
430581	1	BOLT HEX 8.8 DEL M16X40 FT
460143	1	LOCK NUT M8 SST A2 DIN985
460585	1	LOCKING NUT M16 DIN985 A2 SS
460703	1	NUT HEX M12X1.75 LOCK DIN985A2 SS
471122	1	WASHER, M10, Ø20/10.5X 2.0, SS
480244	1	PIN SNAP D4.5
637998	1	MANIFOLD BKT. NAVIGATOR
10006103	1	WASHER PLATE 5/8
10009603	1	BOLT HEX 3/8 NC GR.2 01.00"
10012903	1	PUMP HYPRO C9016 540 RPM 90023
10013403	1	BOLT HEX 3/8-16X1 1/4 HCS Z5
10013503	1	NUT HEX NC 3/8"
10019703	1	NUT HEX NC FHN 3/4-10 Z 5
10043603	1	BOLT HEX 7/16 NC GR.5 01.25"
10061903	1	JACK F300/500/575 5000LB
10062103	1	STRAP F. NAV M TNK 1000 110"LG
10151403	1	BOLT HEX 3/8 NC GR.2 02.50"
10188303	1	TIRE 13.6" X 38"
10212903	1	NUT HEX NC (NYLON LOCK) 3/8"
10213003	1	NUT HEX NC (NYLON LOCK) 7/16"
10248803	1	BOLT HEX 7/16 NC GR.2 02.00"
10258203	1	BOLT HEX 5/8 NC GR.2 02.00"
10507303	1	CLEVIS NAV.550/800/1000 GAL.
10508303	1	HANDRAIL NAV 800/1000 GAL.
10509003	1	SIDE BRACE NAV8/1000 45-66'EAG
10509503	1	SIDE BRACE NAV8/1000 80-90'EAG
10509803	1	STRAP F.NAV TANK 800 GAL.
10509903	1	FLATBAR F.FILTER
10510003	1	STRAP F.TANK REINFOR.1000 NAV
10510603	1	BOLT F.ANCHOR STRAP
10511003	1	FRONT STEP ASSY.550/800/1000
10512003	1	SIDE STEP ASSY.550/800/1000
10512203	1	FLATBAR SIDE STRAP F.NAV8/1000
10512403	1	BOLT HEX 3/4 NC GR.8 02.25"
10516503	1	INSERT W/M NAV HC W/SPINDLE
10517103	1	AXLE ASSY NAV M 1000 HC 120"
10517403	1	AXLE W/M NAV.HC 120"W/SPINDLES
10518303	1	BOLT HEX 2&3/4 NC GR.8 3.00"
10519403	1	STRAP F.TANK REINFOR.800 NAV
10521503	1	NAV TANK STOP BKT.KIT
10544503	1	TIRE ASSY 13.6 X 38 LH 8BLT HD
10544603	1	TIRE ASSY 13.6 X 38 RH 8BLT HD
10622703	1	AXLE ASSY NAV M 1000 HC 72-88"
10623603	1	CABLE & HOSE HOLDER NAV.
10631803	1	FLATBAR 1/4" x 110MM F.JACK
10631903	1	JACK MOUNT NAV550/1000 W/MOUNT
28045203	1	RIM 38X12 8/8/6 1.06-OS GRAY
28050103	1	HUB F 3" 758 7500# PACKAGE
46001003	1	NUT HEX 5/8"-11 NYLOCK

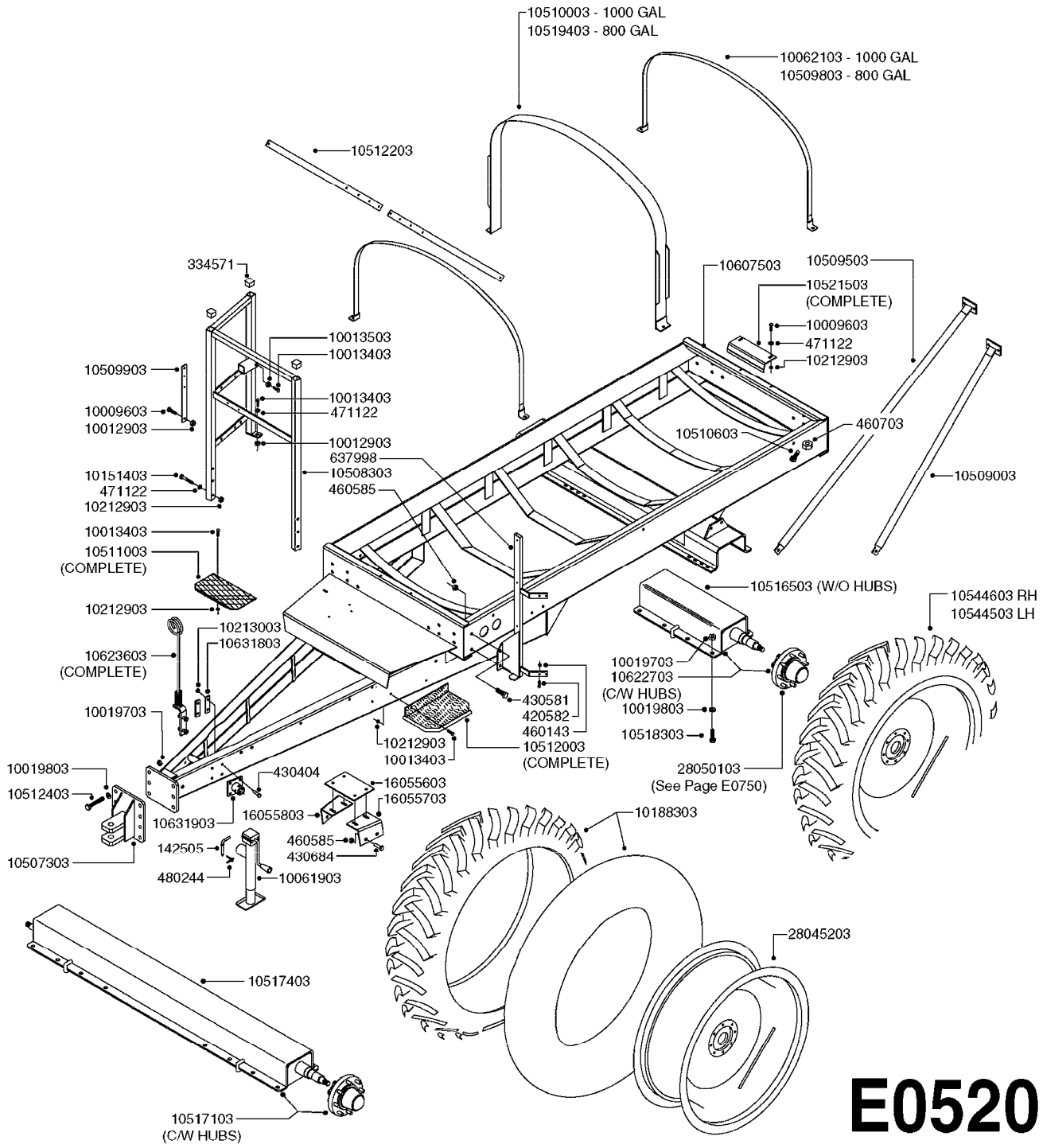
10510003 - 1000 GAL
10519403 - 800 GAL
10062103 - 1000 GAL
10509803 - 800 GAL
10512203
334571
10607503
10509503
10521503
(COMPLETE)
10009603
471122
10212903
10013503
10013403
10509903
10009603
10012903
10013403
471122
10012903
637998
10508303
460585
10510603
460703
10151403
471122
10212903
10509003
10013403
10511003
(COMPLETE)
10212903
10516503 (W/O HUBS)
10544603 RH
10544503 LH
10213003
10631803
10623603
(COMPLETE)
10019703
10622703
(C/W HUBS)
10019803
10518303
430581
420582
460143
10512003
(COMPLETE)
10212903
10013403
10019703
10019803
10512403
430404
16055603
16055703
16055803
10631903
460585
430684
142505
480244
10061903
10507303
28050103
(See Page E0750)
10188303
28045203
10517403
10517103
(C/W HUBS)
E0520

Agroparts: www.HARDI-INTERNATIONAL.com

FRAME-NAV.M HC800/1000 POST'05
E0520-HIN, 15:08:16

Date 12.08.2020 11:39

parts-n°	order qty	description
142505	1	LOCKING PAWL 12 X 70MM
334571	1	PLUG 40x40x2 F.SQ.TUBE
420582	1	BOLT HEX 8.8 DEL M8X20 FT A2
430404	1	BOLT HEX 8.8 DEL M12X50
430581	1	BOLT HEX 8.8 DEL M16X40 FT
430684	1	BOLT HEX 8.8 DEL M16X30 FT
460143	1	LOCK NUT M8 SST A2 DIN985
460585	1	LOCKING NUT M16 DIN985 A2 SS
460703	1	NUT HEX M12X1.75 LOCK DIN985A2 SS
471122	1	WASHER, M10, Ø20/10.5X 2.0, SS
480244	1	PIN SNAP D4.5
637998	1	MANIFOLD BKT. NAVIGATOR
10009603	1	BOLT HEX 3/8 NC GR.2 01.00"
10012903	1	PUMP HYPRO C9016 540 RPM 90023
10013403	1	BOLT HEX 3/8-16X1 1/4 HCS Z5
10013503	1	NUT HEX NC 3/8"
10019703	1	NUT HEX NC FHN 3/4-10 Z 5
10019803	1	WASHER LOCK L/W Z 3/4"
10061903	1	JACK F300/500/575 5000LB
10062103	1	STRAP F. NAV M TNK 1000 110"LG
10151403	1	BOLT HEX 3/8 NC GR.2 02.50"
10188303	1	TIRE 13.6" X 38"
10212903	1	NUT HEX NC (NYLON LOCK) 3/8"
10213003	1	NUT HEX NC (NYLON LOCK) 7/16"
10507303	1	CLEVIS NAV.550/800/1000 GAL.
10508303	1	HANDRAIL NAV 800/1000 GAL.
10509003	1	SIDE BRACE NAV8/1000 45-66'EAG
10509503	1	SIDE BRACE NAV8/1000 80-90'EAG
10509803	1	STRAP F.NAV TANK 800 GAL.
10509903	1	FLATBAR F.FILTER
10510003	1	STRAP F.TANK REINFOR.1000 NAV
10510603	1	BOLT F.ANCHOR STRAP
10511003	1	FRONT STEP ASSY.550/800/1000
10512003	1	SIDE STEP ASSY.550/800/1000
10512203	1	FLATBAR SIDE STRAP F.NAV8/1000
10512403	1	BOLT HEX 3/4 NC GR.8 02.25"
10516503	1	INSERT W/M NAV HC W/SPINDLE
10517103	1	AXLE ASSY NAV M 1000 HC 120"
10517403	1	AXLE W/M NAV.HC 120"W/SPINDLES
10518303	1	BOLT HEX 2&3/4 NC GR.8 3.00"
10519403	1	STRAP F.TANK REINFOR.800 NAV
10521503	1	NAV TANK STOP BKT.KIT
10544503	1	TIRE ASSY 13.6 X 38 LH 8BLT HD
10544603	1	TIRE ASSY 13.6 X 38 RH 8BLT HD
10607503	1	FRAME NAVIGATOR 800/1000-98
10622703	1	AXLE ASSY NAV M 1000 HC 72-88"
10623603	1	CABLE & HOSE HOLDER NAV.
10631803	1	FLATBAR 1/4" x 110MM F.JACK
10631903	1	JACK MOUNT NAV550/1000 W/MOUNT
16055603	1	PUMP MT. PLATE DIA. NAV. M
16055703	1	PUMP MT. PLATE L.H. DIA. NAV.M
16055803	1	PUMP MT. PLATE R.H. DIA. NAV.M
28045203	1	RIM 38X12 8/8/6 1.06-OS GRAY
28050103	1	HUB F 3" 758 7500# PACKAGE

FRAME - NAVIGATOR TA 800/1000
E0530-HIN, 01:01:16

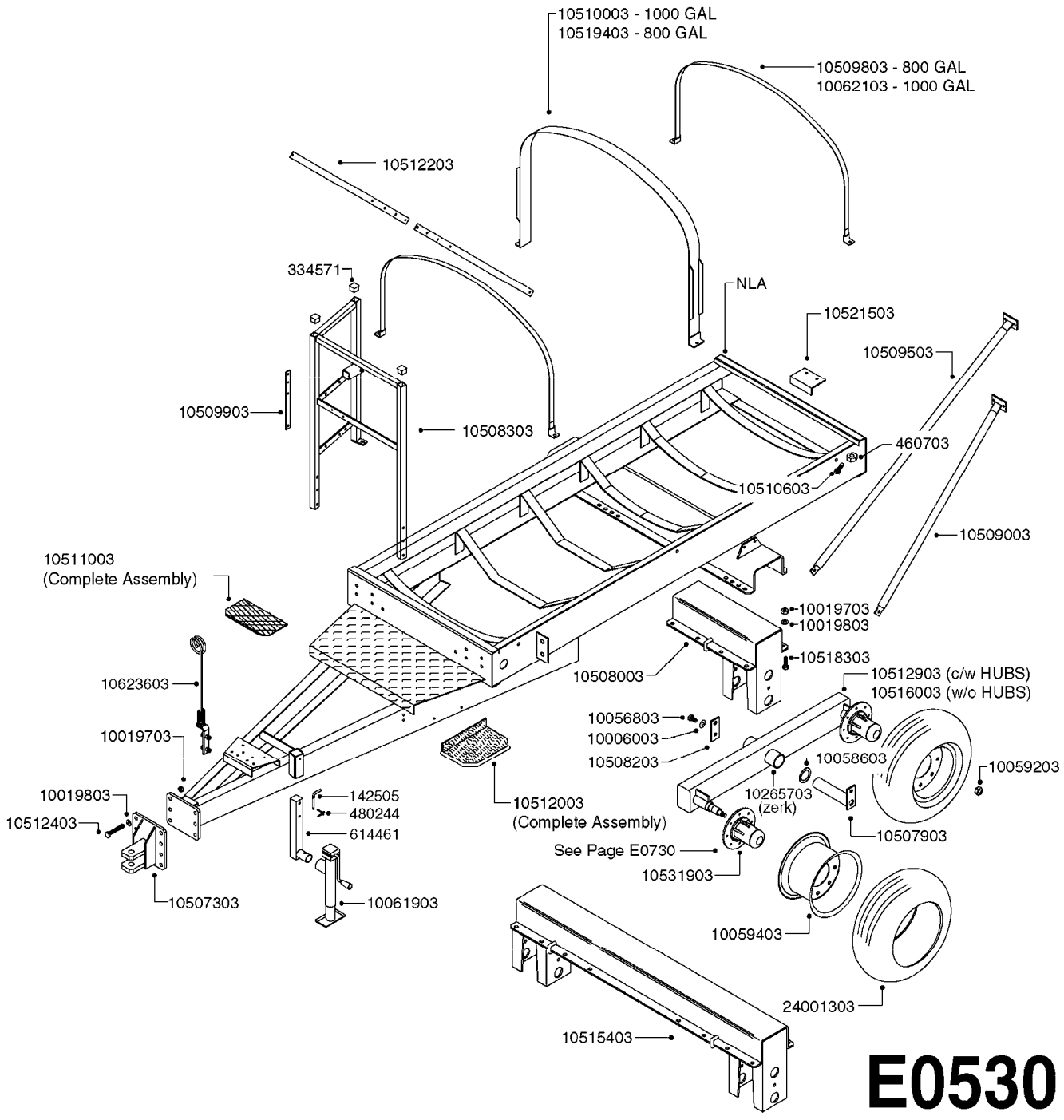

Agroparts: www.HARDI-INTERNATIONAL.com

FRAME - NAVIGATOR TA 800/1000
E0530-HIN, 01:01:16

Date 12.08.2020 11:39

parts-n°	order qty	description
142505	1	LOCKING PAWL 12 X 70MM
334571	1	PLUG 40x40x2 F.SQ.TUBE
460703	1	NUT HEX M12X1.75 LOCK DIN985A2 SS
480244	1	PIN SNAP D4.5
614461	1	JACK STAND ATTACHMENT
10006003	1	WASHER LOCK 5/8"
10019703	1	NUT HEX NC FHN 3/4-10 Z 5
10019803	1	WASHER LOCK L/W Z 3/4"
10056803	1	BOLT HEX 5/8 NC GR.5 01.50"
10058603	1	GARLOCK 2.5"DU 2.5" TA800/1000
10059203	1	BOLT WHEEL 9/16"x1-1/4"UNF 90D
10059403	1	RIM 15X10 X 8-8-6 +1.062OFFSET
10061903	1	JACK F300/500/575 5000LB
10062103	1	STRAP F. NAV M TNK 1000 110"LG
10265703	1	GREASE ZERK 5MM PRESS FIT
10507303	1	CLEVIS NAV.550/800/1000 GAL.
10507903	1	PIN F.PIVOT NAV800/1000
10508003	1	UPRIGHT W/M 800/1000 TANDEM
10508203	1	FLATBAR TANDEM NAV800/1000
10508303	1	HANDRAIL NAV 800/1000 GAL.
10509003	1	SIDE BRACE NAV8/1000 45-66'EAG
10509503	1	SIDE BRACE NAV8/1000 80-90'EAG
10509803	1	STRAP F.NAV TANK 800 GAL.
10509903	1	FLATBAR F.FILTER
10510003	1	STRAP F.TANK REINFOR.1000 NAV
10510603	1	BOLT F.ANCHOR STRAP
10511003	1	FRONT STEP ASSY.550/800/1000
10512003	1	SIDE STEP ASSY.550/800/1000
10512203	1	FLATBAR SIDE STRAP F.NAV8/1000
10512403	1	BOLT HEX 3/4 NC GR.8 02.25"
10512903	1	TANDEM BEAM ASSY.800/1000
10515403	1	AXLE W/M NAV.TA 800/1000 120"
10516003	1	TANDEM BEAM W/M NAV W/SPINDLE
10518303	1	BOLT HEX 2&3/4 NC GR.8 3.00"
10519403	1	STRAP F.TANK REINFOR.800 NAV
10521503	1	NAV TANK STOP BKT.KIT
10531903	1	HUB ASSY.COMP.F.2-1/8" SPINDLE
10623603	1	CABLE & HOSE HOLDER NAV.
24001303	1	TIRE 12.5L-15SL 12 PLY

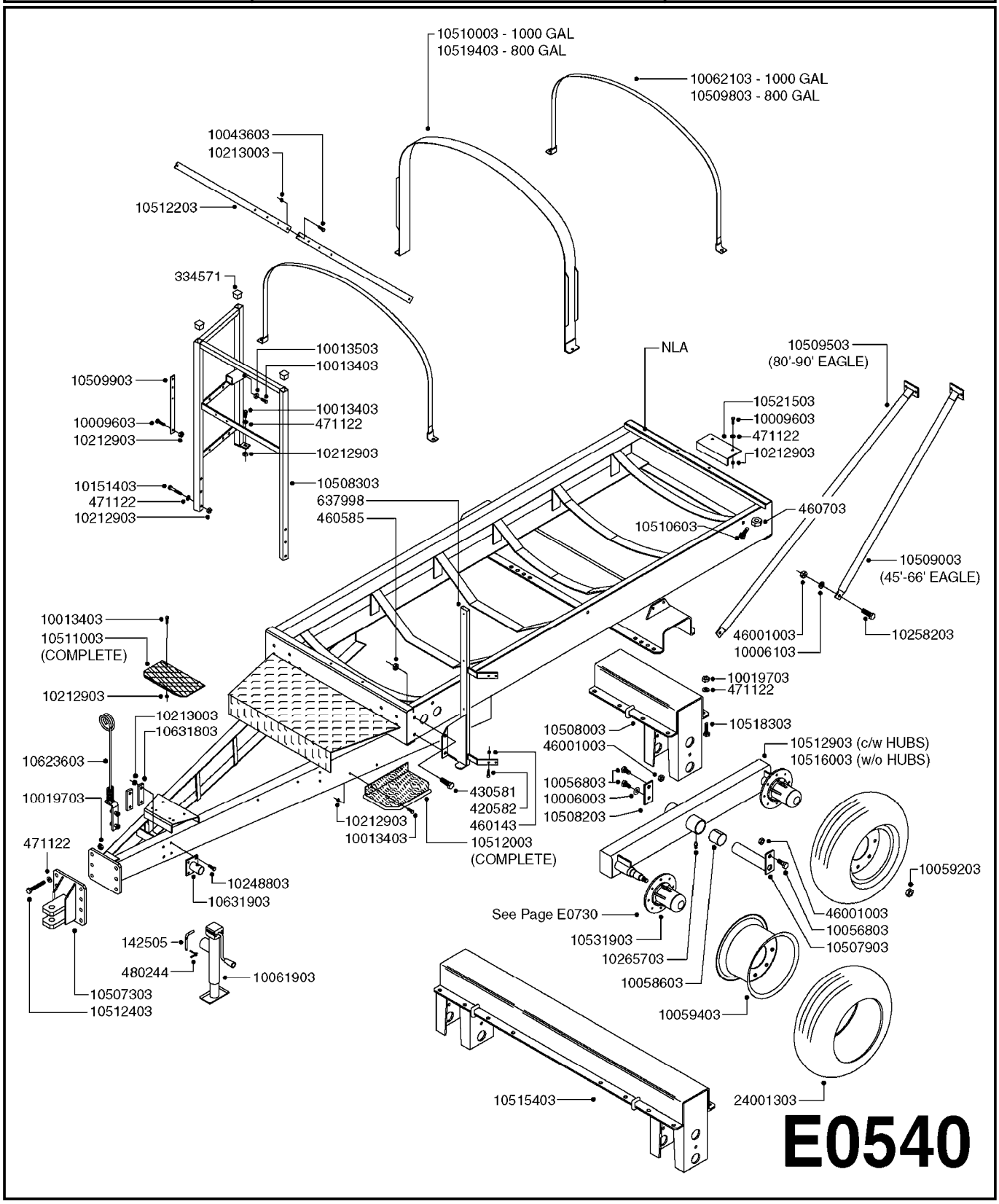
10510003 - 1000 GAL
10519403 - 800 GAL
10062103 - 1000 GAL
10509803 - 800 GAL
10043603
10213003
10512203
334571
10013503
10013403
10509903
10009603
10212903
10013403
471122
10212903
10151403
471122
10212903
10508303
637998
460585
NLA
10509503
(80'-90' EAGLE)
10521503
10009603
471122
10212903
460703
10510603
10509003
(45'-66' EAGLE)
46001003
10006103
10258203
10013403
10511003
(COMPLETE)
10212903
10213003
10631803
10623603
10019703
471122
10019703
471122
10518303
10508003
46001003
10512903 (c/w HUBS)
10516003 (w/o HUBS)
10056803
10006003
10508203
430581
420582
460143
10212903
10013403
10512003
(COMPLETE)
10248803
10631903
10059203
See Page E0730
46001003
10056803
10507903
10531903
10265703
10058603
142505
480244
10061903
10507303
10512403
10059403
10515403
24001303
E0540

Agroparts: www.HARDI-INTERNATIONAL.com

FRAME-NAV.M TA800/1000 PRE'05
E0540-HIN, 01:01:16

Date 12.08.2020 11:39

parts-n°	order qty	description
142505	1	LOCKING PAWL 12 X 70MM
334571	1	PLUG 40x40x2 F.SQ.TUBE
420582	1	BOLT HEX 8.8 DEL M8X20 FT A2
430581	1	BOLT HEX 8.8 DEL M16X40 FT
460143	1	LOCK NUT M8 SST A2 DIN985
460585	1	LOCKING NUT M16 DIN985 A2 SS
460703	1	NUT HEX M12X1.75 LOCK DIN985A2 SS
471122	1	WASHER, M10, Ø20/10.5X 2.0, SS
480244	1	PIN SNAP D4.5
637998	1	MANIFOLD BKT. NAVIGATOR
10006003	1	WASHER LOCK 5/8"
10006103	1	WASHER PLATE 5/8
10009603	1	BOLT HEX 3/8 NC GR.2 01.00"
10012903	1	PUMP HYPRO C9016 540 RPM 90023
10013403	1	BOLT HEX 3/8-16X1 1/4 HCS Z5
10013503	1	NUT HEX NC 3/8"
10019703	1	NUT HEX NC FHN 3/4-10 Z 5
10043603	1	BOLT HEX 7/16 NC GR.5 01.25"
10056803	1	BOLT HEX 5/8 NC GR.5 01.50"
10058603	1	GARLOCK 2.5"DU 2.5" TA800/1000
10059203	1	BOLT WHEEL 9/16"x1-1/4"UNF 90D
10059403	1	RIM 15X10 X 8-8-6 +1.062OFFSET
10061903	1	JACK F300/500/575 5000LB
10062103	1	STRAP F. NAV M TNK 1000 110"LG
10151403	1	BOLT HEX 3/8 NC GR.2 02.50"
10212903	1	NUT HEX NC (NYLON LOCK) 3/8"
10213003	1	NUT HEX NC (NYLON LOCK) 7/16"
10248803	1	BOLT HEX 7/16 NC GR.2 02.00"
10258203	1	BOLT HEX 5/8 NC GR.2 02.00"
10265703	1	GREASE ZERK 5MM PRESS FIT
10507303	1	CLEVIS NAV.550/800/1000 GAL.
10507903	1	PIN F.PIVOT NAV800/1000
10508003	1	UPRIGHT W/M 800/1000 TANDEM
10508203	1	FLATBAR TANDEM NAV800/1000
10508303	1	HANDRAIL NAV 800/1000 GAL.
10509003	1	SIDE BRACE NAV8/1000 45-66'EAG
10509503	1	SIDE BRACE NAV8/1000 80-90'EAG
10509803	1	STRAP F.NAV TANK 800 GAL.
10509903	1	FLATBAR F.FILTER
10510003	1	STRAP F.TANK REINFOR.1000 NAV
10510603	1	BOLT F.ANCHOR STRAP
10511003	1	FRONT STEP ASSY.550/800/1000
10512003	1	SIDE STEP ASSY.550/800/1000
10512203	1	FLATBAR SIDE STRAP F.NAV8/1000
10512403	1	BOLT HEX 3/4 NC GR.8 02.25"
10512903	1	TANDEM BEAM ASSY.800/1000
10515403	1	AXLE W/M NAV.TA 800/1000 120"
10516003	1	TANDEM BEAM W/M NAV W/SPINDLE
10518303	1	BOLT HEX 2&3/4 NC GR.8 3.00"
10519403	1	STRAP F.TANK REINFOR.800 NAV
10521503	1	NAV TANK STOP BKT.KIT
10531903	1	HUB ASSY.COMP.F.2-1/8" SPINDLE
10623603	1	CABLE & HOSE HOLDER NAV.
10631803	1	FLATBAR 1/4" x 110MM F.JACK
10631903	1	JACK MOUNT NAV550/1000 W/MOUNT
24001303	1	TIRE 12.5L-15SL 12 PLY
46001003	1	NUT HEX 5/8"-11 NYLOCK

HARDI	**Agroparts: www.HARDI-INTERNATIONAL.com**	
	FRAME-NAV.M TA800/1000 POST'05 E0550-HIN, 15:08:16	Page 0 Date 12.08.2020 11:39

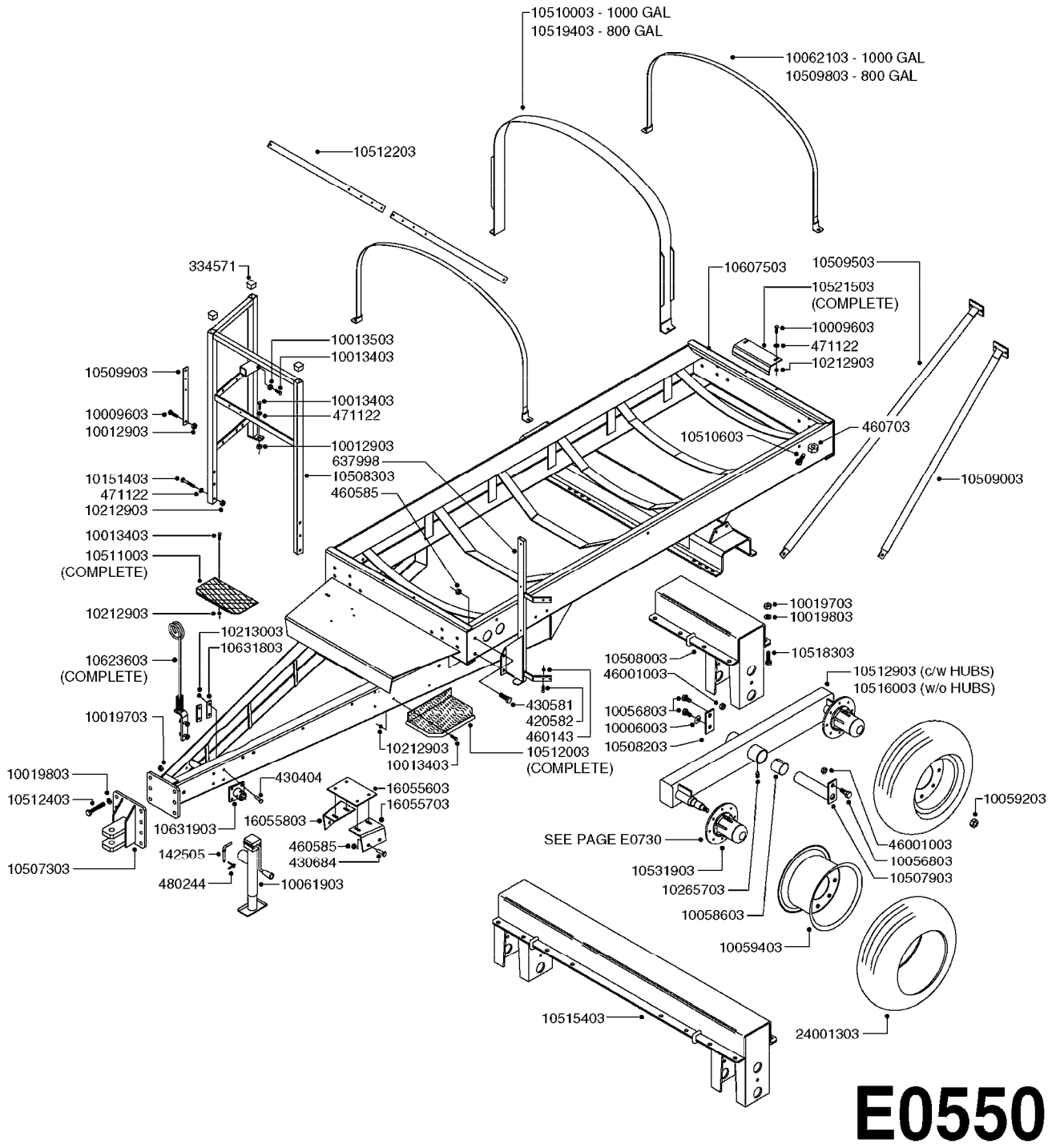

Agroparts: www.HARDI-INTERNATIONAL.com

FRAME-NAV.M TA800/1000 POST'05
E0550-HIN, 15:08:16

Date 12.08.2020 11:39

parts-n°	order qty	description
142505	1	LOCKING PAWL 12 X 70MM
334571	1	PLUG 40x40x2 F.SQ.TUBE
420582	1	BOLT HEX 8.8 DEL M8X20 FT A2
430404	1	BOLT HEX 8.8 DEL M12X50
430581	1	BOLT HEX 8.8 DEL M16X40 FT
430684	1	BOLT HEX 8.8 DEL M16X30 FT
460143	1	LOCK NUT M8 SST A2 DIN985
460585	1	LOCKING NUT M16 DIN985 A2 SS
460703	1	NUT HEX M12X1.75 LOCK DIN985A2 SS
471122	1	WASHER, M10, Ø20/10.5X 2.0, SS
480244	1	PIN SNAP D4.5
637998	1	MANIFOLD BKT. NAVIGATOR
10006003	1	WASHER LOCK 5/8"
10009603	1	BOLT HEX 3/8 NC GR.2 01.00"
10012903	1	PUMP HYPRO C9016 540 RPM 90023
10013403	1	BOLT HEX 3/8-16X1 1/4 HCS Z5
10013503	1	NUT HEX NC 3/8"
10019703	1	NUT HEX NC FHN 3/4-10 Z 5
10019803	1	WASHER LOCK L/W Z 3/4"
10056803	1	BOLT HEX 5/8 NC GR.5 01.50"
10058603	1	GARLOCK 2.5"DU 2.5" TA800/1000
10059203	1	BOLT WHEEL 9/16"x1-1/4"UNF 90D
10059403	1	RIM 15X10 X 8-8-6 +1.062OFFSET
10061903	1	JACK F300/500/575 5000LB
10062103	1	STRAP F. NAV M TNK 1000 110"LG
10151403	1	BOLT HEX 3/8 NC GR.2 02.50"
10212903	1	NUT HEX NC (NYLON LOCK) 3/8"
10213003	1	NUT HEX NC (NYLON LOCK) 7/16"
10265703	1	GREASE ZERK 5MM PRESS FIT
10507303	1	CLEVIS NAV.550/800/1000 GAL.
10507903	1	PIN F.PIVOT NAV800/1000
10508003	1	UPRIGHT W/M 800/1000 TANDEM
10508203	1	FLATBAR TANDEM NAV800/1000
10508303	1	HANDRAIL NAV 800/1000 GAL.
10509003	1	SIDE BRACE NAV8/1000 45-66'EAG
10509503	1	SIDE BRACE NAV8/1000 80-90'EAG
10509803	1	STRAP F.NAV TANK 800 GAL.
10509903	1	FLATBAR F.FILTER
10510003	1	STRAP F.TANK REINFOR.1000 NAV
10510603	1	BOLT F.ANCHOR STRAP
10511003	1	FRONT STEP ASSY.550/800/1000
10512003	1	SIDE STEP ASSY.550/800/1000
10512203	1	FLATBAR SIDE STRAP F.NAV8/1000
10512403	1	BOLT HEX 3/4 NC GR.8 02.25"
10512903	1	TANDEM BEAM ASSY.800/1000
10515403	1	AXLE W/M NAV.TA 800/1000 120"
10516003	1	TANDEM BEAM W/M NAV W/SPINDLE
10518303	1	BOLT HEX 2&3/4 NC GR.8 3.00"
10519403	1	STRAP F.TANK REINFOR.800 NAV
10521503	1	NAV TANK STOP BKT.KIT
10531903	1	HUB ASSY.COMP.F.2-1/8" SPINDLE
10607503	1	FRAME NAVIGATOR 800/1000-98
10623603	1	CABLE & HOSE HOLDER NAV.
10631803	1	FLATBAR 1/4" x 110MM F.JACK
10631903	1	JACK MOUNT NAV550/1000 W/MOUNT
16055603	1	PUMP MT. PLATE DIA. NAV. M
16055703	1	PUMP MT. PLATE L.H. DIA. NAV.M
16055803	1	PUMP MT. PLATE R.H. DIA. NAV.M
24001303	1	TIRE 12.5L-15SL 12 PLY
46001003	1	NUT HEX 5/8"-11 NYLOCK

TANK - 575/1100 NEW NAV ECP
E0560-HIN, 23:08:18

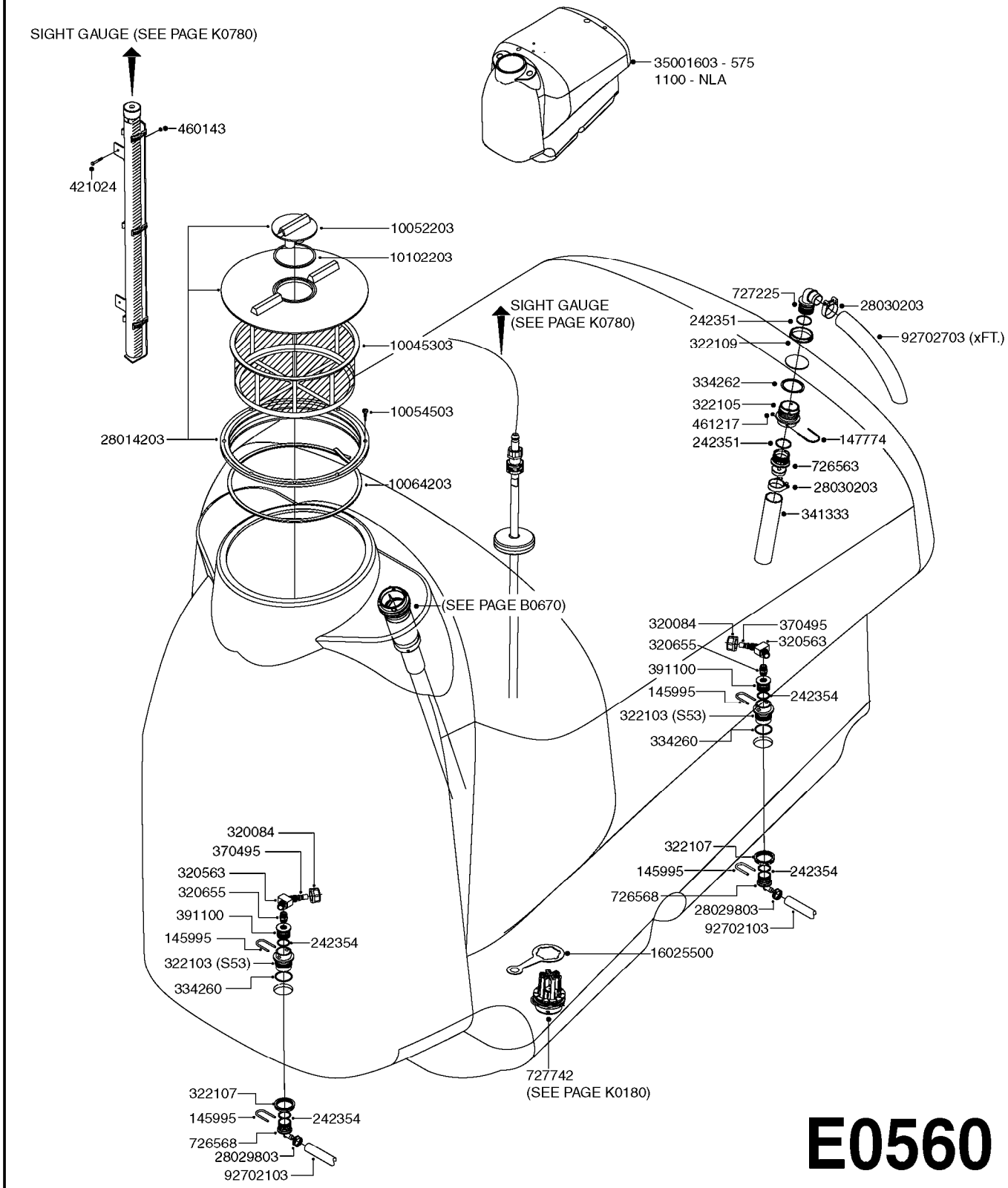

E0560

Agroparts: www.HARDI-INTERNATIONAL.com

TANK - 575/1100 NEW NAV ECP
E0560-HIN, 23:08:18

Date 12.08.2020 11:39

parts-n°	order qty	description
145995	1	FITT.DK S-53 FORK
147774	1	FITT.DK S-93 FORK W. M5 THREAD
242351	1	O-RING D69.5X3.0 VITON F.S-93
242354	1	O-RING D32.2X3.0 VITON
320084	1	FITT.DK NUT 1/2" BSP
320563	1	FITT.DK 3 WAY 1/2" 110 DEG.
320655	1	FITT.DK HN 1/2"-1/2" BSP
322103	1	FITT.DK S-53 BULKHEAD
322105	1	FITT.DK S-93 BULKHEAD DOUBLE
322107	1	FITT.DK S-53 BULKHEAD NUT
322109	1	FITT.DK S-93 BULKHEAD NUT
334260	1	GASKET F. S-53 BULKHEAD
334262	1	GASKET F.S-93 BULKHEAD
341333	1	TUBE Ø57/Ø52 L=1500 BLACK PE
370495	1	NOZZLE INJECTOR 5066-3.0
391100	1	FITT.DK S-53THREAD INS.1/2"BSP
421024	1	BOLT HEX 8.8 DEL M8X60
460143	1	LOCK NUT M8 SST A2 DIN985
461217	1	NUT HEX M5 LOCK
726563	1	FITT.DK S-93 STR 2" W/O-RING
726568	1	FITT.DK.S-53 HB 1/2"90 W/O-RING
727225	1	FITT.DK S-93 ELB.2'PVC W/ORING
727742	1	TOP DRAIN CORD TYPE
10045303	1	FILTER BASKET 16"
10052203	1	LID VENT ASSY
10054503	1	SCREW 3/4" SELF TAPPING
10064203	1	SET SEALING SPONGE 1 Ft BULK
10102203	1	GASKET F.16" LID BREATHER
16025500	1	TANK SPACER SIGHT GAUGE
28014203	1	LID ASSY. (3-PC.) 16" ARAG
28029803	1	CLAMP HOSE GEAR P1/2" 6708
28030203	1	CLAMP HOSE T-BOLT S2" 235-67
35001603	1	TANK RAW 575 GAL. NAV.
92702103	1	HOSE R X1/2" X300PSI WP X0012"
92702703	1	HOSE PVC SUCT GRAY 2"

TANK - 575/1100 NEW NAV ECPC
E0570-HIN, 23:08:18

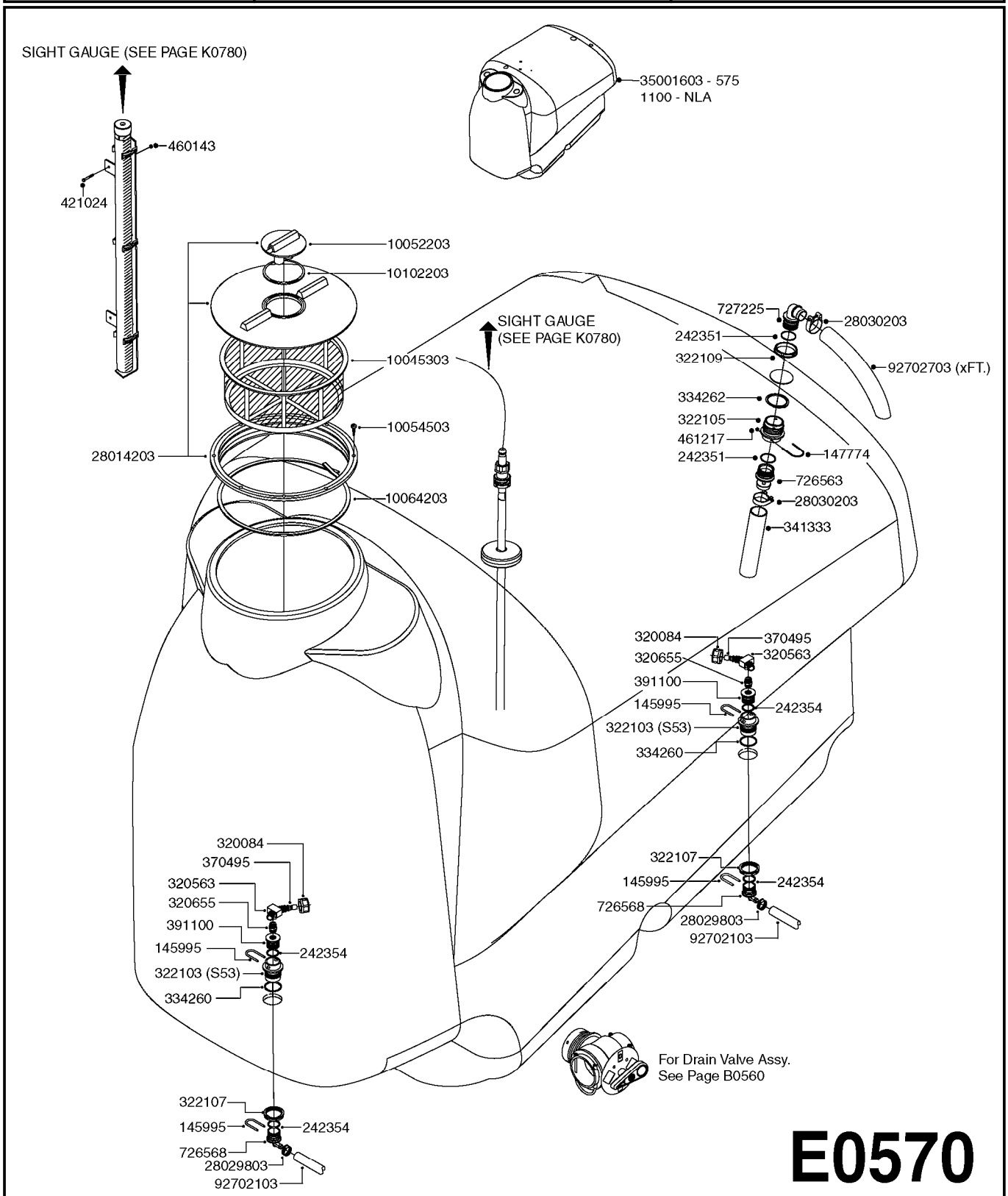

E0570

Agroparts: www.HARDI-INTERNATIONAL.com

TANK - 575/1100 NEW NAV ECPC
E0570-HIN, 23:08:18

Date 12.08.2020 11:39

parts-n°	order qty	description
145995	1	FITT.DK S-53 FORK
147774	1	FITT.DK S-93 FORK W. M5 THREAD
242351	1	O-RING D69.5X3.0 VITON F.S-93
242354	1	O-RING D32.2X3.0 VITON
320084	1	FITT.DK NUT 1/2" BSP
320563	1	FITT.DK 3 WAY 1/2" 110 DEG.
320655	1	FITT.DK HN 1/2"-1/2" BSP
322103	1	FITT.DK S-53 BULKHEAD
322105	1	FITT.DK S-93 BULKHEAD DOUBLE
322107	1	FITT.DK S-53 BULKHEAD NUT
322109	1	FITT.DK S-93 BULKHEAD NUT
334260	1	GASKET F. S-53 BULKHEAD
334262	1	GASKET F.S-93 BULKHEAD
341333	1	TUBE Ø57/Ø52 L=1500 BLACK PE
370495	1	NOZZLE INJECTOR 5066-3.0
391100	1	FITT.DK S-53THREAD INS.1/2"BSP
421024	1	BOLT HEX 8.8 DEL M8X60
460143	1	LOCK NUT M8 SST A2 DIN985
461217	1	NUT HEX M5 LOCK
726563	1	FITT.DK S-93 STR 2" W/O-RING
726568	1	FITT.DK.S-53 HB 1/2"90 W/O-RING
727225	1	FITT.DK S-93 ELB.2'PVC W/ORING
10045303	1	FILTER BASKET 16"
10052203	1	LID VENT ASSY
10054503	1	SCREW 3/4" SELF TAPPING
10064203	1	SET SEALING SPONGE 1 Ft BULK
10102203	1	GASKET F.16" LID BREATHER
28014203	1	LID ASSY. (3-PC.) 16" ARAG
28029803	1	CLAMP HOSE GEAR P1/2" 6708
28030203	1	CLAMP HOSE T-BOLT S2" 235-67
35001603	1	TANK RAW 575 GAL. NAV.
92702103	1	HOSE R X1/2" X300PSI WP X0012"
92702703	1	HOSE PVC SUCT GRAY 2"

FRAME "NEW" NAV 575
E0580-HIN, 01:01:16

Date 12.08.2020 11:39

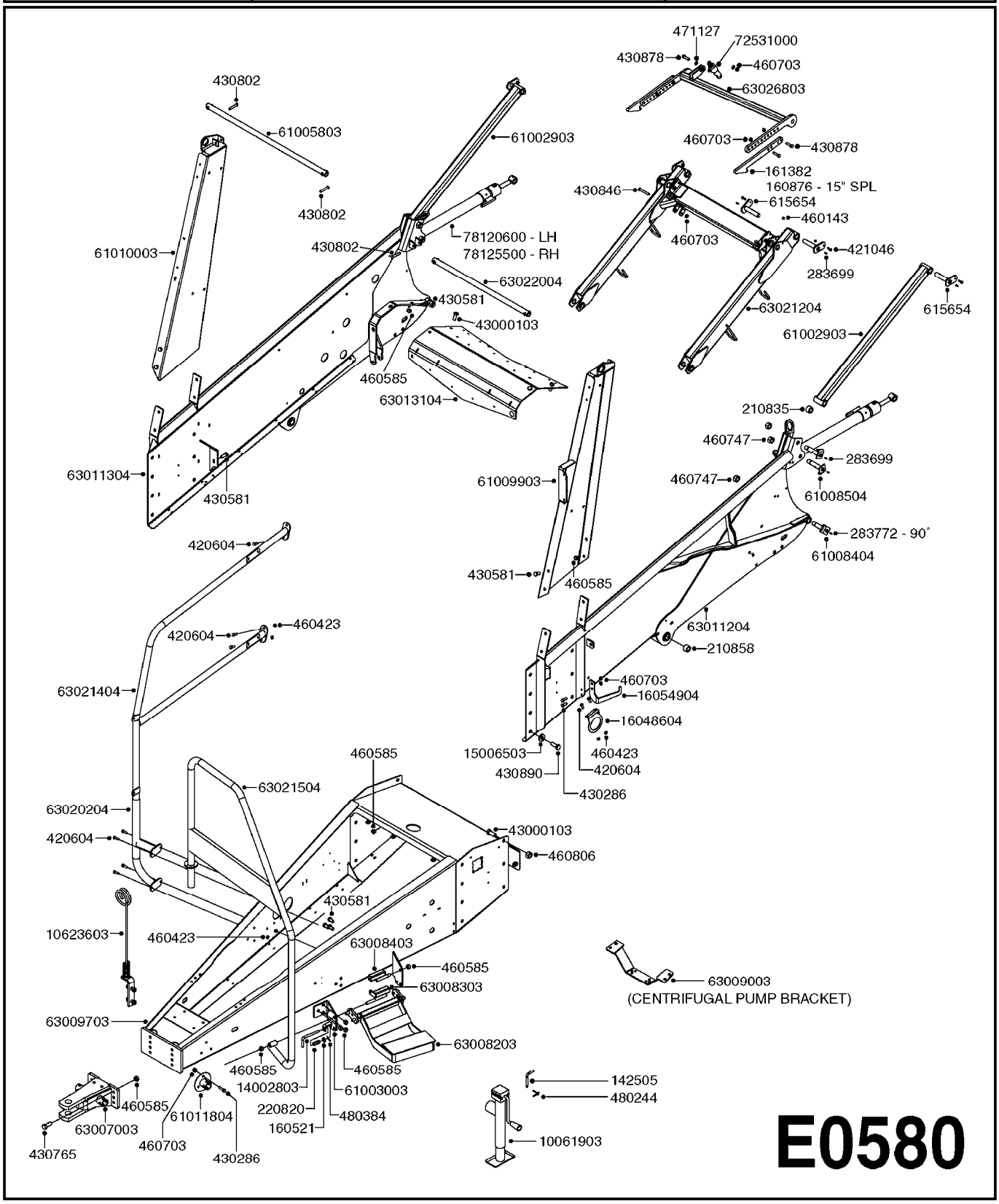

Agroparts: www.HARDI-INTERNATIONAL.com

FRAME "NEW" NAV 575
E0580-HIN, 01:01:16

Date 12.08.2020 11:39

parts-n°	order qty	description
142505	1	LOCKING PAWL 12 X 70MM
160521	1	WASHER D30.5/D13X2
160876	1	HOOK F.TRANSPORT LOCK L=280MM
161382	1	HOOK F.TRANSPORT LOCK L=340MM
210835	1	BUSHING D28/25 L=25
210858	1	BUSHING 034/30 L=20
220820	1	SPRING D20.5/2.0 0-50MM
283699	1	GREASE NIPPLE M6X1
283772	1	GREASE NIPPLE M6X1 90°
420604	1	BOLT HEX 8.8 DEL M10X25 FT DIN933
421046	1	BOLT HEX M8X25/25 A2 SS DIN933
430286	1	BOLT HEX 8.8 DEL M12X30 FT
430581	1	BOLT HEX 8.8 DEL M16X40 FT
430765	1	BOLT HEX 8.8 DEL M16X55
430802	1	BOLT HEX 8.8 DEL M12X75
430846	1	BOLT HEX 8.8 DEL M12X80
430878	1	BOLT HEX 8.8 DEL M12X45 DIN931
430890	1	BOLT HEX 8.8 DEL M20X50
460143	1	LOCK NUT M8 SST A2 DIN985
460423	1	NUT HEX M10X1.50 LOCK DIN985A2 SS
460585	1	LOCKING NUT M16 DIN985 A2 SS
460703	1	NUT HEX M12X1.75 LOCK DIN985A2 SS
460747	1	NUT HEX M24 LOCK
460806	1	NUT HEX M20X2.50 LOCK DIN985A2 SS
471127	1	WASHER, M12, Ø24/13X24X2.5 SS
480244	1	PIN SNAP D4.5
480384	1	PIN COTTER 3/16 x 1-1/2"
615654	1	PIN D25 X 123 F. PARALIFT
10061903	1	JACK F300/500/575 5000LB
10623603	1	CABLE & HOSE HOLDER NAV.
14002803	1	PIN 1/2"Ø NAV STEP
15006503	1	WASHER FRAME BUSHING
16048604	1	QUICK FILL BKT. NAV. 575-1100
16054904	1	JACKSTAND SUPPORT 575 NAV.
43000103	1	BOLT HEX 8.8 CRG M16x2.0 40LG
61002903	1	LINK ARM F. PARALIFT NAV.
61003003	1	BRACKET FLSH TK +STEP 575 FNT
61005803	1	CROSSBAR FRONT NEW NAV
61008404	1	MOUNTING BOLT Ø25X90/M24
61008504	1	MOUNTING BOLT Ø25X98/M24
61009903	1	UPRIGHT PANEL LH 575 NAV.
61010003	1	UPRIGHT PANEL RH 575 NAV.
61011804	1	JACK STAND MT. NAV. 575
63007003	1	CLEVIS HITCH NAV. 1100
63008203	1	STEP F. PLATFORM 575-1100 NAV.
63008303	1	FLUSH TANK PIVOT FRONT NAV.
63008403	1	FLUSH TANK PIVOT REAR NAV.
63009003	1	CENTRIFUGAL PUMP BRACKET
63009703	1	DRAWBAR FRAME 575 NAVIGATOR
63011204	1	CHASSIS PANEL LH 575 NAVIGATOR
63011304	1	CHASSIS PANEL RH 575 NAVIGATOR
63013104	1	CROSS MEMBER REAR NAVIGATOR
63020204	1	BRACKET HANDRAIL MOUNT
63021204	1	PARALIFT WELDMENT NAV
63021404	1	HANDRAIL SIDE 575 NAV
63021504	1	HANDRAIL FRT 575 NAV
63022004	1	CROSSBAR REAR NAVIGATOR
63026803	1	TRANS. STOP BKT. PARALIFT NEW
72531000	1	CYL. D25/12-50/78124200 W/FITT
78120600	1	CYLINDER 60/25 X 662 NAV PAR L
78125500	1	CYLINDER 60/25 X 662 NAV PAR R

FIXED AXLE "NEW" NAV 575
E0590-HIN, 01:01:16

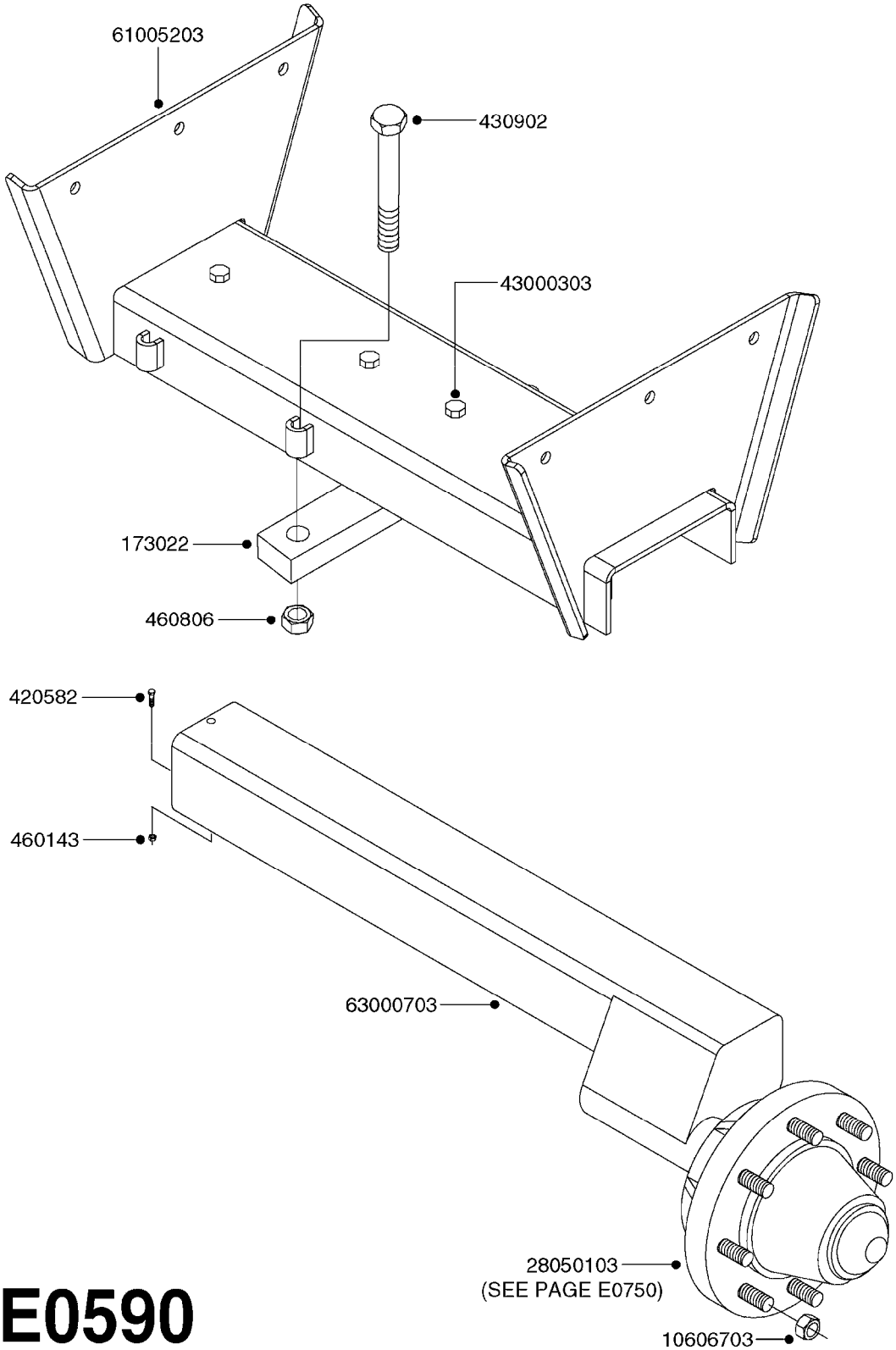

E0590

Agroparts: www.HARDI-INTERNATIONAL.com

FIXED AXLE "NEW" NAV 575
E0590-HIN, 01:01:16

Date 12.08.2020 11:39

parts-n°	order qty	description
173022	1	FLATBAR 50X30 L=218/2XD22
420582	1	BOLT HEX 8.8 DEL M8X20 FT A2
430902	1	BOLT HEX 8.8 M20X150
460143	1	LOCK NUT M8 SST A2 DIN985
460806	1	NUT HEX M20X2.50 LOCK DIN985A2 SS
10606703	1	NUT HEX NF 5/8" FLANGED F.STUD
28050103	1	HUB F 3" 758 7500# PACKAGE
43000303	1	BOLT HEX 8.8 M20X200 BLACK
61005203	1	* AXLE NON-SUSP ADJ 575
63000703	1	AXLE INSERT W/M CM750

FRAME - NEW NAVIGATOR 1100
E0600-HIN, 01:01:16

Date 12.08.2020 11:39

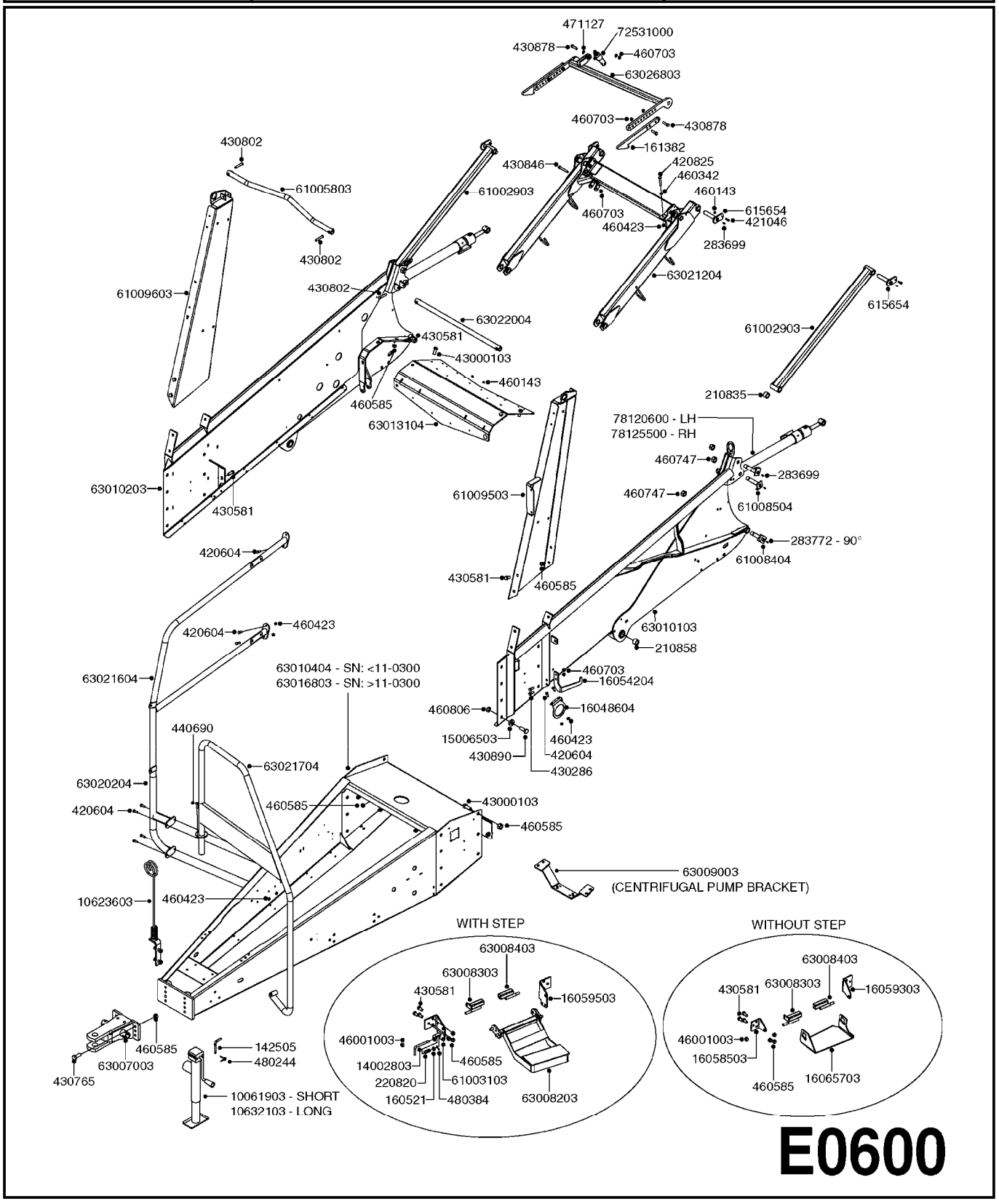

E0600

Agroparts: www.HARDI-INTERNATIONAL.com

FRAME - NEW NAVIGATOR 1100
E0600-HIN, 01:01:16

Date 12.08.2020 11:39

parts-n°	order qty	description
142505	1	LOCKING PAWL 12 X 70MM
160521	1	WASHER D30.5/D13X2
161382	1	HOOK F.TRANSPORT LOCK L=340MM
210835	1	BUSHING D28/25 L=25
210858	1	BUSHING 034/30 L=20
220820	1	SPRING D20.5/2.0 0-50MM
283699	1	GREASE NIPPLE M6X1
283772	1	GREASE NIPPLE M6X1 90°
420604	1	BOLT HEX 8.8 DEL M10X25 FT DIN933
420825	1	BOLT HEX 8.8 DEL M10X65
421046	1	BOLT HEX M8X25/25 A2 SS DIN933
430286	1	BOLT HEX 8.8 DEL M12X30 FT
430581	1	BOLT HEX 8.8 DEL M16X40 FT
430765	1	BOLT HEX 8.8 DEL M16X55
430802	1	BOLT HEX 8.8 DEL M12X75
430846	1	BOLT HEX 8.8 DEL M12X80
430878	1	BOLT HEX 8.8 DEL M12X45 DIN931
430890	1	BOLT HEX 8.8 DEL M20X50
440690	1	PT SCREW KB 6MM X 35 ELZ
460143	1	LOCK NUT M8 SST A2 DIN985
460342	1	NUT HEX M10 DEL DIN934
460423	1	NUT HEX M10X1.50 LOCK DIN985A2 SS
460585	1	LOCKING NUT M16 DIN985 A2 SS
460703	1	NUT HEX M12X1.75 LOCK DIN985A2 SS
460747	1	NUT HEX M24 LOCK
460806	1	NUT HEX M20X2.50 LOCK DIN985A2 SS
471127	1	WASHER, M12, Ø24/13X24X2.5 SS
480244	1	PIN SNAP D4.5
480384	1	PIN COTTER 3/16 x 1-1/2"
615654	1	PIN D25 X 123 F. PARALIFT
10061903	1	JACK F300/500/575 5000LB
10623603	1	CABLE & HOSE HOLDER NAV.
10632103	1	JACK F RANGER 5000LB
14002803	1	PIN 1/2"Ø NAV STEP
15006503	1	WASHER FRAME BUSHING
16048604	1	QUICK FILL BKT. NAV. 575-1100
16054204	1	JACKSTAND SUPPORT NAV. 1100
16058503	1	BRACKET FLSH TK FRT 1100 NAV
16059303	1	BRACKET FLSH TK BACK 1100 NAV
16059503	1	BRACKET FLSH TK +STEP 1100 BK
16065703	1	PLATE TANK PIVOT STOP NEW NAV
43000103	1	BOLT HEX 8.8 CRG M16x2.0 40LG
46001003	1	NUT HEX 5/8"-11 NYLOCK
61002903	1	LINK ARM F. PARALIFT NAV.
61003103	1	BRACKET FLSH TK +STEP 1100 FNT
61005803	1	CROSSBAR FRONT NEW NAV
61008404	1	MOUNTING BOLT Ø25X90/M24
61008504	1	MOUNTING BOLT Ø25X98/M24
61009503	1	UPRIGHT PANEL LH 1100 NAV.
61009603	1	UPRIGHT PANEL RH 1100 NAV.
63007003	1	CLEVIS HITCH NAV. 1100
63008203	1	STEP F. PLATFORM 575-1100 NAV.
63008303	1	FLUSH TANK PIVOT FRONT NAV.
63008403	1	FLUSH TANK PIVOT REAR NAV.
63009003	1	CENTRIFUGAL PUMP BRACKET
63010103	1	CHASSIS PANEL LH 1100 NAVIGATO
63010203	1	CHASSIS PANEL RH 1100 NAVIGATO
63010404	1	DRAWBAR FRAME 1100 NAVIGATOR
63013104	1	CROSS MEMBER REAR NAVIGATOR
63016803	1	DRAWBAR FRAME 1100 NAVIGATOR
63020204	1	BRACKET HANDRAIL MOUNT

FRAME - NEW NAVIGATOR 1100
E0600-HIN, 01:01:16

Date 12.08.2020 11:39

parts-n°	order qty	description
63021204	1	PARALIFT WELDMENT NAV
63021604	1	HANDRAIL SIDE 1100 NAV
63021704	1	HANDRAIL FRT 1100 NAV
63022004	1	CROSSBAR REAR NAVIGATOR
63026803	1	TRANS. STOP BKT. PARALIFT NEW
72531000	1	CYL. D25/12-50/78124200 W/FITT
78120600	1	CYLINDER 60/25 X 662 NAV PAR L
78125500	1	CYLINDER 60/25 X 662 NAV PAR R

"NEW" NAVIGATOR SUSPENDED AXLE
E0610-HIN, 01:01:16

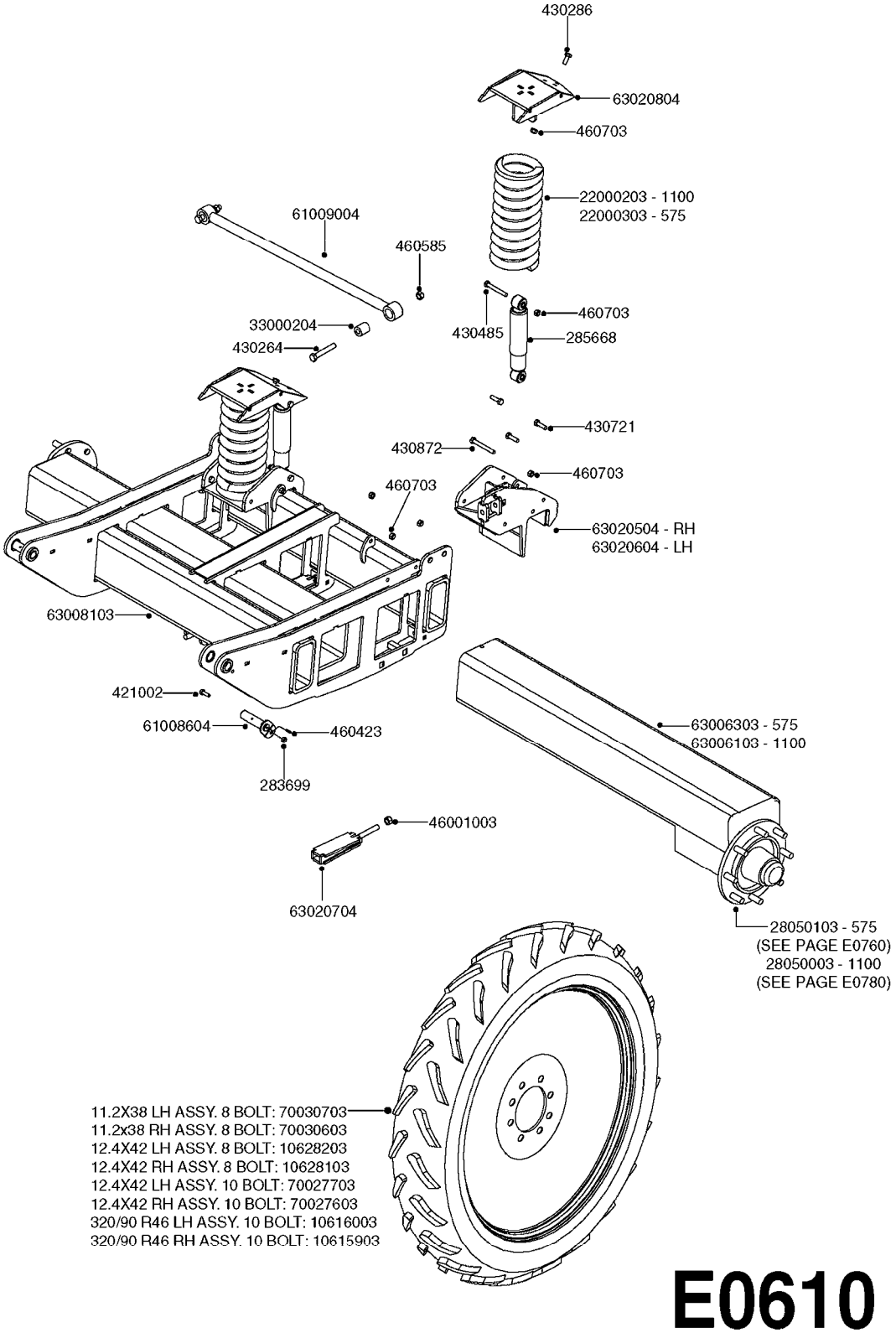

E0610

Agroparts: www.HARDI-INTERNATIONAL.com

"NEW" NAVIGATOR SUSPENDED AXLE
E0610-HIN, 01:01:16

Date 12.08.2020 11:39

parts-n°	order qty	description
283699	1	GREASE NIPPLE M6X1
285668	1	SHOCK ABSORBER L=300/465
421002	1	BOLT HEX 8.8 DEL M10X30 FT DIN933
430264	1	BOLT HEX 8.8 DEL M16X100
430286	1	BOLT HEX 8.8 DEL M12X30 FT
430485	1	BOLT HEX 8.8 DEL M12X90
430721	1	BOLT HEX 8.8 DEL M12X40 FT
430872	1	BOLT HEX 8.8 DEL M12X100 FT
460423	1	NUT HEX M10X1.50 LOCK DIN985A2 SS
460585	1	LOCKING NUT M16 DIN985 A2 SS
460703	1	NUT HEX M12X1.75 LOCK DIN985A2 SS
10615903	1	TIRE ASSY 2-3/16 OFFSET RH
10616003	1	TIRE ASSY 2-3/16 OFFSET LH
10628103	1	TIRE ASSY 12.4X42 10PLY 8BLTL
10628203	1	TIRE ASSY 12.4X42 10PLY 8BLTR
22000203	1	SPRING 1100 NAV. SUSPENSION
22000303	1	SPRING 575 NAV. SUSPENSION
28050003	1	HUB F 3.5" 873 15000# PACKAGE
28050103	1	HUB F 3" 758 7500# PACKAGE
33000204	1	BUSHING F. SUS. SWAY BAR NAV.
46001003	1	NUT HEX 5/8"-11 NYLOCK
61008604	1	BEARING BOLT D30X108
61009004	1	SWAYBAR F.SUS. 575-1100 NAV.
63006103	1	AXLE INSERT W/M NAV. 1100
63006303	1	AXLE INSERT W/M SUS. 575 NAV
63008103	1	AXLE SWING ARM 1100 NAV.
63020504	1	SPRING MT. BOTTOM RH 1100 NAV.
63020604	1	SPRING MT. BOTTOM LH 1100 NAV.
63020704	1	AXLE INSERT WEDGE NAV.
63020804	1	SPRING MOUNT TOP RH NAV.
70027603	1	TIRE ASSY 12.4X42 10PLY 10B RH
70027703	1	TIRE ASSY 12.4X42 10PLY 10B LH
70030603	1	TIRE ASSY 11.2-38 RH
70030703	1	TIRE ASSY 11.2-38 LH

TANK-HC 950M/950 TWIN(POST 95)
E0620-HIN, 01:01:16

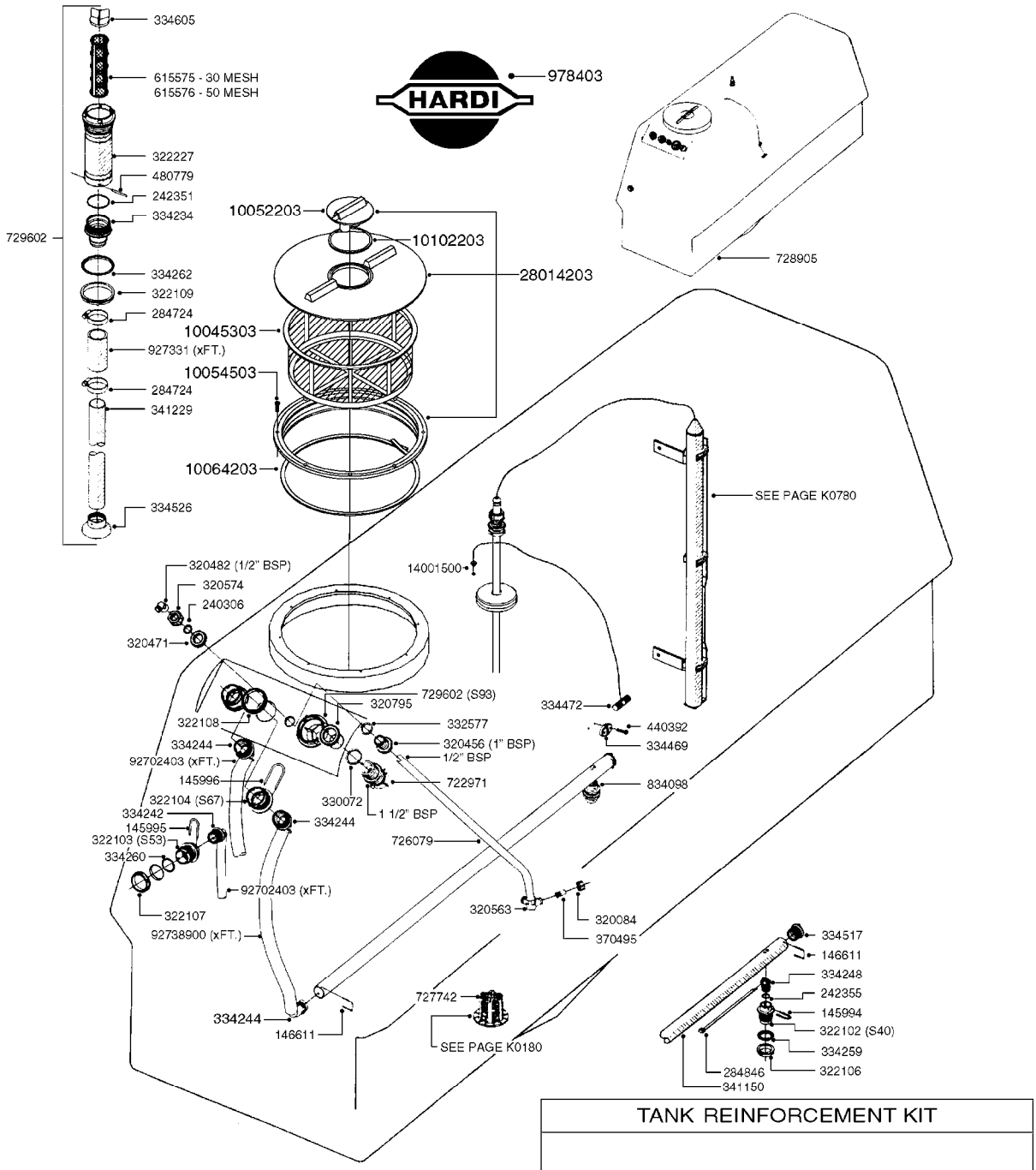

FOR CONNECTING HOSE FITTINGS, SEE SECTION L

TANK REINFORCEMENT KIT

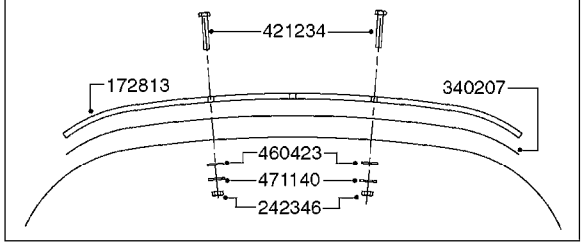

E0620

Agroparts: www.HARDI-INTERNATIONAL.com

TANK-HC 950M/950 TWIN(POST 95)
E0620-HIN, 01:01:16

Date 12.08.2020 11:39

parts-n°	order qty	description
145994	1	FITT.DK S-40 FORK
145995	1	FITT.DK S-53 FORK
145996	1	FITT.DK S-67 FORK
146611	1	CLAMP D3/32-37MM
172813	1	STRAP REINFORCEMENT F.950
240306	1	O-RING D29/D21X4
242346	1	SEAL D30/10X3
242351	1	O-RING D69.5X3.0 VITON F.S-93
242355	1	O-RING D19.2X3.0 VITON F.S-40
284724	1	CLAMP HOSE GEAR D52-70
284846	1	CABLE TIE 8 X 27
320084	1	FITT.DK NUT 1/2" BSP
320456	1	FITT.DK BULKHEAD 1"BSP DOUBLE
320471	1	FITT.DK NUT 1" BSP JAMB
320482	1	FITT.DK ELB. 1/2" BSP 60 DEG.
320563	1	FITT.DK 3 WAY 1/2" 110 DEG.
320574	1	FITT.DK NUT 1" BSP SPECIAL
320795	1	FITT.DK NUT 1-1/2" BSP JAMB
322102	1	FITT.DK S-40 BULKHEAD
322103	1	FITT.DK S-53 BULKHEAD
322104	1	FITT.DK S-67 BULKHEAD
322106	1	FITT.DK S-40 BULKHEAD NUT
322107	1	FITT.DK S-53 BULKHEAD NUT
322108	1	FITT.DK S-67 BULKHEAD NUT
322109	1	FITT.DK S-93 BULKHEAD NUT
322227	1	HOUSING F.FILTER S-93 2"
330072	1	O-RING D53.5/D45.5X4
332577	1	O-RING D38/D30X4 F.1" PUR.
334234	1	FITT.DK S-93 STR.2" RUBBER
334242	1	FITT.DK S-53 ELB.1"
334244	1	FITT.DK S-67 ELB.1-1/4"
334248	1	FITT.DK S-40 PLUG
334259	1	GASKET F. S-40 BULKHEAD
334260	1	GASKET F. S-53 BULKHEAD
334262	1	GASKET F.S-93 BULKHEAD
334469	1	CLEVIS F.CORD TOP DRAIN ASSY.
334472	1	HANDLE FOR TOP DRAIN
334517	1	END CAP F. SPARGER TUBE
334526	1	FOOT F.SUCTION TUBE 2"
334605	1	VANE F.TOP SUCTION FILTER
340207	1	TANK STRAP PACKING 40X800
341150	1	SPARGE TUBE HC650
341229	1	TUBE, SUCTION-2",L=1600MM
370495	1	NOZZLE INJECTOR 5066-3.0
421234	1	SCREW HM10-50/50 STAINLESS
440392	1	SCREW 6.3 X 25.0 DIN7981C TORX
460423	1	NUT HEX M10X1.50 LOCK DIN985A2 SS
471140	1	WASHER D30/D10.5X2.5 STAINLESS
480779	1	PIN D5X55 SPLIT
615575	1	FILTER F.TOP SUCT.30 MESH GRN.
615576	1	FILTER F.TOP SUCT.50 MESH BLUE
722971	1	SAFETY VALVE SCF 217PSI(15BAR)
726079	1	AGITATION TUBE ASSY. HC950
727742	1	TOP DRAIN CORD TYPE
728905	1	TANK/FRAME TY/TZ/TA 3500
729602	1	TOP SUCTION KIT NAV 2"
834098	1	SPARGE TUBE ASSY CPL HC/TA650M
927331	1	HOSE R X 28 BAR X 50MM X 0012"
978403	1	DECAL COMPANY 280 X 450
10045303	1	FILTER BASKET 16"
10052203	1	LID VENT ASSY

parts-n°	order qty	description
10054503	1	SCREW 3/4" SELF TAPPING
10064203	1	SET SEALING SPONGE 1 Ft BULK
10102203	1	GASKET F.16" LID BREATHER
14001500	1	GROMMET F.TOP DRAIN CORD
28014203	1	LID ASSY. (3-PC.) 16" ARAG
92702403	1	HOSE PVC SUCT GRAY 1"
92738900	1	HOSE R X PVC X 1-1/4" 0012"

FRAME - HC 950M/TWIN 950
E0630-HIN, 01:01:16

Date 12.08.2020 11:39

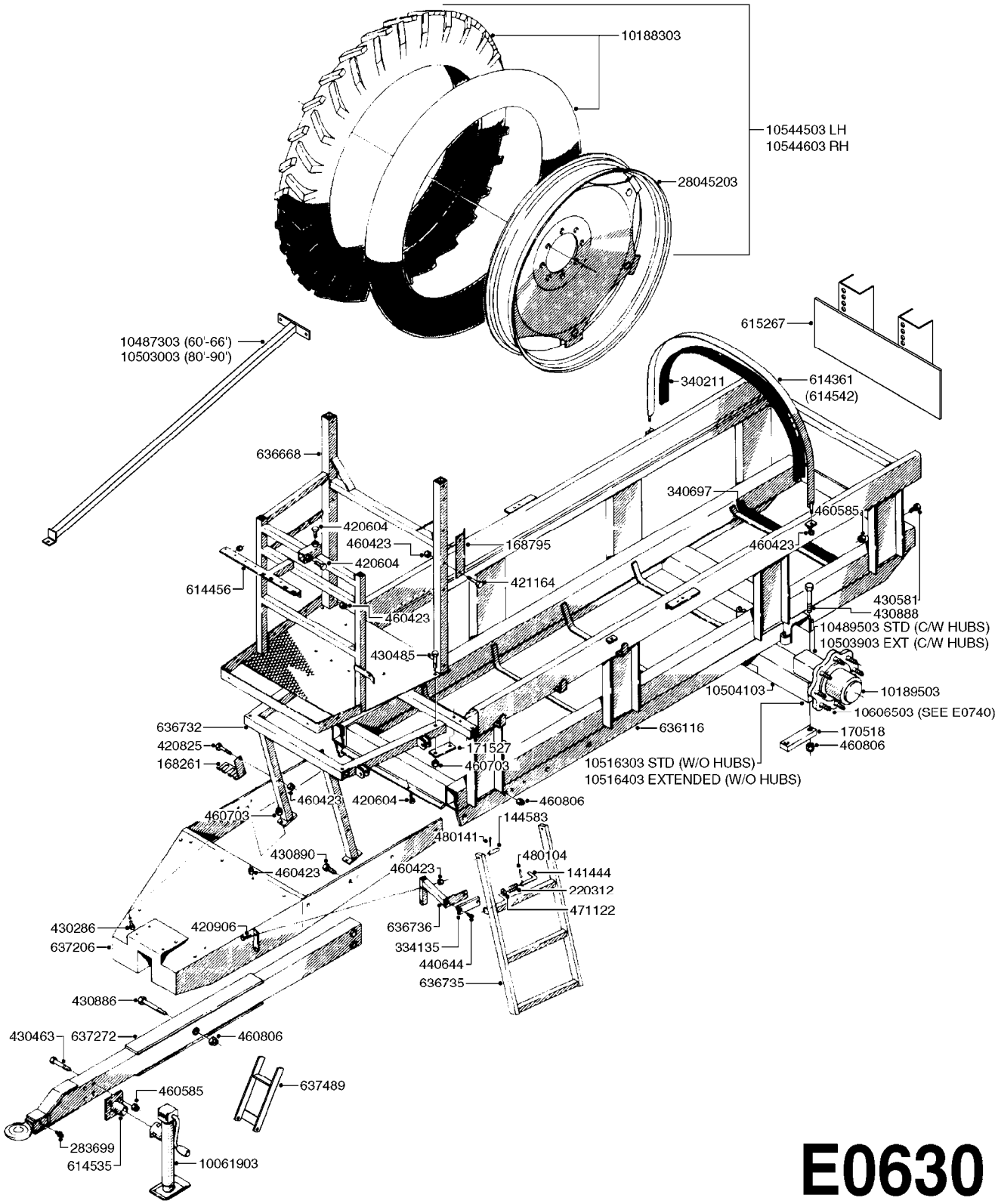

E0630

Agroparts: www.HARDI-INTERNATIONAL.com

FRAME - HC 950M/TWIN 950
E0630-HIN, 01:01:16

Date 12.08.2020 11:39

parts-n°	order qty	description
141444	1	HANDLE D10X175
144583	1	PIN HINGE F.LADDER
168261	1	BRACKET FOR HYD HOSE
168795	1	PLATE 95 X 250 X 3MM
170518	1	FLAT BAR F.AXLE
171527	1	FLATBAR F. PLATFORM HC650/950
220312	1	SPRING
283699	1	GREASE NIPPLE M6X1
334135	1	SLIDE SHOE 140X45X15
340211	1	TANK STRAP PACKING 40X1800
340697	1	TANK PACKING 40X700
420604	1	BOLT HEX 8.8 DEL M10X25 FT DIN933
420825	1	BOLT HEX 8.8 DEL M10X65
420906	1	BOLT HEX 8.8 DEL M10X60
421164	1	BOLT HEX 8.8 DEL M10X70
430286	1	BOLT HEX 8.8 DEL M12X30 FT
430463	1	BOLT HEX 8.8 DEL M16X110
430485	1	BOLT HEX 8.8 DEL M12X90
430581	1	BOLT HEX 8.8 DEL M16X40 FT
430886	1	BOLT HEX 8.8 DEL M20X160
430888	1	BOLT HEX 8.8 DEL M20X130
430890	1	BOLT HEX 8.8 DEL M20X50
440644	1	SCREW NO.10 5/8"
460423	1	NUT HEX M10X1.50 LOCK DIN985A2 SS
460585	1	LOCKING NUT M16 DIN985 A2 SS
460703	1	NUT HEX M12X1.75 LOCK DIN985A2 SS
460806	1	NUT HEX M20X2.50 LOCK DIN985A2 SS
471122	1	WASHER, M10, Ø20/10.5X 2.0, SS
480104	1	PIN RETAINING M3X16 GALV.
480141	1	PIN COTTER M4X20
614361	1	TANK STRAP HC650 L=92.5"
614456	1	BRACKET F.EC 3&4 BANK VALVES
614535	1	JACK MOUNTING WELDMENT HC950
614542	1	TANK STRAP LA 210/265/310 95"
615267	1	.
636116	1	TANK FRAME BARE HC950
636668	1	PLATFORM F.HC950
636732	1	FRAME F.PLATFORM HC950
636735	1	STEP HC950
636736	1	BRACKET FOR STEP HC950
637206	1	DRAW BAR & PLATFORM MOUNT
637272	1	TONGUE HC950M
637489	1	BRACKET F.PTO SUPPORT HC
10061903	1	JACK F300/500/575 5000LB
10188303	1	TIRE 13.6" X 38"
10189503	1	NUT HEX NF 9/16 WHEEL STUD
10487303	1	SIDE BRACE W/M HC950 EAGLE
10489503	1	AXLE INSERT ASSY.HC950 SHORT
10503003	1	SIDE BRACE HC950 80/90'EAG
10503903	1	AXLE INSERT ASSY.HC950 LONG
10504103	1	AXLE REINFORCE.W/M 90'HC950
10516303	1	INSERT W/M HC950 W/SPIND.SHORT
10516403	1	INSERT W/M HC950 W/SPIND.LONG
10544503	1	TIRE ASSY 13.6 X 38 LH 8BLT HD
10544603	1	TIRE ASSY 13.6 X 38 RH 8BLT HD
10606503	1	HUB ASSY.NAV550/800/1000 HC
28045203	1	RIM 38X12 8/8/6 1.06-OS GRAY

TANK - CM 875/1200
E0640-HIN, 01:01:16

Date 12.08.2020 11:39

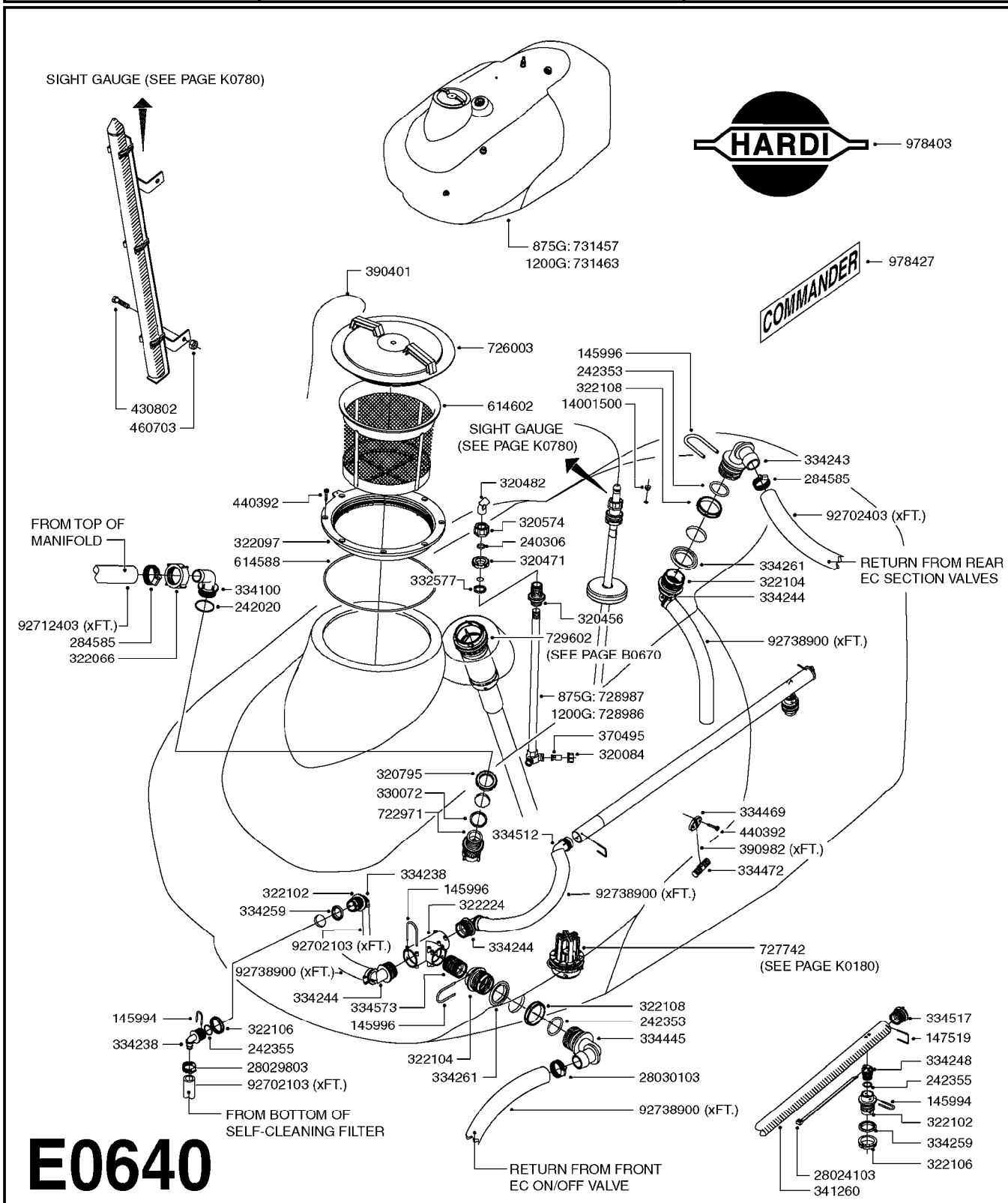

E0640

Agroparts: www.HARDI-INTERNATIONAL.com

TANK - CM 875/1200
E0640-HIN, 01:01:16

Date 12.08.2020 11:39

parts-n°	order qty	description
145994	1	FITT.DK S-40 FORK
145996	1	FITT.DK S-67 FORK
147519	1	CLAMP D3/32 L=52MM
240306	1	O-RING D29/D21X4
242020	1	O-RING 39.2 X 3 VITON
242353	1	O-RING 3 X 44.2 VITON
242355	1	O-RING D19.2X3.0 VITON F.S-40
284585	1	CLAMP HOSE GEAR 1" MINI 020
320084	1	FITT.DK NUT 1/2" BSP
320456	1	FITT.DK BULKHEAD 1"BSP DOUBLE
320471	1	FITT.DK NUT 1" BSP JAMB
320482	1	FITT.DK ELB. 1/2" BSP 60 DEG.
320574	1	FITT.DK NUT 1" BSP SPECIAL
320795	1	FITT.DK NUT 1-1/2" BSP JAMB
322066	1	FITT.DK S-56 NUT
322097	1	THREADED RING F. LID
322102	1	FITT.DK S-40 BULKHEAD
322104	1	FITT.DK S-67 BULKHEAD
322106	1	FITT.DK S-40 BULKHEAD NUT
322108	1	FITT.DK S-67 BULKHEAD NUT
322224	1	FITT.DK S-67 TEE
330072	1	O-RING D53.5/D45.5X4
332577	1	O-RING D38/D30X4 F.1" PUR.
334100	1	FITT.DK S-61 ELB.1" 110 DEG.
334238	1	FITT.DK S-40 ELB.1/2"
334243	1	FITT.DK S-67 ELB.1"
334244	1	FITT.DK S-67 ELB.1-1/4"
334248	1	FITT.DK S-40 PLUG
334259	1	GASKET F. S-40 BULKHEAD
334261	1	GASKET F. S-67 BULKHEAD
334445	1	FITT.DK S-67 ELB.1-1/2"
334469	1	CLEVIS F.CORD TOP DRAIN ASSY.
334472	1	HANDLE FOR TOP DRAIN
334512	1	FITT.DK SPEC.ELB.1-1/4"110DEG
334517	1	END CAP F. SPARGER TUBE
334573	1	FITT.DK S-67 CONNECTOR
341260	1	SPARGE TUBE COMMANDER
370495	1	NOZZLE INJECTOR 5066-3.0
390401	1	CORD NYLON F.LID 900MM
390982	1	CORD NYLON 4000MM
430802	1	BOLT HEX 8.8 DEL M12X75
440392	1	SCREW 6.3 X 25.0 DIN7981C TORX
460703	1	NUT HEX M12X1.75 LOCK DIN985A2 SS
614588	1	SEAL F. LID
614602	1	FILTER BASKET
722971	1	SAFETY VALVE SCF 217PSI(15BAR)
726003	1	LID F. TANK
727742	1	TOP DRAIN CORD TYPE
728986	1	AGITATION TUBE L=54.88"
728987	1	AGITATION TUBE L=47.44"
729602	1	TOP SUCTION KIT NAV 2"
731457	1	TANK ASSY COMPLETE CM875
731463	1	TANK ASSY COMPLETE CM1200
978403	1	DECAL COMPANY 280 X 450
978427	1	DECAL COMMANDER 125 X 600MM
14001500	1	GROMMET F.TOP DRAIN CORD
28024103	1	TIE STRAP L=8" x W=3/16"
28029803	1	CLAMP HOSE GEAR P1/2" 6708
28030103	1	CLAMP HOSE GEAR P5/4-S1.5"6724
92702103	1	HOSE R X1/2" X300PSI WP X0012"
92702403	1	HOSE PVC SUCT GRAY 1"

parts-n°	order qty	description
92712403	1	HOSE R X1" X300PSI WP X0012"
92738900	1	HOSE R X PVC X 1-1/4" 0012"

TANK - CM+1200, CM1500
E0650-HIN, 23:08:18

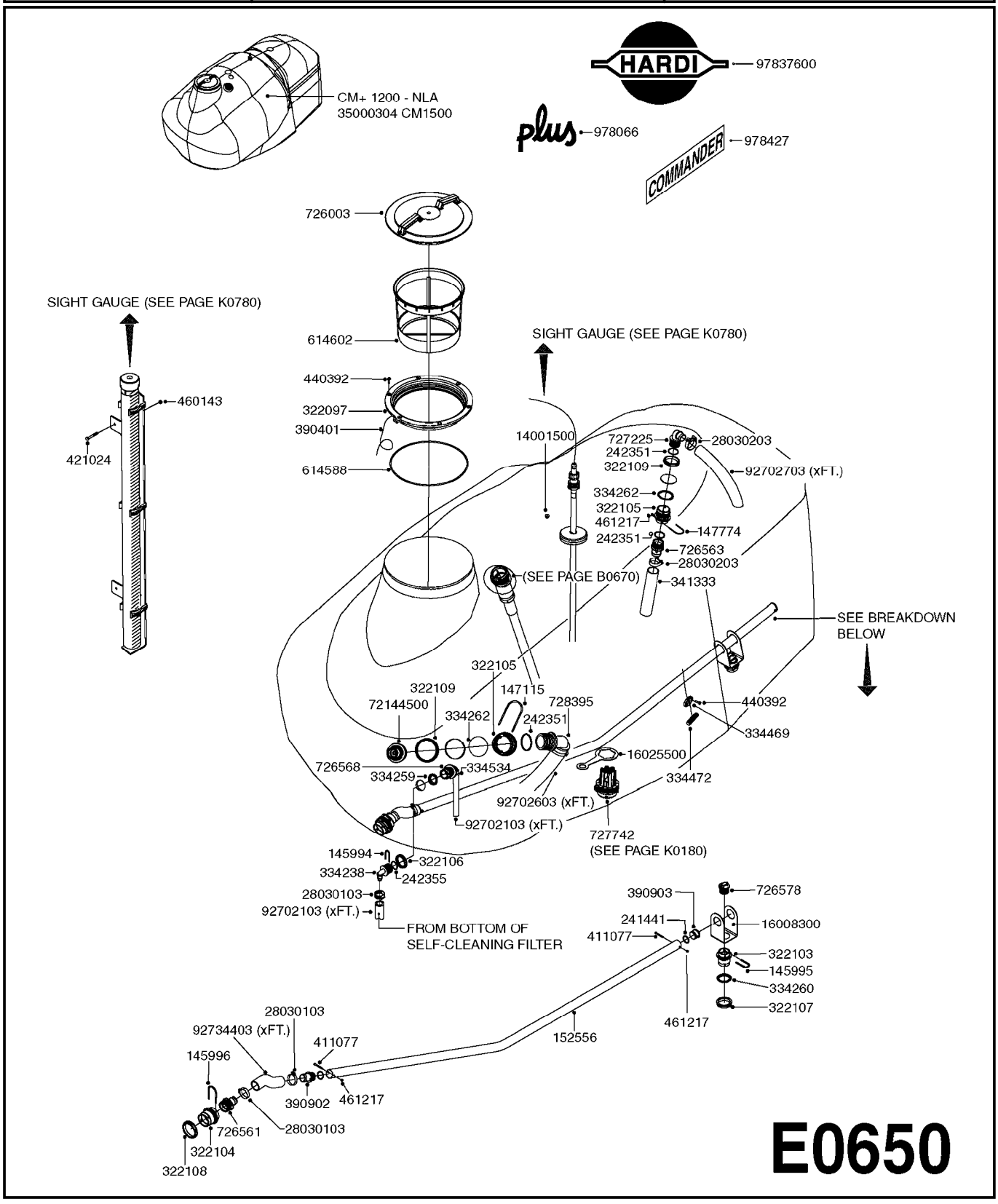

E0650

Agroparts: www.HARDI-INTERNATIONAL.com

TANK - CM+1200, CM1500
E0650-HIN, 23:08:18

Date 12.08.2020 11:39

parts-n°	order qty	description
145994	1	FITT.DK S-40 FORK
145995	1	FITT.DK S-53 FORK
145996	1	FITT.DK S-67 FORK
147115	1	FITT.DK S-93 FORK SPECIAL
147774	1	FITT.DK S-93 FORK W. M5 THREAD
152556	1	SPARGE TUBE CM1200+
241441	1	O-RING D29.3X3
242351	1	O-RING D69.5X3.0 VITON F.S-93
242355	1	O-RING D19.2X3.0 VITON F.S-40
322097	1	THREADED RING F. LID
322103	1	FITT.DK S-53 BULKHEAD
322104	1	FITT.DK S-67 BULKHEAD
322105	1	FITT.DK S-93 BULKHEAD DOUBLE
322106	1	FITT.DK S-40 BULKHEAD NUT
322107	1	FITT.DK S-53 BULKHEAD NUT
322108	1	FITT.DK S-67 BULKHEAD NUT
322109	1	FITT.DK S-93 BULKHEAD NUT
334238	1	FITT.DK S-40 ELB.1/2"
334259	1	GASKET F. S-40 BULKHEAD
334260	1	GASKET F. S-53 BULKHEAD
334262	1	GASKET F.S-93 BULKHEAD
334469	1	CLEVIS F.CORD TOP DRAIN ASSY.
334472	1	HANDLE FOR TOP DRAIN
334534	1	CLAMP HOSE PLASTIC 1/2"
341333	1	TUBE Ø57/Ø52 L=1500 BLACK PE
390401	1	CORD NYLON F.LID 900MM
390902	1	SPARGE TUBE FITT FRONT
390903	1	CAP SPARGE TUBE
411077	1	SCREW M5X45 STAINLESS
421024	1	BOLT HEX 8.8 DEL M8X60
440392	1	SCREW 6.3 X 25.0 DIN7981C TORX
460143	1	LOCK NUT M8 SST A2 DIN985
461217	1	NUT HEX M5 LOCK
614588	1	SEAL F. LID
614602	1	FILTER BASKET
726003	1	LID F. TANK
726561	1	FITT.DK S-67 STR.1-1/4" O-RING
726563	1	FITT.DK S-93 STR 2" W/O-RING
726568	1	FITT.DK.S-53 HB 1/2"90 W/O-RING
726578	1	FITT.DK S53 PLUG WITH O-RING
727225	1	FITT.DK S-93 ELB.2'PVC W/ORING
727742	1	TOP DRAIN CORD TYPE
728395	1	FITT.DK S-93 ELB.1-1/2" 90 DEG
978066	1	DECAL PLUS
978427	1	DECAL COMMANDER 125 X 600MM
14001500	1	GROMMET F.TOP DRAIN CORD
16008300	1	BRACKET SPARGE TUBE
16025500	1	TANK SPACER SIGHT GAUGE
28030103	1	CLAMP HOSE GEAR P5/4-S1.5"6724
28030203	1	CLAMP HOSE T-BOLT S2" 235-67
35000304	1	TANK RAW CM1500
72144500	1	SAFETY VALVE 15 BAR S93
92702103	1	HOSE R X1/2" X300PSI WP X0012"
92702603	1	HOSE PVC SUCT GRAY 1-1/2"
92702703	1	HOSE PVC SUCT GRAY 2"
92734403	1	HOSE R X5/4" X200PSI WP X0012"
97837600	1	HARDI LOGO Ø282X450 F.METAL/ PLASTIC 3D

FRAME - CM 875/1200
E0660-HIN, 01:01:16

Date 12.08.2020 11:39

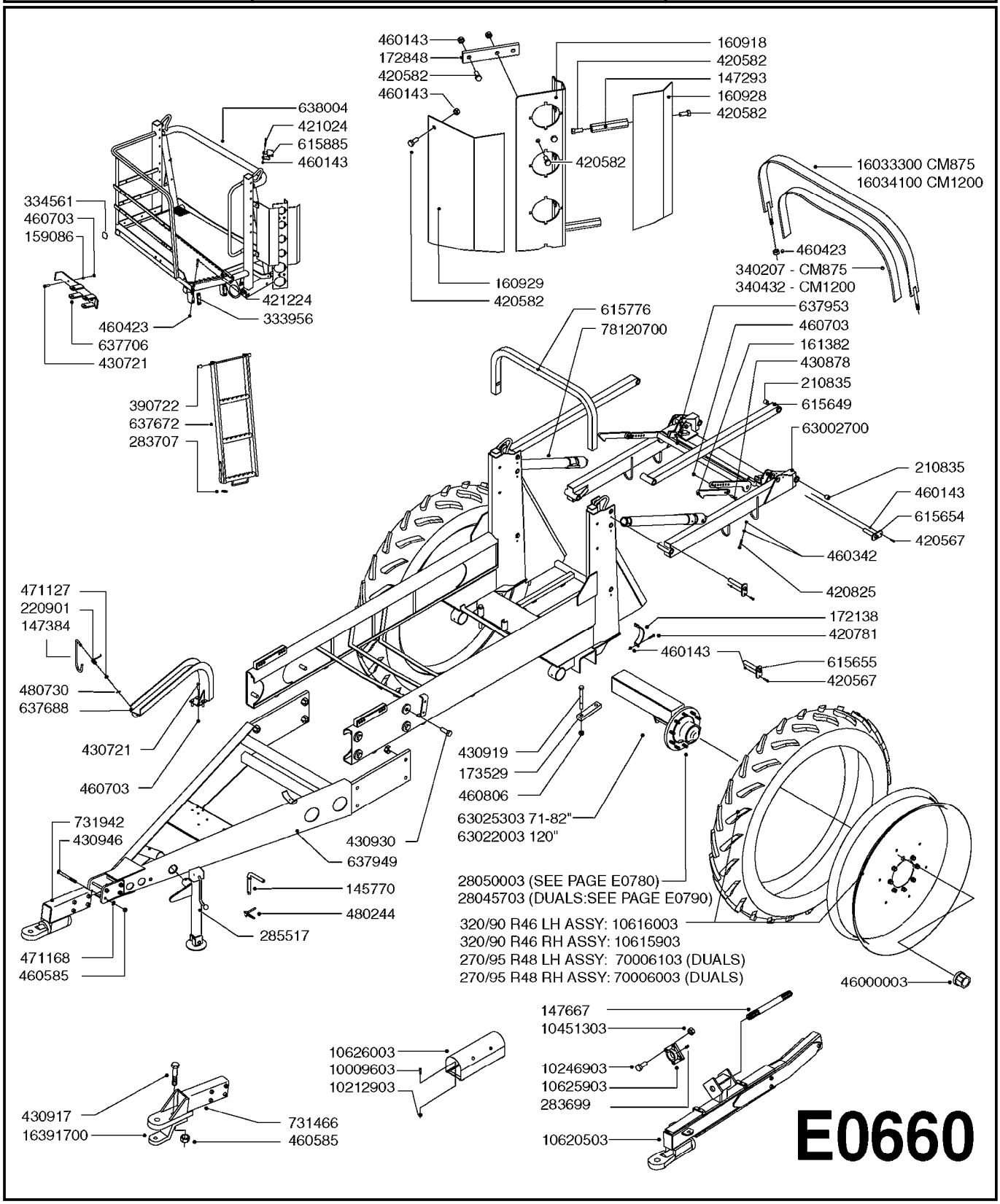

FRAME - CM 875/1200
E0660-HIN, 01:01:16

Date 12.08.2020 11:39

parts-n°	order qty	description
145770	1	LOCKING PAWL D16X110
147293	1	STUD M8 FEMALE L=80
147384	1	HOOK FOR PTO CM
147667	1	PTO SHAFT 1-3/8X6 1-3/8X6
159086	1	BUSHING D16.0/13.0 L=10MM
160918	1	BRACKET F. MANIFOLD CM
160928	1	COVER F. MANIFOLD RIGHT CM
160929	1	COVER F. MANIFOLD LEFT CM
161382	1	HOOK F.TRANSPORT LOCK L=340MM
172138	1	BRACKET F. HYD.ACCUMULATOR CM
172848	1	FLATBAR 30 X 8 L=140
173529	1	FLATBAR 60X30 L=265/2XD22
210835	1	BUSHING D28/25 L=25
220901	1	SPRING F. PTO HOOK CM
283699	1	GREASE NIPPLE M6X1
283707	1	PLUG 50X20X2
285517	1	JACK COMP.F.CM875/1200/1500
333956	1	SLIDE SHOE 91X25X10
334561	1	PLUG 50x50x2 F.SQ.TUBE
340207	1	TANK STRAP PACKING 40X800
340432	1	TANK FRAME PACKING 40X1000
390722	1	BUSHING D26/11 L=32 F.LADDER
420567	1	BOLT HEX 8.8 DEL M8X30 FT
420582	1	BOLT HEX 8.8 DEL M8X20 FT A2
420781	1	BOLT HEX 8.8 DEL M8X50
420825	1	BOLT HEX 8.8 DEL M10X65
421024	1	BOLT HEX 8.8 DEL M8X60
421224	1	BOLT HEX 8.8 DEL M10X55
430721	1	BOLT HEX 8.8 DEL M12X40 FT
430878	1	BOLT HEX 8.8 DEL M12X45 DIN931
430917	1	SCREW M20X90
430919	1	BOLT HM 20-180/52 8.8 DAC DIN931
430930	1	BOLT HEX 8.8 DEL M24X70
430946	1	BOLT HEX M16 x 180 8.8 DEL
460143	1	LOCK NUT M8 SST A2 DIN985
460342	1	NUT HEX M10 DEL DIN934
460423	1	NUT HEX M10X1.50 LOCK DIN985A2 SS
460585	1	LOCKING NUT M16 DIN985 A2 SS
460703	1	NUT HEX M12X1.75 LOCK DIN985A2 SS
460806	1	NUT HEX M20X2.50 LOCK DIN985A2 SS
471127	1	WASHER, M12, Ø24/13X24X2.5 SS
471168	1	PAIR OF WASHERS NL16 17X25,4x3,4
480244	1	PIN SNAP D4.5
480730	1	SPRING DOWEL PIN 5X30 SST
615649	1	ARM UPPER F. PARALIFT
615654	1	PIN D25 X 123 F. PARALIFT
615655	1	PIN D25 X 156 F. PARALIFT
615776	1	BRACE FOR FRAME CM
615885	1	MOUNT BKT.F.EC ON/OFF CM875/12
637672	1	LADDER F.CM
637688	1	PTO SUPPORT ARM F. CM
637706	1	JACK STORAGE BRACKET
637949	1	DRAWBAR WELDMENT CM875/1200
637953	1	TRANSPORT SAFETY HOOK ARM ASSY
638004	1	PLATFORM WELDMENT CM 875/1200
731466	1	HITCH CLEVIS KIT F.CM875/1200
731942	1	HITCH SWIVEL KIT F.CM1200/1500
10009603	1	BOLT HEX 3/8 NC GR.2 01.00"
10212903	1	NUT HEX NC (NYLON LOCK) 3/8"
10246903	1	BOLT HEX 1/2 NC GR.2 02.00"

FRAME - CM 875/1200
E0660-HIN, 01:01:16

Date 12.08.2020 11:39

parts-n°	order qty	description
10451303	1	NUT HEX NC (NYLON LOCK) 1/2
10615903	1	TIRE ASSY 2-3/16 OFFSET RH
10616003	1	TIRE ASSY 2-3/16 OFFSET LH
10620503	1	EXTENDED HITCH CM, SWIVEL W/M
10625903	1	BEARING FLANGED FB250-HUB CITY
10626003	1	PTO GUARD FLANGE BLOCK;W/M
16033300	1	TANK STRAP 40x2.0 - 1185MM
16034100	1	TANK STRAP CM1200 L=65"
16391700	1	FLATBAR F. CLEVIS, PAINTED
28045703	1	HUB ASSY 10-13.19-11.02 25000#
28050003	1	HUB F 3.5" 873 15000# PACKAGE
46000003	1	NUT HEX NF 3/4" FLANGED F.HUB
63002700	1	PARALIFT BENT WELDMENT PAINTED
63022003	1	AXLE CM+1200 120" 3.5"W/ SPNDL
63025303	1	AXLE INSRT CM+1200W.SPDL 71-82
70006003	1	WHEEL ASM.DLS 22"270/95R48 RH
70006103	1	WHEEL ASM.22"DLS 270/95R48 LH
78120700	1	SIN.CYL.Ø60/25-725 2XØ25 LEFT

FRAME - CM+1200
E0670-HIN, 01:01:16

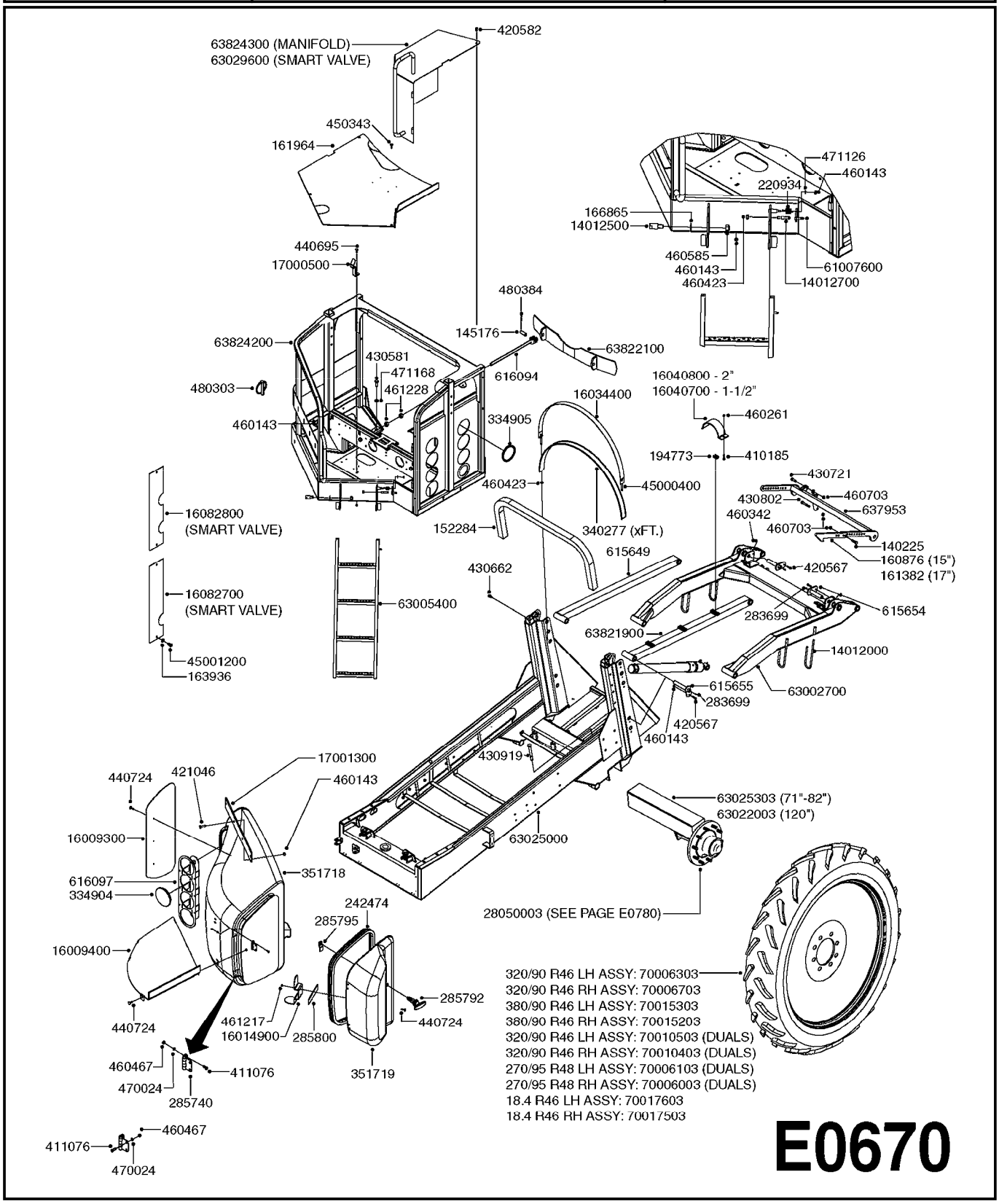

Agroparts: www.HARDI-INTERNATIONAL.com

FRAME - CM+1200
E0670-HIN, 01:01:16

Date 12.08.2020 11:39

parts-n°	order qty	description
140225	1	BOLT SPECIAL F.PARALIFT M12x50
145176	1	PIN D19.8 X 60
152284	1	CROSSBAR F. FRAME TOWERS CM+
160876	1	HOOK F.TRANSPORT LOCK L=280MM
161382	1	HOOK F.TRANSPORT LOCK L=340MM
161964	1	PLATEFORM DECK PLATE CM+ 750
163936	1	WASHER D15/D6.2X1
166865	1	WASHER D35/D25X2
194773	1	C CHANNEL 14.5X8,8X3,5X2 L=24
220934	1	LAT.PRESS.SPRING D20/3 L=25 SS
242474	1	SEAL 16X28XL=' LOCKER DOOR CM+
283699	1	GREASE NIPPLE M6X1
285740	1	HINGE
285792	1	LATCH LOCKER DOOR CM+
285795	1	LATCH PLATE LOCKER DOOR CM+
285800	1	VELCRO BAND
334904	1	PLUG D.108mm
334905	1	PLUG D.138mm
340277	1	TANK PACKING - 40mm WIDE x 12"
351718	1	LOCKER FRONT CM+
351719	1	DOOR LOCKER FRONT CM+
410185	1	BOLT HEX 8.8 DEL M6X16
411076	1	SCREW M5X16 STAINLESS
420567	1	BOLT HEX 8.8 DEL M8X30 FT
420582	1	BOLT HEX 8.8 DEL M8X20 FT A2
421046	1	BOLT HEX M8X25/25 A2 SS DIN933
430581	1	BOLT HEX 8.8 DEL M16X40 FT
430662	1	BOLT HEX 8.8 DEL M12X20 FT
430721	1	BOLT HEX 8.8 DEL M12X40 FT
430802	1	BOLT HEX 8.8 DEL M12X75
430919	1	BOLT HM 20-180/52 8.8 DAC DIN931
440695	1	BOLT CARRIAGE M8X25
440724	1	CARRIAGE BOLT M5X20
450343	1	SCREW M8X30 ALLEN HEAD C/S SS
460143	1	LOCK NUT M8 SST A2 DIN985
460261	1	NUT HEX M6X1.00 LOCK DIN985 A2 SS
460342	1	NUT HEX M10 DEL DIN934
460423	1	NUT HEX M10X1.50 LOCK DIN985A2 SS
460467	1	NUT HEX M5 GALV.
460585	1	LOCKING NUT M16 DIN985 A2 SS
460703	1	NUT HEX M12X1.75 LOCK DIN985A2 SS
461217	1	NUT HEX M5 LOCK
461228	1	NUT HEX M20
470024	1	WASHER D5.3 LOCK
471126	1	WASHER, M8, Ø16/ 8.4X 1.6, SS
471168	1	PAIR OF WASHERS NL16 17X25,4x3,4
480303	1	PIN 7/16 SNAP RING
480384	1	PIN COTTER 3/16 x 1-1/2"
615649	1	ARM UPPER F. PARALIFT
615654	1	PIN D25 X 123 F. PARALIFT
615655	1	PIN D25 X 156 F. PARALIFT
616094	1	THREADED FORK PLATFORM CM+
616097	1	MOUNT BRACKET GAUGES CM+
637953	1	TRANSPORT SAFETY HOOK ARM ASSY
14012000	1	HOOK FOR HOSES PARALIFT
14012500	1	THREADED PIN M16X62
14012700	1	PIN TREADED M8-1.25X58L
16009300	1	SHIELD F. FRONT LOCKER CM+
16009400	1	SHELF F. LOCKER CM+
16014900	1	BKT F. FIRE EXTIG. CM+
16034400	1	TANK STRAP 40X2.0-1960MM CM12+

parts-n°	order qty	description
16040700	1	HOSE HOLDER 1-1/2" CM+
16040800	1	HOSE HOLDER 2" CM+
16082700	1	SHIELD SINGLE MANIFOLD CM+ SV
16082800	1	SHIELD DOUBLE MANIFOLD CM+ SV
17000500	1	MT BKT CLEAN WATER BOT. CM+
17001300	1	BRACKET 60X6 L=536
28050003	1	HUB F 3.5" 873 15000# PACKAGE
45000400	1	T-BOLT SPECIAL F.TANK STRAP ES
45001200	1	SCREW M6X12 ALLEN HEAD SS
61007600	1	HOOK FOR STEPS CM+
63002700	1	PARALIFT BENT WELDMENT PAINTED
63005400	1	LADDER CM+
63022003	1	AXLE CM+1200 120" 3.5"W/ SPNDL
63025000	1	MAIN FRAME 1200 PLUS
63025303	1	AXLE INSRT CM+1200W.SPDL 71-82
63029600	1	MANIFOLD SHIELD CM+ SV
63821900	1	PARALIFT ARM W/MOUNTS
63822100	1	TANK FRONT RESTRAINT
63824200	1	WORK PLATFORM 750 PLUS
63824300	1	MANIFOLD SHIELD CM+
70006003	1	WHEEL ASM.DLS 22"270/95R48 RH
70006103	1	WHEEL ASM.22"DLS 270/95R48 LH
70006303	1	WHEEL ASM. 320/90R46 LH
70006703	1	WHEEL ASM. 320/90R46 RH
70010403	1	WHEEL ASM.30"DLS 320/90R46 RH
70010503	1	WHEEL ASM.30"DLS 320/90R46 LH
70015203	1	TIRE ASSY 380/90R46 HL RH
70015303	1	TIRE ASSY 380/90R46 HL LH
70017503	1	TIRE ASSY R.H. 18.4/R46"
70017603	1	TIRE ASSY L.H. 18.4/R46"

DRAWBAR - CM+750/1200
E0680-HIN, 01:01:16

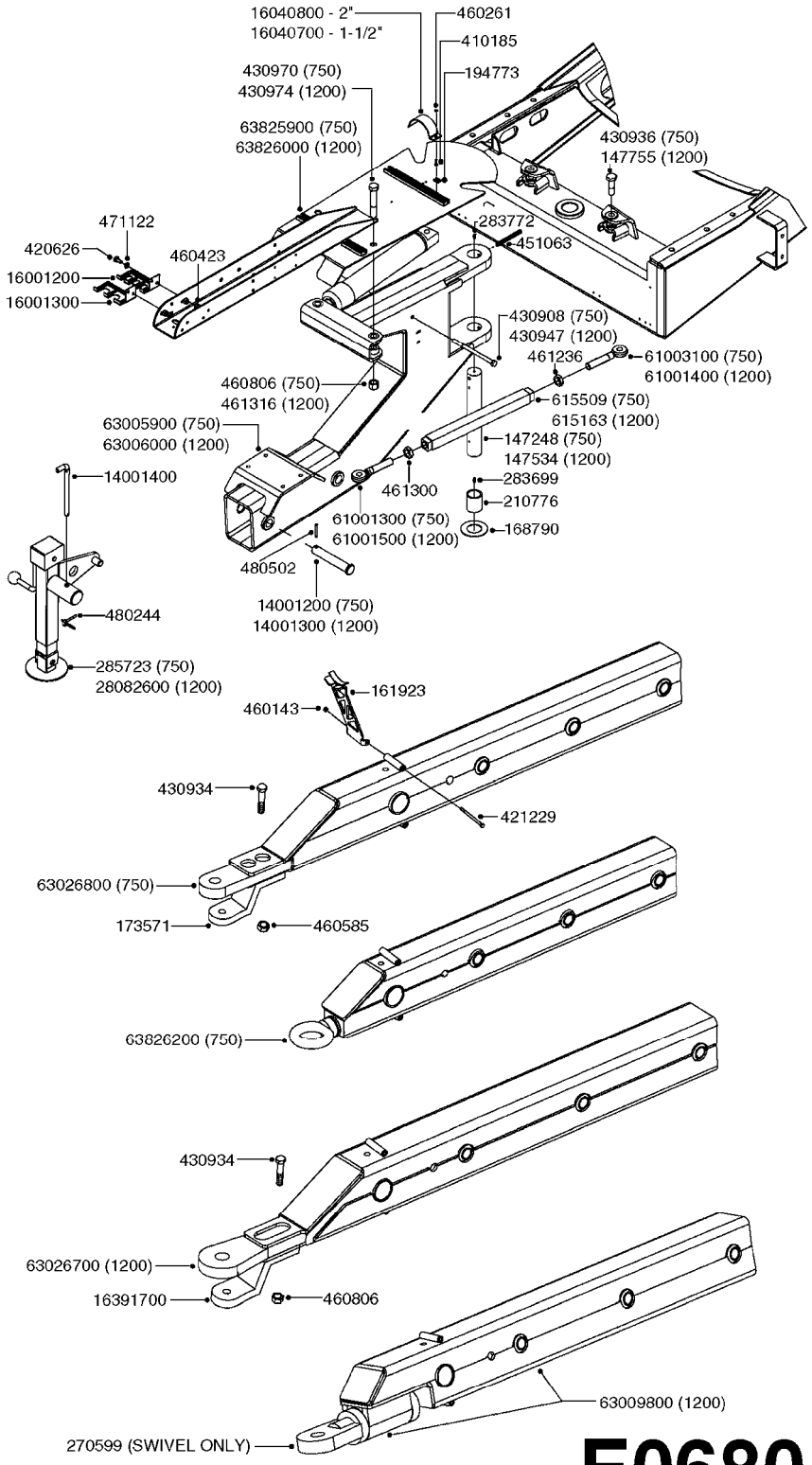

E0680

Agroparts: www.HARDI-INTERNATIONAL.com

DRAWBAR - CM+750/1200
E0680-HIN, 01:01:16

Date 12.08.2020 11:39

parts-n°	order qty	description
147248	1	PIN PIVOT F. DRAWBAR CM750+
147534	1	PIN PIVOT F.DRAWBAR CM1200+
147755	1	BOLT HEX SPECIAL M30 L=75
161923	1	SUPPORT PLATE F. PTO CM+
168790	1	WASHER D96.0/52.0 X 3.0
173571	1	FLATBAR F. USA HITCH CM750
194773	1	C CHANNEL 14.5X8,8X3,5X2 L=24
210776	1	BUSHING F.TWIN STEERING ARM
270599	1	SWIVEL Ø42
283699	1	GREASE NIPPLE M6X1
283772	1	GREASE NIPPLE M6X1 90°
285723	1	JACK ASSY. COMMANDER 750 PLUS
410185	1	BOLT HEX 8.8 DEL M6X16
420626	1	BOLT HEX 8.8 DEL M10X20 FT
421229	1	BOLT HEX 8.8 DEL M8x120
430908	1	BOLT HEX 8.8 DEL M12X200
430934	1	BOLT HEX 8.8 DEL M16X80
430936	1	BOLT HEX M20 X 70MM DEL
430947	1	BOLT HEX 8.8 DEL M12X210
430970	1	BOLT HEX M20X120 DIN931- DEL
430974	1	BOLT HEX M30X140
451063	1	SET SCREW M12X40
460143	1	LOCK NUT M8 SST A2 DIN985
460261	1	NUT HEX M6X1.00 LOCK DIN985 A2 SS
460423	1	NUT HEX M10X1.50 LOCK DIN985A2 SS
460585	1	LOCKING NUT M16 DIN985 A2 SS
460806	1	NUT HEX M20X2.50 LOCK DIN985A2 SS
461236	1	NUT HEX M24X1.5
461300	1	NUT HEX M24X1.5 LH
461316	1	NUT HEX LOCK M30X3.5 DIN 985
471122	1	WASHER, M10, Ø20/10.5X 2.0, SS
480244	1	PIN SNAP D4.5
480502	1	PIN RETAINING M10X50 DIN 1481
615163	1	TURN BUCKLE COM. 1200+ M24
615509	1	TURN BUCKLE COM. 750+ M24 - RED
14001200	1	DRAWBAR PIN COMMANDER 750 PLUS
14001300	1	DRAWBAR PIN CM1200+
14001400	1	PIN F. JACKSTAND CM+
16001200	1	HYD HOSE STORAGE BKT. REAR
16001300	1	HYD HOSE STORAGE BKT. FRONT
16040700	1	HOSE HOLDER 1-1/2" CM+
16040800	1	HOSE HOLDER 2" CM+
16391700	1	FLATBAR F. CLEVIS, PAINTED
28082600	1	SUPPORT LEG F. NAV, CM+3000KG
61001300	1	TURN BUCKLE END LH 750+ M24
61001400	1	TURN BUCKLE END RH 1200+ M24
61001500	1	TURN BUCKLE END LH 1200 PLUS
61003100	1	TURN BUCKLE END RH 750+ M24
63005900	1	HITCH COMMANDER 750 PLUS
63006000	1	HITCH COMMANDER 1200 PLUS
63009800	1	SWIVEL HITCH COM. 1200 Plus
63026700	1	CLEVIS HITCH COM.+ 1200
63026800	1	CLEVIS HITCH COM.+ 750
63825900	1	CABLE SUPPORT COM 750 PLUS
63826000	1	CABLE HOSE HOLDER COM 1200
63826200	1	SWIVEL HITCH COM. 750 PLUS

FRAME CM 1500
E0690-HIN, 01:01:16

Date 12.08.2020 11:39

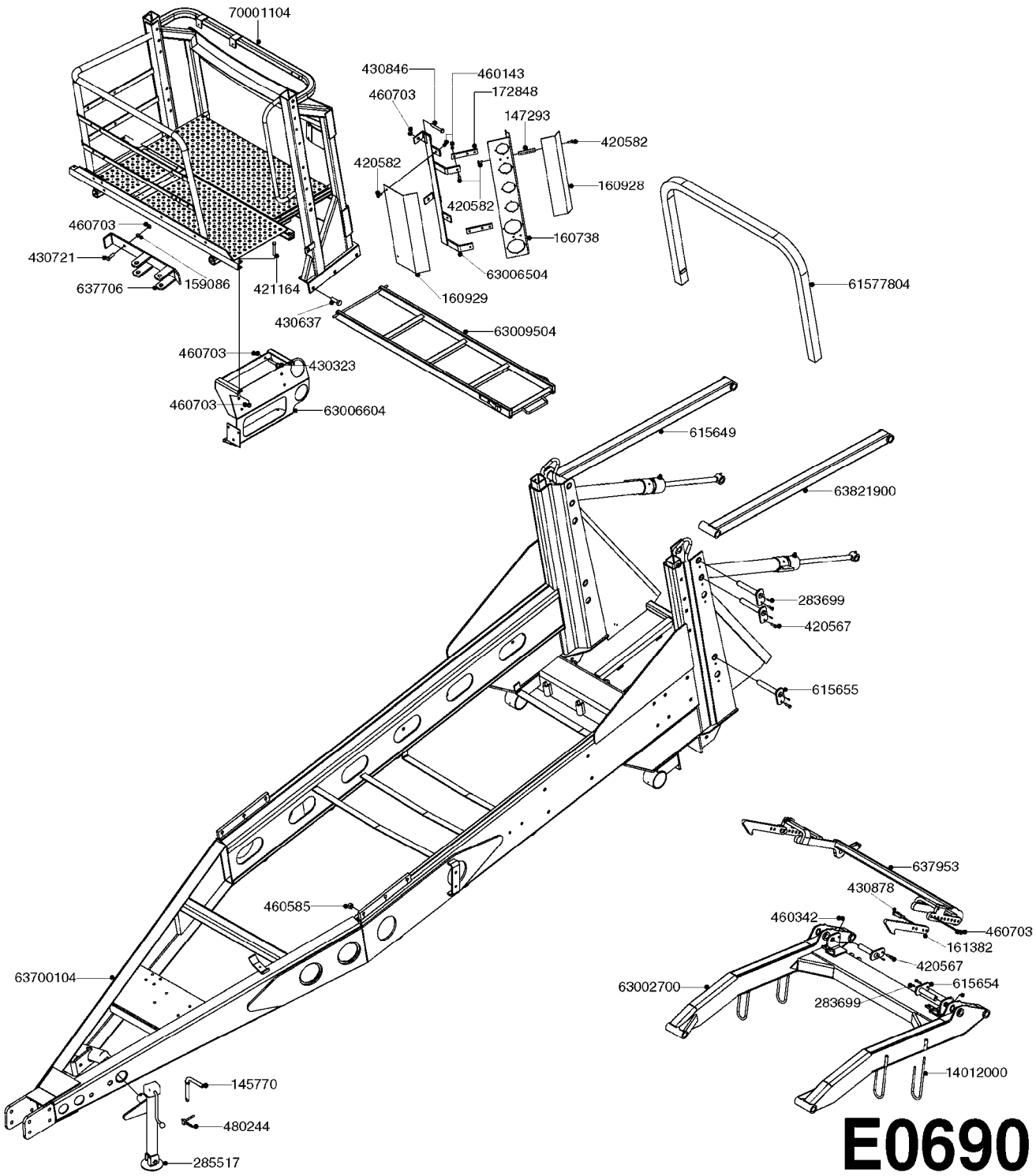

Agroparts: www.HARDI-INTERNATIONAL.com

FRAME CM 1500
E0690-HIN, 01:01:16

Date 12.08.2020 11:39

parts-n°	order qty	description
145770	1	LOCKING PAWL D16X110
147293	1	STUD M8 FEMALE L=80
159086	1	BUSHING D16.0/13.0 L=10MM
160738	1	BRACKET F. MANIFOLD
160928	1	COVER F. MANIFOLD RIGHT CM
160929	1	COVER F. MANIFOLD LEFT CM
161382	1	HOOK F.TRANSPORT LOCK L=340MM
172848	1	FLATBAR 30 X 8 L=140
283699	1	GREASE NIPPLE M6X1
285517	1	JACK COMP.F.CM875/1200/1500
420567	1	BOLT HEX 8.8 DEL M8X30 FT
420582	1	BOLT HEX 8.8 DEL M8X20 FT A2
421164	1	BOLT HEX 8.8 DEL M10X70
430323	1	BOLT HEX 8.8 DEL M12X60
430637	1	BOLT HEX 8.8 DEL M16X50 FT
430721	1	BOLT HEX 8.8 DEL M12X40 FT
430846	1	BOLT HEX 8.8 DEL M12X80
430878	1	BOLT HEX 8.8 DEL M12X45 DIN931
460143	1	LOCK NUT M8 SST A2 DIN985
460342	1	NUT HEX M10 DEL DIN934
460585	1	LOCKING NUT M16 DIN985 A2 SS
460703	1	NUT HEX M12X1.75 LOCK DIN985A2 SS
480244	1	PIN SNAP D4.5
615649	1	ARM UPPER F. PARALIFT
615654	1	PIN D25 X 123 F. PARALIFT
615655	1	PIN D25 X 156 F. PARALIFT
637706	1	JACK STORAGE BRACKET
637953	1	TRANSPORT SAFETY HOOK ARM ASSY
14012000	1	HOOK FOR HOSES PARALIFT
61577804	1	TOP FRAME BRACE CM
63002700	1	PARALIFT BENT WELDMENT PAINTED
63006504	1	MANIFOLD MOUNT BKT. CM1500
63006604	1	SUPPORT BRACKET LADDER STORAGE
63009504	1	LADDER CM 1500
63700104	1	FRAME CM 1500
63821900	1	PARALIFT ARM W/MOUNTS
70001104	1	WORKING PLATFORM

COMMANDER SUSPENDED AXLE
E0700-HIN, 01:01:16

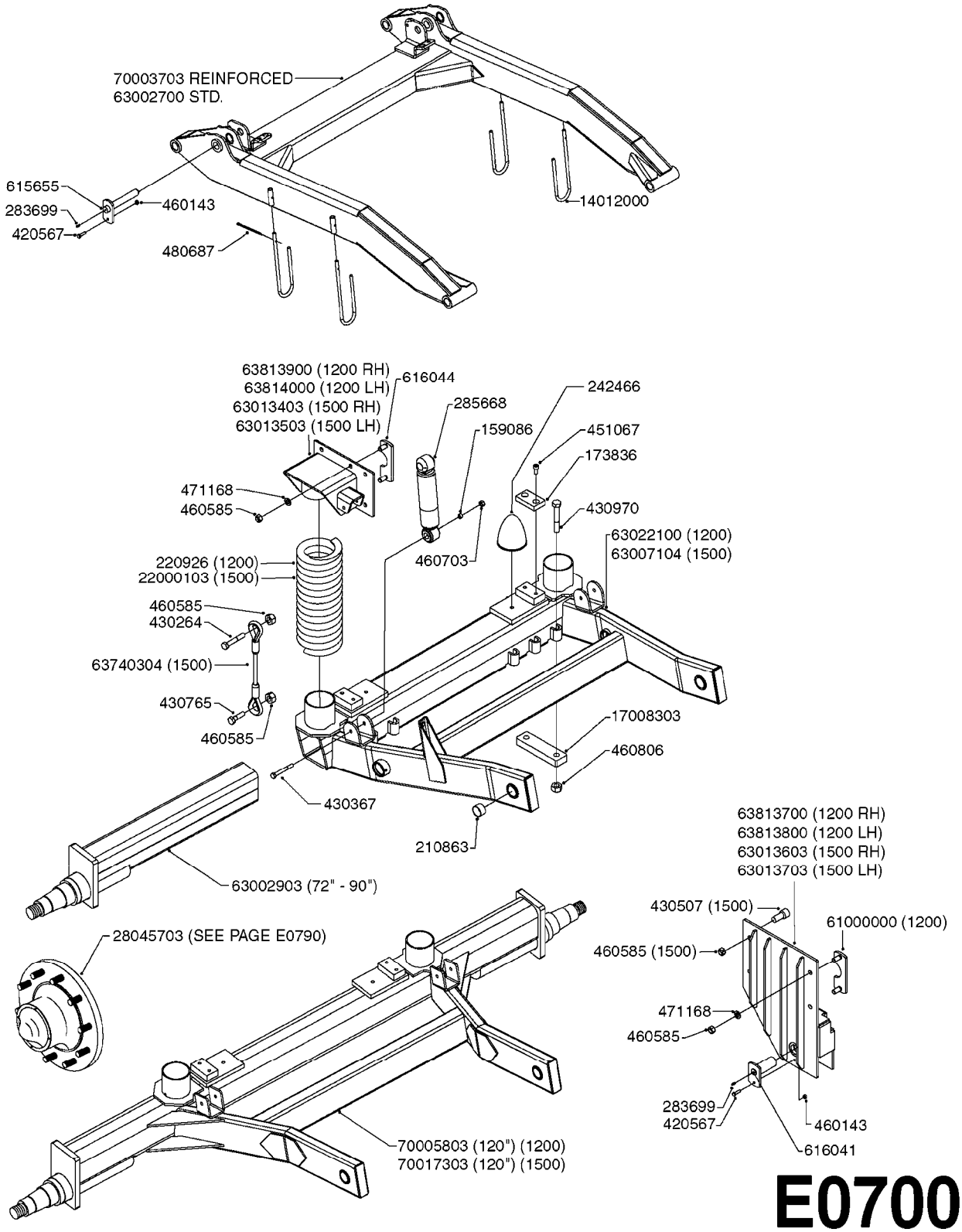

E0700

Agroparts: www.HARDI-INTERNATIONAL.com

COMMANDER SUSPENDED AXLE
E0700-HIN, 01:01:16

Date 12.08.2020 11:39

parts-n°	order qty	description
159086	1	BUSHING D16.0/13.0 L=10MM
173836	1	FL.ST. 60X20 L= 100/2XD13
210863	1	BUSHING DU FLNG. D40/44 L=26
220926	1	SPRING D174.0/28 L=675
242466	1	BUMP STOP F. CM SUSPENSION
283699	1	GREASE NIPPLE M6X1
285668	1	SHOCK ABSORBER L=300/465
420567	1	BOLT HEX 8.8 DEL M8X30 FT
430264	1	BOLT HEX 8.8 DEL M16X100
430367	1	BOLT HEX 8.8 DEL M12X100 DIN931
430507	1	BOLT HEX 8.8 DEL M16X45 FT
430765	1	BOLT HEX 8.8 DEL M16X55
430970	1	BOLT HEX M20X120 DIN931- DEL
451067	1	BOLT ALLEN M12X25 DIN912 SS
460143	1	LOCK NUT M8 SST A2 DIN985
460585	1	LOCKING NUT M16 DIN985 A2 SS
460703	1	NUT HEX M12X1.75 LOCK DIN985A2 SS
460806	1	NUT HEX M20X2.50 LOCK DIN985A2 SS
471168	1	PAIR OF WASHERS NL16 17X25,4x3,4
480687	1	PIN M4X36 SPLIT
615655	1	PIN D25 X 156 F. PARALIFT
616041	1	PIN D40 L = 95
616044	1	FASTENER PLATE/2xM16X1.5 L=45
14012000	1	HOOK FOR HOSES PARALIFT
17008303	1	AXLE SUPPORT CM1500 SUSP.
22000103	1	SPRING CM1500 SUS. ID118/OD178
28045703	1	HUB ASSY 10-13.19-11.02 25000#
61000000	1	FASTENER PLATE/2xM16-1.5 L=50
63002700	1	PARALIFT BENT WELDMENT PAINTED
63002903	1	AXLE INSERT,72"-90"SUS CM 1200
63007104	1	AXLE W/M CM1500 76-90" ADJ.
63013403	1	SPRING CARRIER SUS R.H. CM1500
63013503	1	SPRING CARRIER SUS L.H. CM1500
63013603	1	SWING ARM MT. BKT. R.H. CM1500
63013703	1	SWING ARM MT. BKT. L.H. CM1500
63022100	1	SWINGARM CM3
63740304	1	WIRE D10 X 276
63813700	1	SWINGARM BRACKET RIGHT CM3
63813800	1	SWINGARM BRACKET LEFT CM3
63813900	1	SUSPENSION MOUNTPLATE CM RH
63814000	1	SUSPENSION MOUNTPLATE CM LH
70003703	1	PARALIFT CM BENT REINFORCED
70005803	1	SWINGARM F. SUSP.120"+ 88/132"
70017303	1	AXLE SUS. CM1500 120" FIXED

	Agroparts: www.HARDI-INTERNATIONAL.com	
HARDI	HUB ASSEMBLY F.1-1/4" SPINDLE E0710-HIN, 01:01:16	Page 0 Date 12.08.2020 11:39

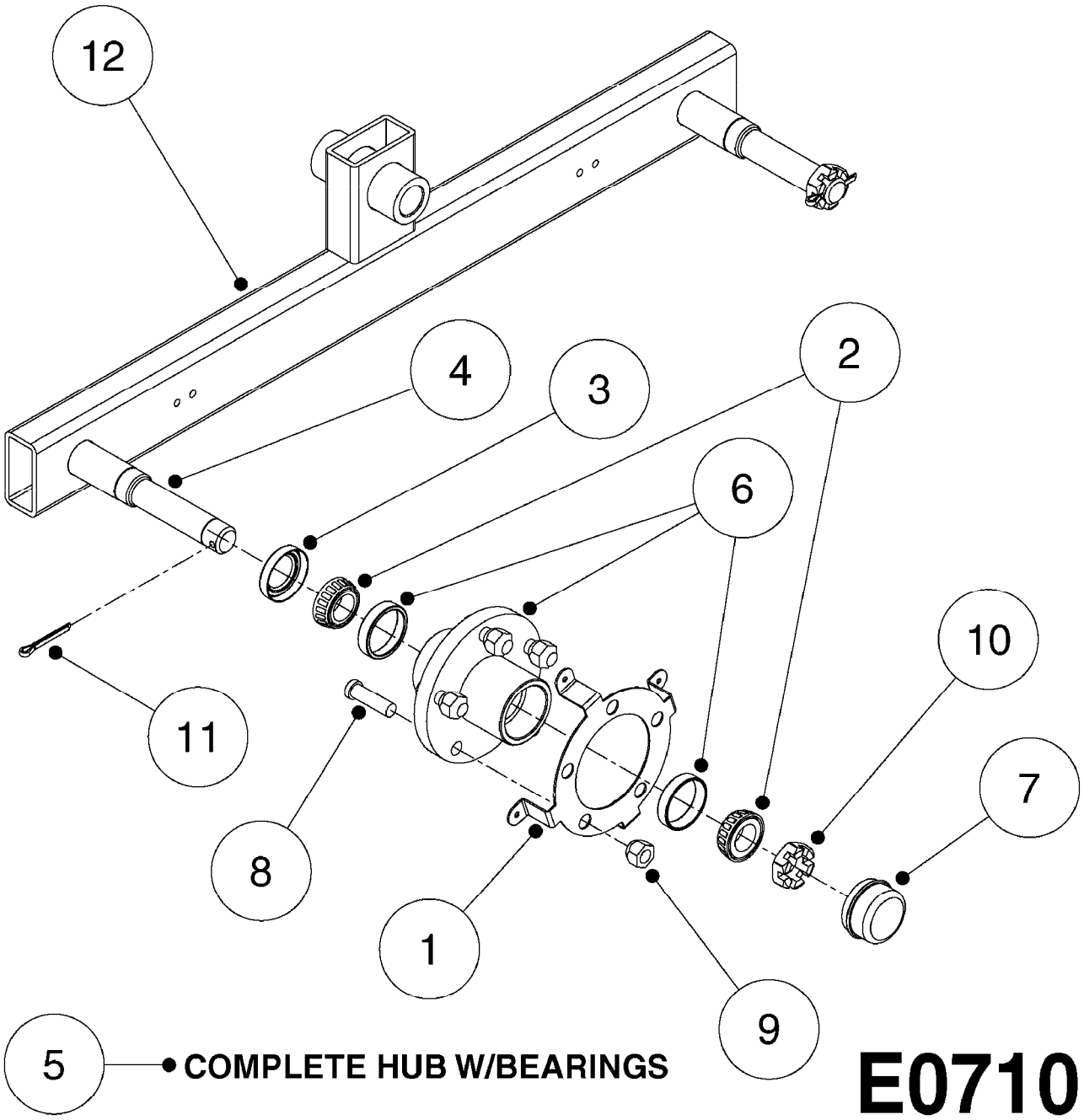

Agroparts: www.HARDI-INTERNATIONAL.com

HUB ASSEMBLY F.1-1/4" SPINDLE
E0710-HIN, 01:01:16

Date 12.08.2020 11:39

Pos.	parts-nº	order qty	description
1	16097703	1	SPEED RING, 5 BOLT, 4.5" B.C.
2	21002303	1	BEARING, TAPPERED, 1" SPINDLE
3	21002403	1	SEAL, GRASE F. 1000LB HUB
4	28031403	1	SPINDLE, 1.25"x9" INCLUDES 46001403 AND 48000303
5	28031503	1	HUB PKG.1.25"SPINDLE 5-4.5-2.5 COMPLETE HUB W/BEARINGS
6	28038003	1	HUB, 1000LB W.BRG RACES 1"SPDL
7	29003603	1	HUB CAP F. 1000LB HUB
8	45000203	1	BOLT, WHEEL STUD 1/2"
9	46001303	1	NUT - LUG 1/2" - 1000LB HUB
10	46001403	1	NUT, CASTLE F. 1" SPINDLE
11	48000303	1	PIN, COTTER 5/32" X 2"
12	63015903	1	TANDEM BEAM, WITH SPINDLE, ATV

HUB ASSEMBLY F.1-3/4" SPINDLE
E0720-HIN, 11:09:17

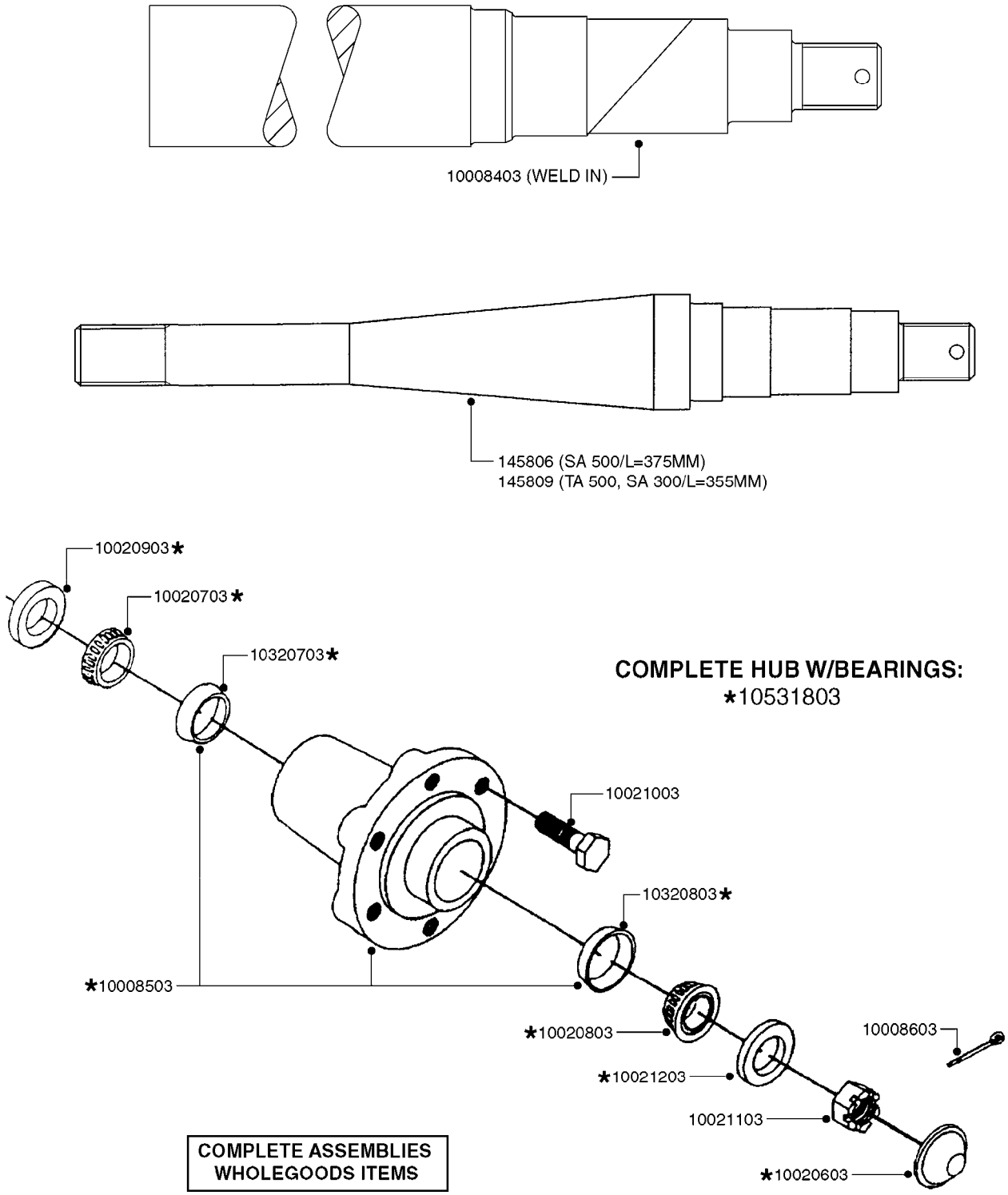

COMPLETE ASSEMBLIES
WHOLEGOODS ITEMS

E0720

Agroparts: www.HARDI-INTERNATIONAL.com

HUB ASSEMBLY F.1-3/4" SPINDLE
E0720-HIN, 11:09:17

Date 12.08.2020 11:39

parts-n°	order qty	description
145806	1	SPINDLE 500 SINGLE
145809	1	SPINDLE 300 SINGLE
10008403	1	SPINDLE ASSY. 1.75x13.25
10008503	1	HUB TR300/500 H611-3 C/W CUPS
10008603	1	COTTER PIN 1/8"X 1-1/2"
10020603	1	DUST CAP DC13
10020703	1	BEARING INNER CORE LM48548
10020803	1	BEARING OUTER CORE LM67048
10020903	1	SEAL OIL CR15190
10021003	1	BOLT HEX 1/2 NF 01.375" WHEEL
10021103	1	NUT HEX NF 7/8 WB32
10021203	1	WASHER PLATE D2"D.937"
10320703	1	BEARING INNER CUP
10320803	1	BEARING OUTER CUP
10531803	1	HUB ASSY.COMP.F.1-3/4" SPINDLE
		DOES NOT INCLUDE WHEEL BOLTS, NUT OR COTTER PIN

HUB ASSEMBLY F.2 1/8" SPINDLE
E0730-HIN, 01:01:16

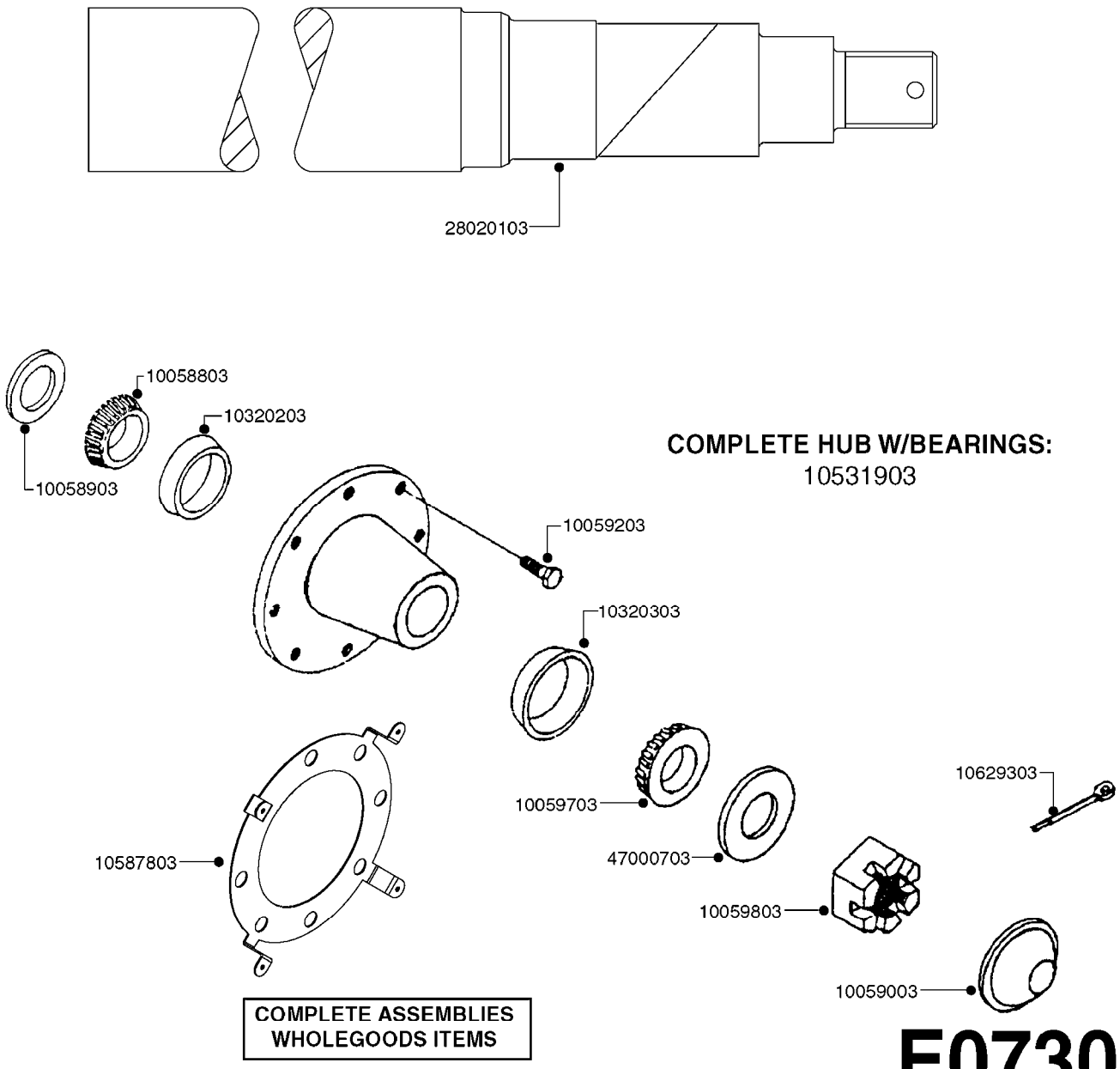

COMPLETE HUB W/BEARINGS:
10531903

COMPLETE ASSEMBLIES WHOLEGOODS ITEMS

E0730

Agroparts: www.HARDI-INTERNATIONAL.com

HUB ASSEMBLY F.2 1/8" SPINDLE
E0730-HIN, 01:01:16

Date 12.08.2020 11:39

parts-n°	order qty	description
10058803	1	BEARING INNER CONE Æ25590
10058903	1	SEAL HUB ÆSE41
10059003	1	DUST CAP 800/1000 GAL ÆDC17
10059203	1	BOLT WHEEL 9/16"x1-1/4"UNF 90D
10059703	1	BEARING OUTER CONE Æ25877
10059803	1	NUT HEX NF 1"
10320203	1	BEARING INNER CUP1000GAL.TR/TA
10320303	1	BEARING OUTER CUP1000GAL.TR/TA
10531903	1	HUB ASSY.COMP.F.2-1/8" SPINDLE
10587803	1	MAG MNT F. SPEED SNS 8 BOLT
10629303	1	PIN, COTTER 3/16" X 2.25" LONG
28020103	1	SPINDLE 2.125 CRS 14" 811
47000703	1	WASHER, SPNDL 1.1" 1.06x2 .19T

HUB ASSEMBLY F.2 3/4" SPINDLE
E0740-HIN, 09:10:19

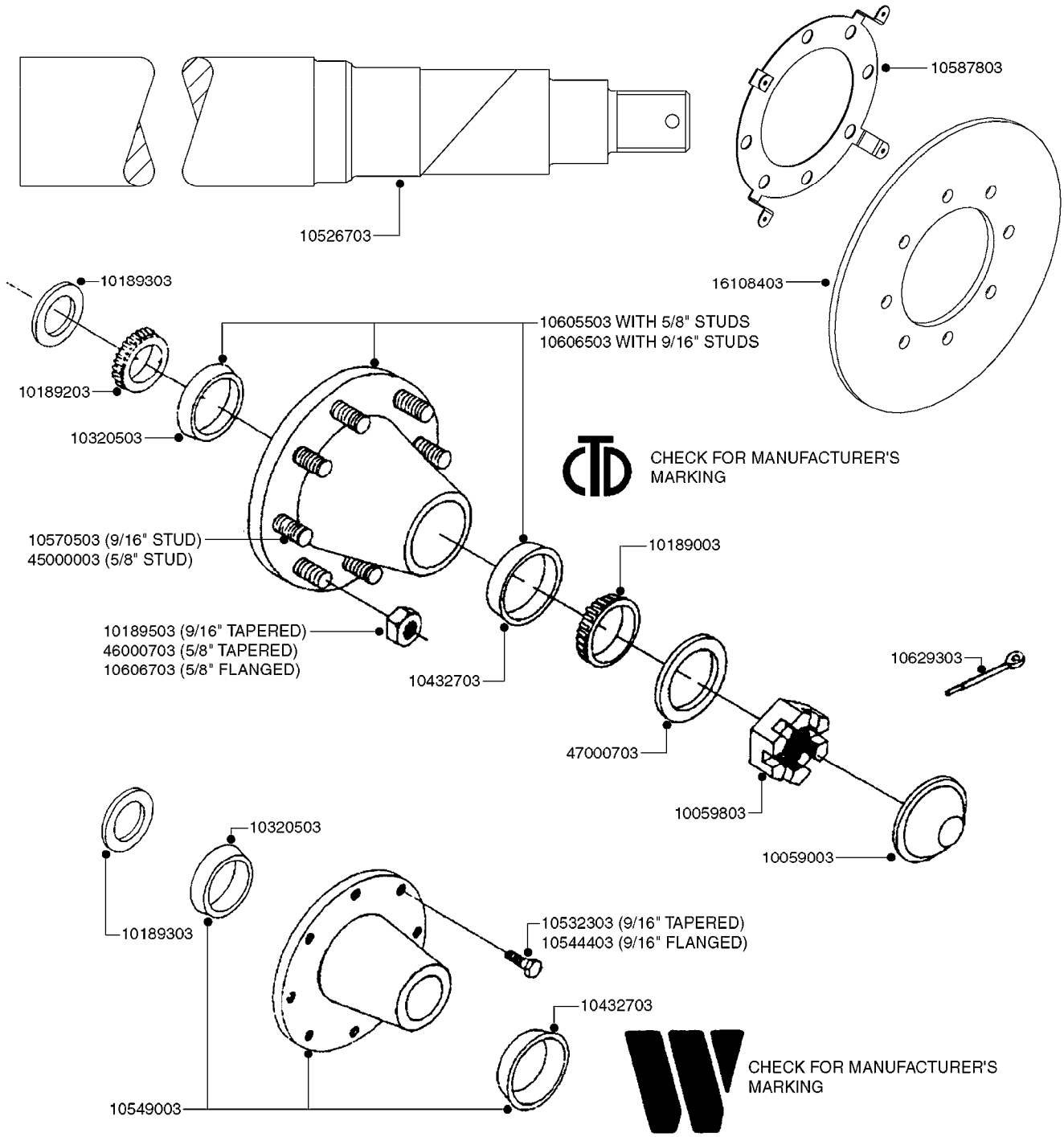

TAPERED NUTS OR BOLTS NEEDED FOR 12.4" X 24" RIMS ONLY

E0740

Agroparts: www.HARDI-INTERNATIONAL.com

HUB ASSEMBLY F.2 3/4" SPINDLE
E0740-HIN, 09:10:19

Date 12.08.2020 11:39

parts-n°	order qty	description
10059003	1	DUST CAP 800/1000 GAL ÆDC17
10059803	1	NUT HEX NF 1"
10189003	1	BEARING OUTER 800/1000 GAL.SA
10189203	1	BEARING INNER CONE 3780
10189303	1	SEAL OIL 800/1000 GAL.SA
10189503	1	NUT HEX NF 9/16 WHEEL STUD
10320503	1	BEARING INNER CUP F. 2-3/4"
10432703	1	BEARING OUTER CUP F. 2.3/4"
10526703	1	SPINDLE 2.75X15.75 W/NUT&WASH
10532303	1	BOLT WHEEL 9/16"UNF X 1-1/2"
10544403	1	BOLT HEX 9/16 NF GR.5 01.25FL
10549003	1	HUB ASSY. RED 2-3/4" W.9/16" THREAD
10570503	1	STUD F. HUB 9/16" x 2-1/4"
10587803	1	MAG MNT F. SPEED SNS 8 BOLT
10605503	1	HUB ASSY F.2-3/4" HUB 5/8"STUD
10606503	1	HUB ASSY.NAV550/800/1000 HC
10606703	1	NUT HEX NF 5/8" FLANGED F.STUD
10629303	1	PIN, COTTER 3/16" X 2.25" LONG
16108403	1	REINFORCEMENT RING 8-8-6 HUB
		FOR NON-REINFORCED 3/8" RIMS ONLY
45000003	1	STUD BOLT 5/8" X 2-1/2"
46000703	1	NUT TAPERED LUG 5/8-18
47000703	1	WASHER, SPNDL 1.1" 1.06x2 .19T

HUB ASSY F. 3" SPINDLE CM750
E0750-HIN, 01:01:16

Date 12.08.2020 11:39

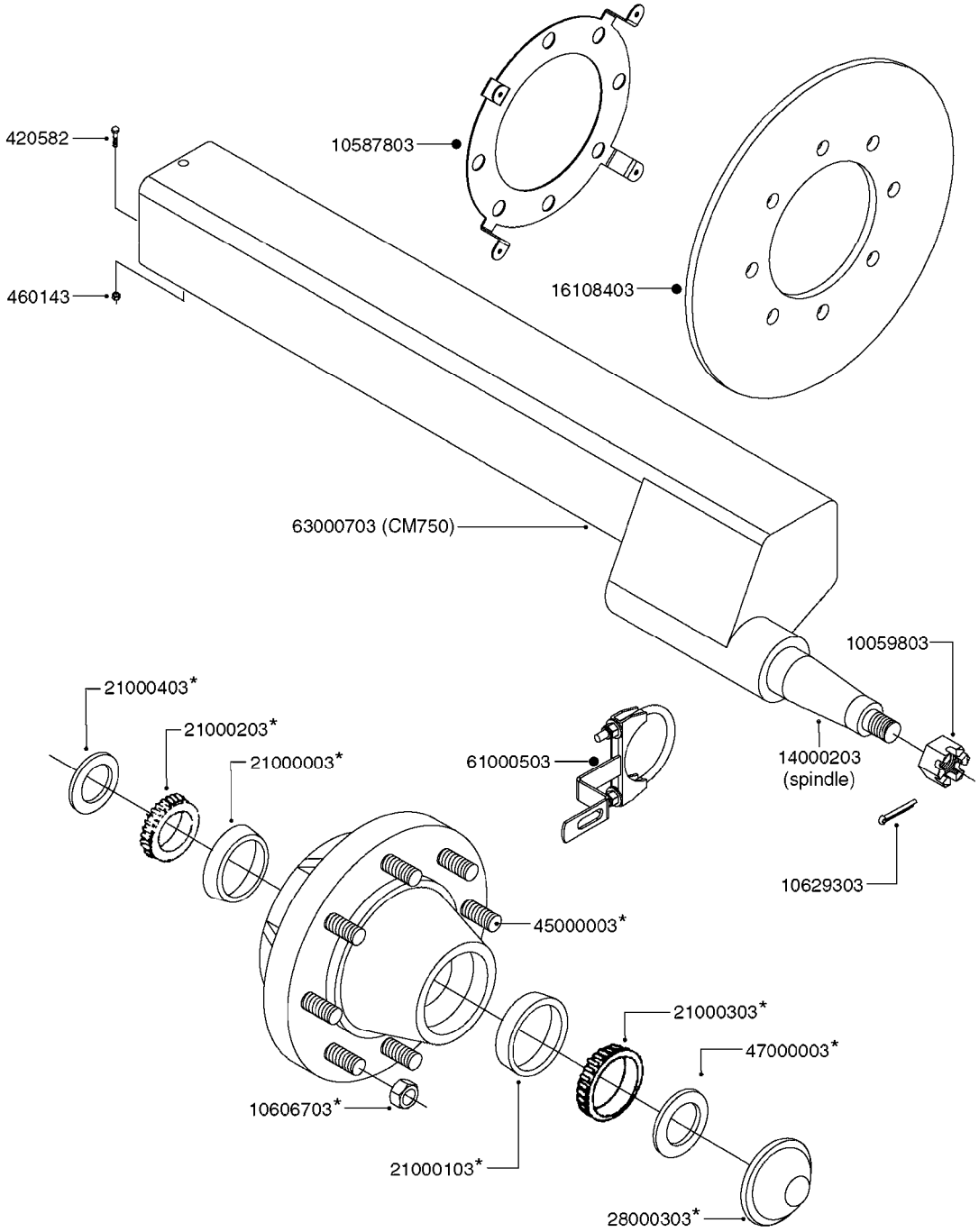

*28050103 - COMPLETE HUB ASSEMBLY

COMPLETE ASSEMBLIES
WHOLEGOODS ITEMS

E0750

Agroparts: www.HARDI-INTERNATIONAL.com

HUB ASSY F. 3" SPINDLE CM750
E0750-HIN, 01:01:16

Date 12.08.2020 11:39

parts-n°	order qty	description
420582	1	BOLT HEX 8.8 DEL M8X20 FT A2
460143	1	LOCK NUT M8 SST A2 DIN985
10059803	1	NUT HEX NF 1"
10587803	1	MAG MNT F. SPEED SNS 8 BOLT
10606703	1	NUT HEX NF 5/8" FLANGED F.STUD
10629303	1	PIN, COTTER 3/16" X 2.25" LONG
14000203	1	SPINDLE 3" X 16" W/NUT &WASHER
16108403	1	REINFORCEMENT RING 8-8-6 HUB FOR NON-REINFORCED 3/8" RIMS ONLY
21000003	1	BEARING INNER CUP #382A
21000103	1	BEARING OUTER CUP #LM501310
21000203	1	BEARING INNER CONE #387AS
21000303	1	BEARING OUTER CONE #LM501349
21000403	1	SEAL GREASE #CR29968
28000303	1	DUST CAP #1609
28050103	1	HUB F 3" 758 7500# PACKAGE
45000003	1	STUD BOLT 5/8" X 2-1/2"
47000003	1	WASHER SPNDL 3" 1.12X2.1 .25TK
61000503	1	SPEED SNS MNT CLAMP - 3"
63000703	1	AXLE INSERT W/M CM750

HUB ASSY 3" SPINDLE NAV 575
E0760-HIN, 01:01:16

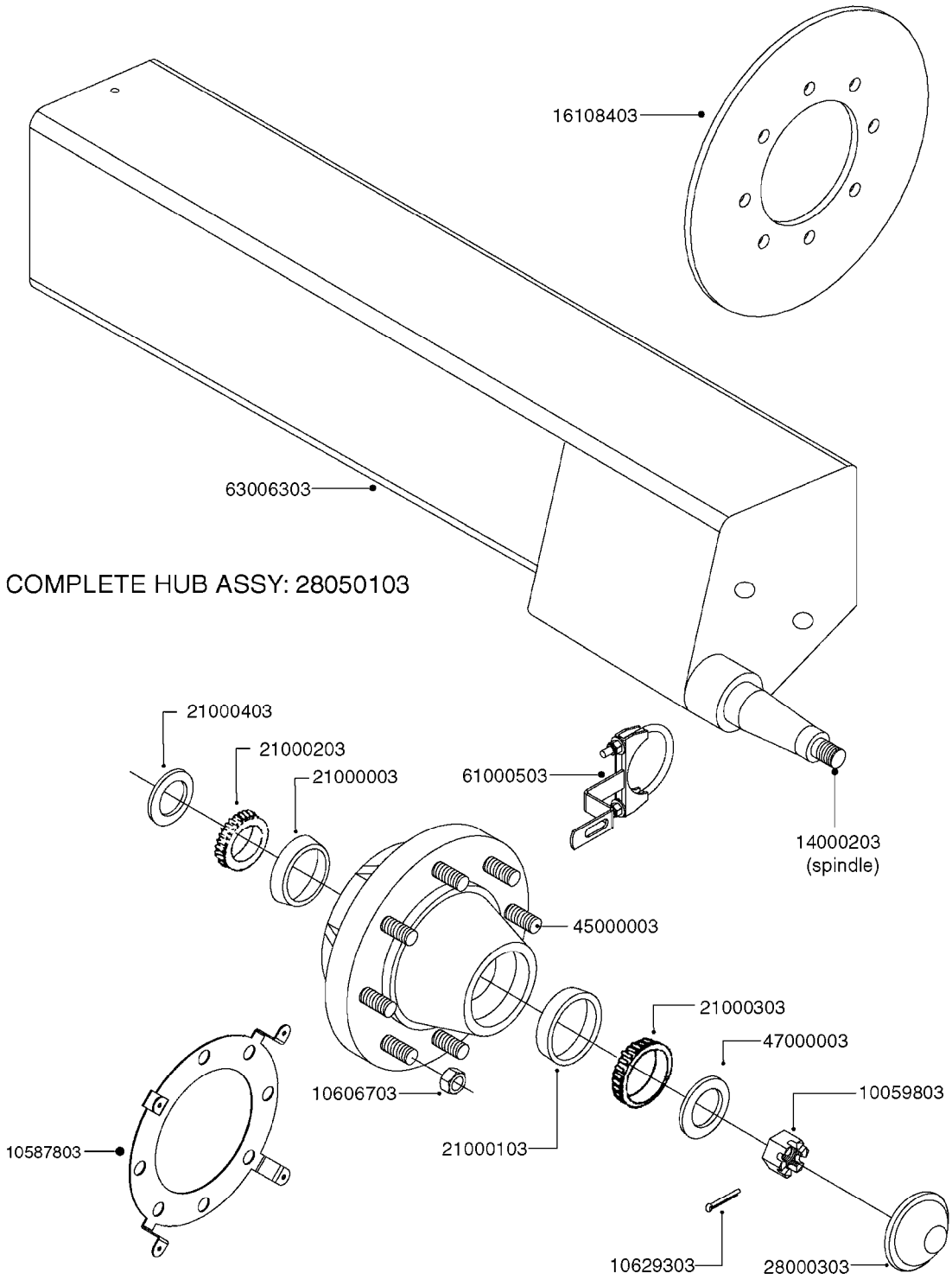

E0760

Agroparts: www.HARDI-INTERNATIONAL.com

HUB ASSY 3" SPINDLE NAV 575
E0760-HIN, 01:01:16

Date 12.08.2020 11:39

parts-n°	order qty	description
10059803	1	NUT HEX NF 1"
10587803	1	MAG MNT F. SPEED SNS 8 BOLT
10606703	1	NUT HEX NF 5/8" FLANGED F.STUD
10629303	1	PIN, COTTER 3/16" X 2.25" LONG
14000203	1	SPINDLE 3" X 16" W/NUT &WASHER
16108403	1	REINFORCEMENT RING 8-8-6 HUB
		FOR NON-REINFORCED 3/8" RIMS ONLY
21000003	1	BEARING INNER CUP #382A
21000103	1	BEARING OUTER CUP #LM501310
21000203	1	BEARING INNER CONE #387AS
21000303	1	BEARING OUTER CONE #LM501349
21000403	1	SEAL GREASE #CR29968
28000303	1	DUST CAP #1609
28050103	1	HUB F 3" 758 7500# PACKAGE
45000003	1	STUD BOLT 5/8" X 2-1/2"
47000003	1	WASHER SPNDL 3" 1.12X2.1 .25TK
61000503	1	SPEED SNS MNT CLAMP - 3"
63006303	1	AXLE INSERT W/M SUS. 575 NAV

	Agroparts: www.HARDI-INTERNATIONAL.com	
HARDI	HUB ASSEMBLY F.3-1/8" SPINDLE E0770-HIN, 01:01:16	Page 0 Date 12.08.2020 11:39

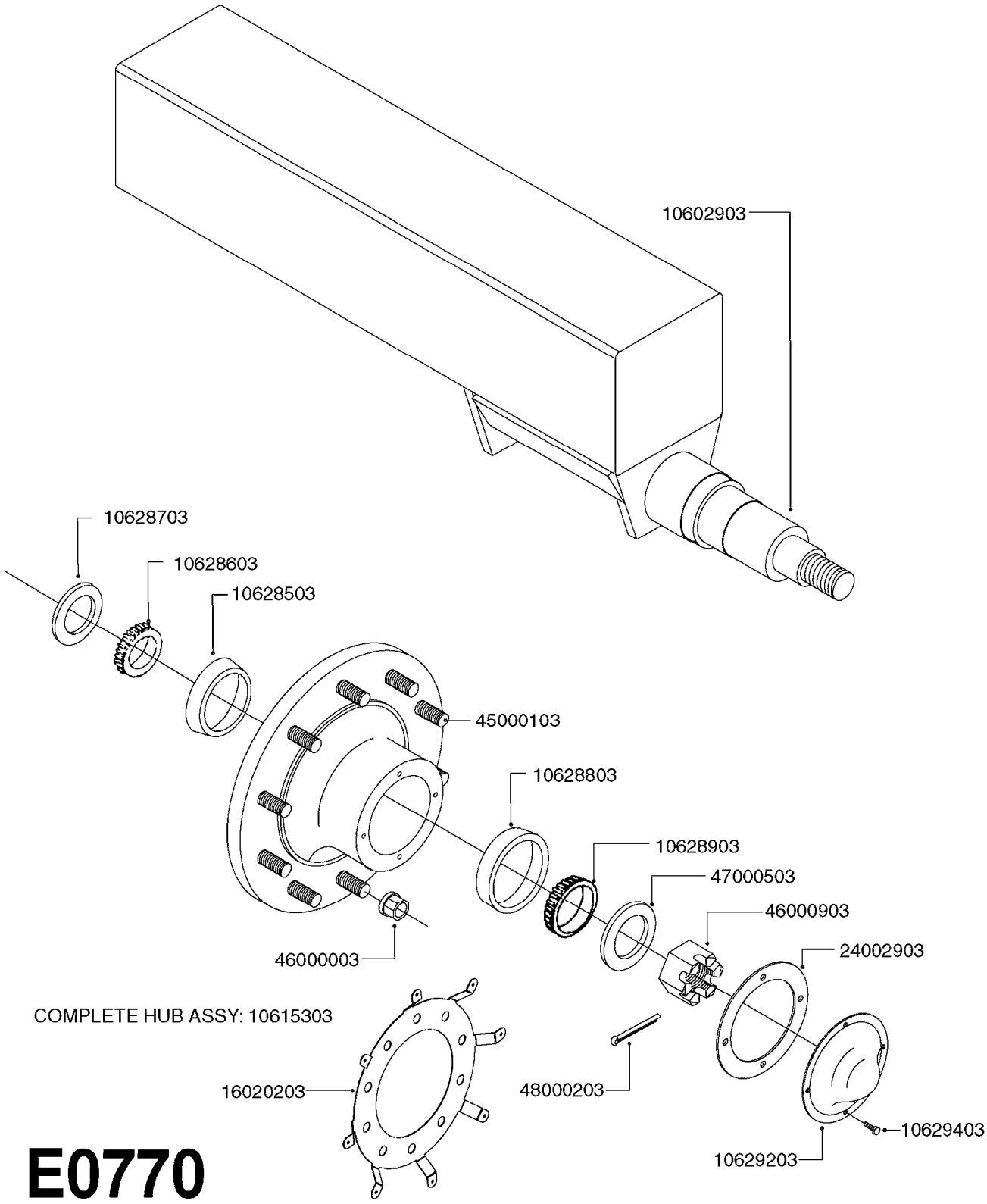

E0770

Agroparts: www.HARDI-INTERNATIONAL.com

HUB ASSEMBLY F.3-1/8" SPINDLE
E0770-HIN, 01:01:16

Date 12.08.2020 11:39

parts-n°	order qty	description
10602903	1	SPINDLE 3-1/8" WILTON 2813180
10615303	1	HUB ASSY.F.3-1/8" SPINDLE COMP
10628503	1	BEARING INNER CUP Æ39520
10628603	1	BEARING INNER CONE Æ39585
10628703	1	SEAL OIL 3.0" X 4.5" X .438"
10628803	1	BEARING OUTER CUP #453A
10628903	1	BEARING INNER CONE Æ460
10629203	1	DUST CAP F.10 BOLT HUB 3.5"
10629403	1	BOLT HEX 5/16 NC GR.2 00.50"
16020203	1	WHEEL SENSOR MAGNET MNT 10BLT
24002903	1	GASKET F. HUB 3.5" HUB ASSY
45000103	1	BOLT, WHEEL STUD 3/4-16X2 3/4
46000003	1	NUT HEX NF 3/4" FLANGED F.HUB
46000903	1	NUT CSTL 1-1/4"NF 3-1/2" SPNDL
47000503	1	WASHER, SPNDL 3.5" 1.31x3 .16T
48000203	1	PIN, COTTER 7/32" X 3.00"

	Agroparts: www.HARDI-INTERNATIONAL.com	
HARDI	HUB ASSEMBLY F.3-1/2" SPINDLE E0780-HIN, 01:01:16	Page 0 Date 12.08.2020 11:39

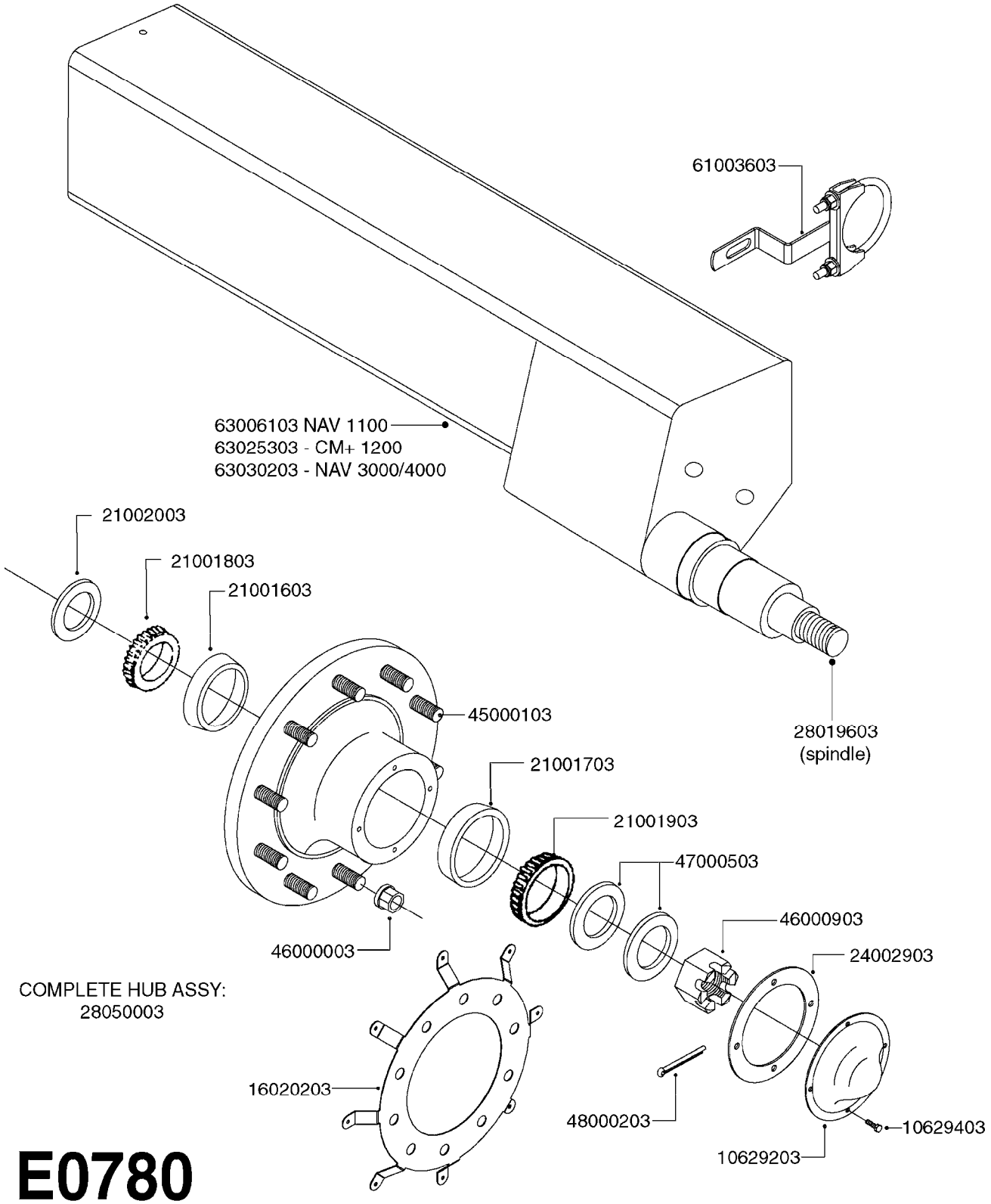

COMPLETE HUB ASSY:
28050003

E0780

Agroparts: www.HARDI-INTERNATIONAL.com

HUB ASSEMBLY F.3-1/2" SPINDLE
E0780-HIN, 01:01:16

Date 12.08.2020 11:39

parts-n°	order qty	description
10629203	1	DUST CAP F.10 BOLT HUB 3.5"
10629403	1	BOLT HEX 5/16 NC GR.2 00.50"
16020203	1	WHEEL SENSOR MAGNET MNT 10BLT
21001603	1	BEARING INN CUP 873 HUB 33462
21001703	1	BEARING OUT CUP 873 HUB 453A
21001803	1	BEARING INN CONE 873 HUB 33275
21001903	1	BEARING OUT CONE 873 HUB 460
21002003	1	SEAL GREASE P602127
24002903	1	GASKET F. HUB 3.5" HUB ASSY
28019603	1	SPINDLE, 3.50 X 17.375 CRS
28050003	1	HUB F 3.5" 873 15000# PACKAGE
45000103	1	BOLT, WHEEL STUD 3/4-16X2 3/4
46000003	1	NUT HEX NF 3/4" FLANGED F.HUB
46000903	1	NUT CSTL 1-1/4"NF 3-1/2" SPNDL
47000503	1	WASHER, SPNDL 3.5" 1.31x3 .16T
48000203	1	PIN, COTTER 7/32" X 3.00"
61003603	1	SPEED SNS MNT CLAMP 3.5" SP
63006103	1	AXLE INSERT W/M NAV. 1100
63025303	1	AXLE INSRT CM+1200W.SPDL 71-82
63030203	1	AXLE ADJ 60-120 INSERT NAV DBL

HUB ASSEMBLY F.4-1/2" SPINDLE
E0790-HIN, 06:07:17

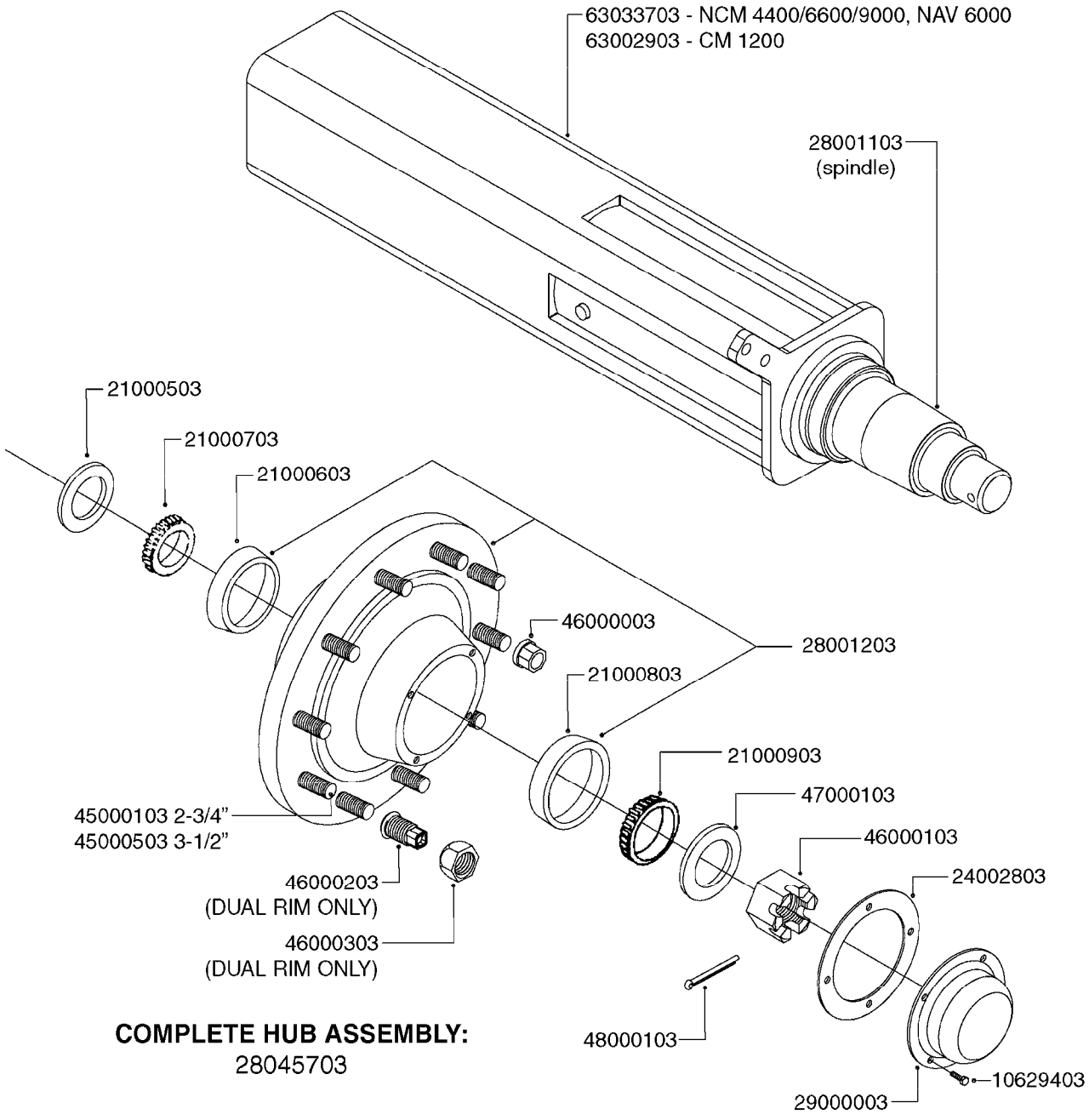

COMPLETE HUB ASSEMBLY:
28045703

COMPLETE ASSEMBLIES
WHOLEGOODS ITEMS

E0790

Agroparts: www.HARDI-INTERNATIONAL.com

HUB ASSEMBLY F.4-1/2" SPINDLE
E0790-HIN, 06:07:17

Date 12.08.2020 11:39

parts-n°	order qty	description
10629403	1	BOLT HEX 5/16 NC GR.2 00.50"
21000503	1	SEAL,WHEEL CR43771
21000603	1	RACE, BEARING 3.5/1.5
21000703	1	BEARING, TAPPERED 3.5433/1.575
21000803	1	RACE, TAPERED BEARING
21000903	1	BEARING, TAPPERED, 2.75/1.510
24002803	1	GASKET F. HUB 4.5" HUB ASSY
28001103	1	SPINDLE 4.5"x 23" 20000LB
28001203	1	HUB, 20000LB W. BRG RACES
28045703	1	HUB ASSY 10-13.19-11.02 25000#
29000003	1	HUB CAP F. 881(20000LB) HUB
45000103	1	BOLT, WHEEL STUD 3/4-16X2 3/4
45000503	1	BOLT, WHEEL STUD 3/4-16X3 1/2
46000003	1	NUT HEX NF 3/4" FLANGED F.HUB
46000103	1	NUT, CASTLE, SPINDLE 2-12 UNF
46000203	1	NUT, BUD WHEEL, INNER, RH
46000303	1	NUT, BUD WHEEL, OUTER, RH
47000103	1	WASHER, SPNDL 4.5" 2.06x4 .25T
48000103	1	PIN, COTTER 5/16" X 5.25"
63002903	1	AXLE INSERT,72"-90"SUS CM 1200
63033703	1	AXLE INSERT NCM 44/66/9000

CAMOPLAST TRACK 30 SERIES
E0800-HIN, 01:01:16

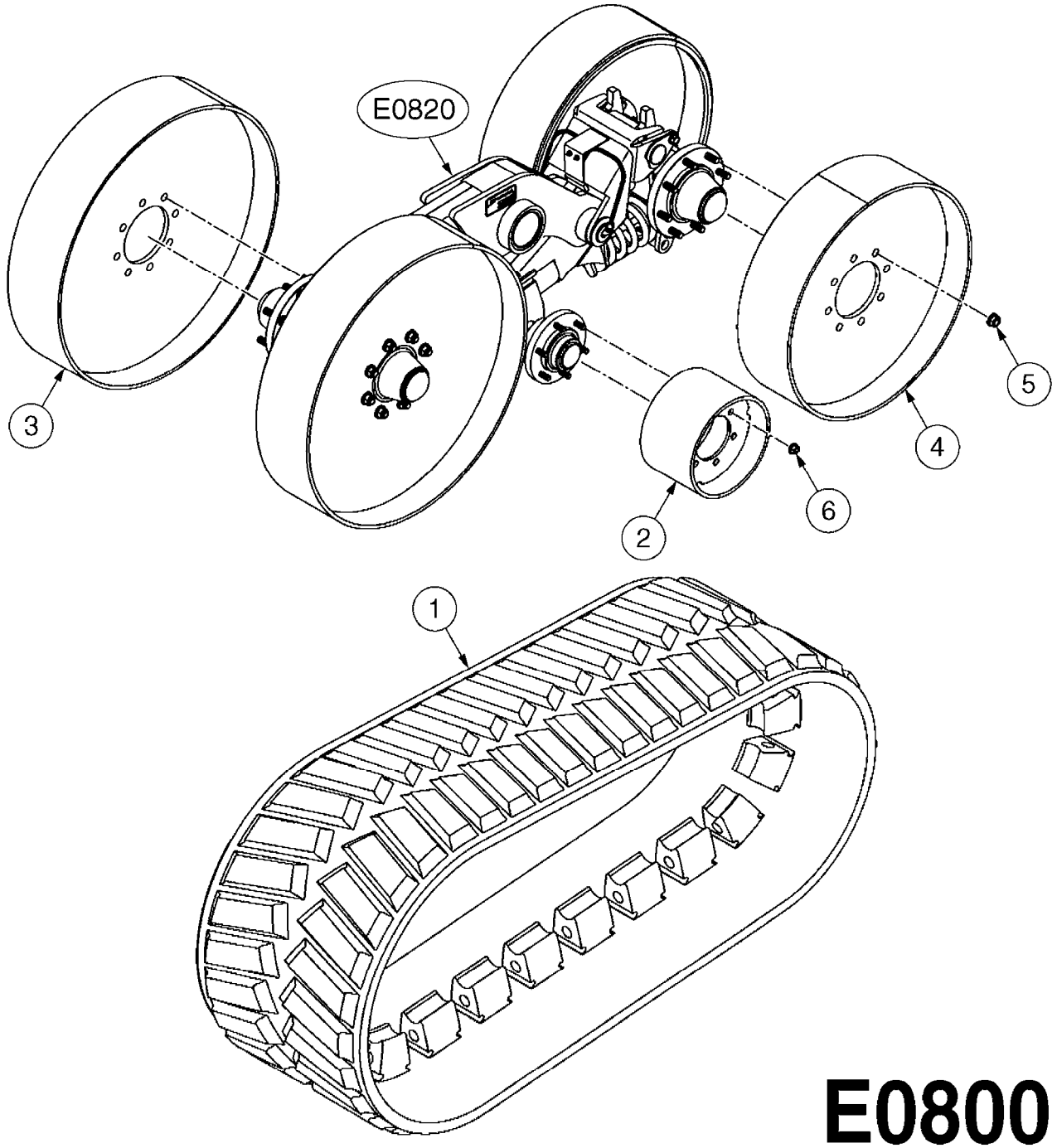

E0800

Agroparts: www.HARDI-INTERNATIONAL.com

CAMOPLAST TRACK 30 SERIES
E0800-HIN, 01:01:16

Date 12.08.2020 11:39

Pos.	parts-nº	order qty	description
1	28063903	1	TRACK LH 187" X 14" (30-1401)
1	28064003	1	TRACK RH 187" X 14" (30-1401)
1	28073903	1	TRACK LH 187" X 16" (30-1601)
1	28074203	1	TRACK RH 187" X 16" (30-1601)
2	28064103	1	WHEEL, MID-ROLLER (1401,1402)
2	28064203	1	WHEEL, MID-ROLLER(45-1801)
3	28074303	1	WHEEL, IDLER, FRONT (30-1401)
3	28074403	1	WHEEL, IDLER, FRONT (30-1601)
4	28074503	1	WHEEL, IDLER, REAR (30-1401)
4	28074603	1	WHEEL, IDLER, REAR (30-1601)
5	28082103	1	LUG NUT SET (8) IDLER
6	28083003	1	LUG NUT SET (6) MID-ROLLER

CAMOPLAST TRACK 40 SERIES
E0810-HIN, 01:01:16

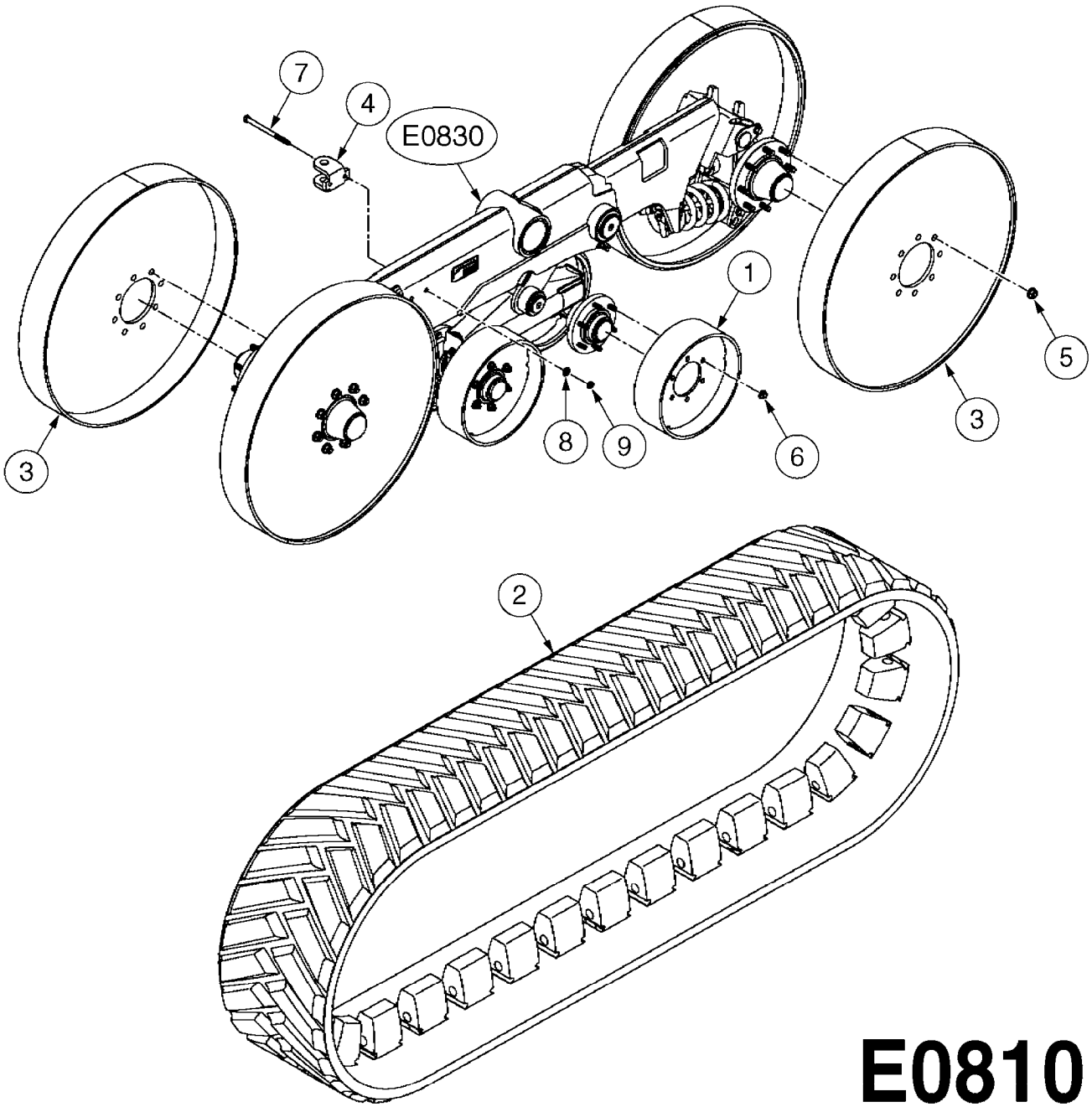

E0810

CAMOPLAST TRACK 40 SERIES
E0810-HIN, 01:01:16

Date 12.08.2020 11:39

Pos.	parts-nº	order qty	description
1	28064103	1	WHEEL, MID-ROLLER (1401,1402)
1	28064203	1	WHEEL, MID-ROLLER(45-1801)
2	28074703	1	TRACK LH 249" X 14" (40-1402)
2	28074803	1	TRACK RH 249" X 14" (40-1402)
2	28075103	1	TRACK 249" X 18" (45-1801)
3	28075203	1	WHEEL, IDLER (40-1402)
3	28075303	1	WHEEL, IDLER (45-1801)
4	28075403	1	BRACE BRACKET
5	28082103	1	LUG NUT SET (8) IDLER
6	28083003	1	LUG NUT SET (6) MID-ROLLER
7	28083203	1	BOLT HEX 7"X1/2"-20 UNF GR 8
8	28083303	1	WASHER 1/2"
9	28083403	1	LOCK NUT 1/2"-20 UNF

HARDI	**Agroparts: www.HARDI-INTERNATIONAL.com**	
	CAMOPLAST SPEED SENSOR E0815-HIN, 21:08:19	Page 0
		Date 12.08.2020 11:39

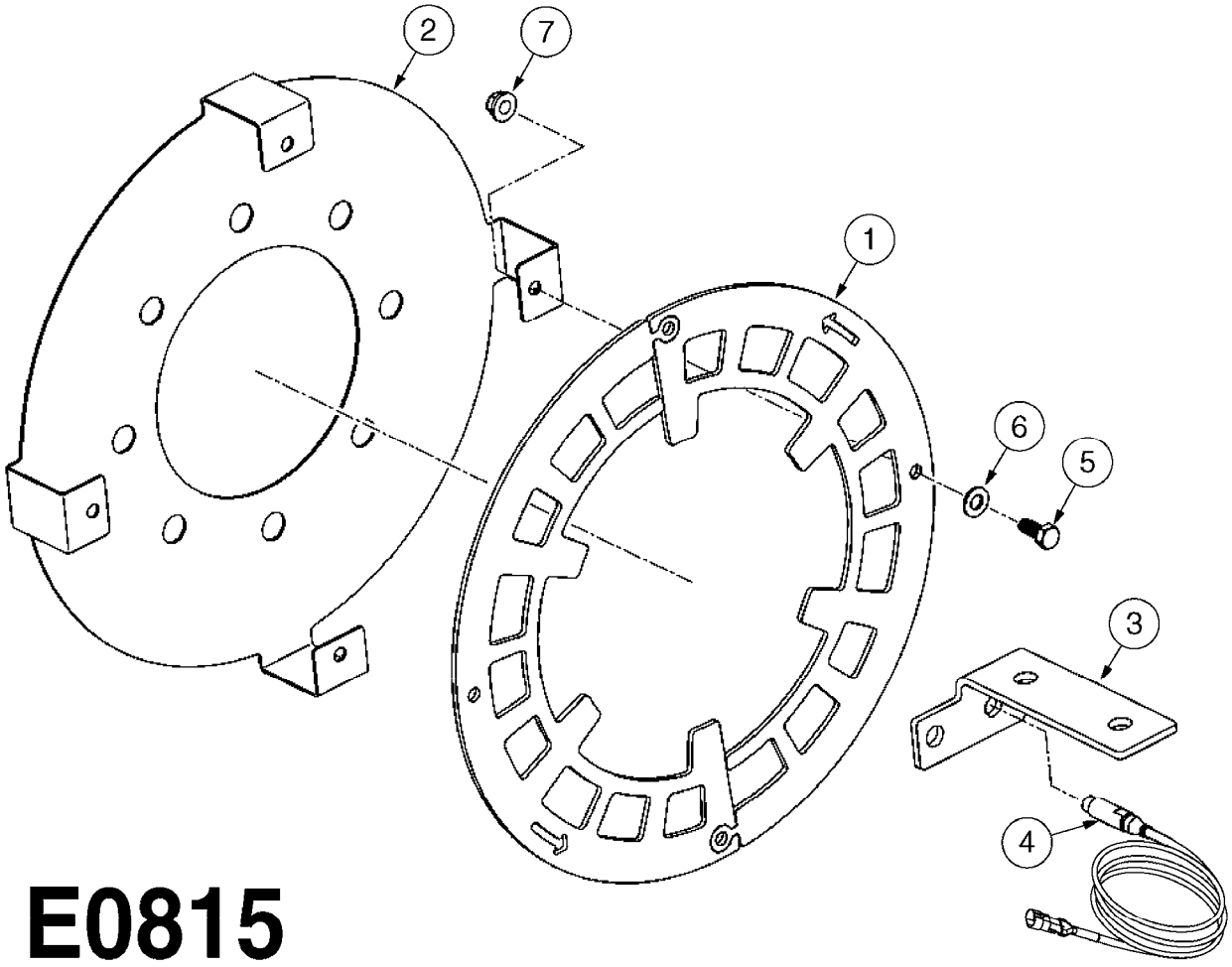

E0815

Agroparts: www.HARDI-INTERNATIONAL.com

CAMOPLAST SPEED SENSOR
E0815-HIN, 21:08:19

Date 12.08.2020 11:39

Pos.	parts-nº	order qty	description
1	28110603	1	SPEED SENSOR RING, CAMOPLAST
2	28110703	1	SPEED RING MOUNT BKT. CAMOPLAST
3	28110803	1	SPEED SENSOR BKT. CAMOPLAST
4	28110903	1	SPEED SENSOR CAMOPLAST
5	28111003	1	BOLT, HEX 5/16" X 3/4"
6	28111103	1	WASHER, FLAT 5/16"
7	28111203	1	NUT, LOCK 5/16" FLANGED

HARDI	**Agroparts: www.HARDI-INTERNATIONAL.com**	
	CAMOPLAST FRAME 30 SERIES E0820-HIN, 01:01:16	Page 0 Date 12.08.2020 11:39

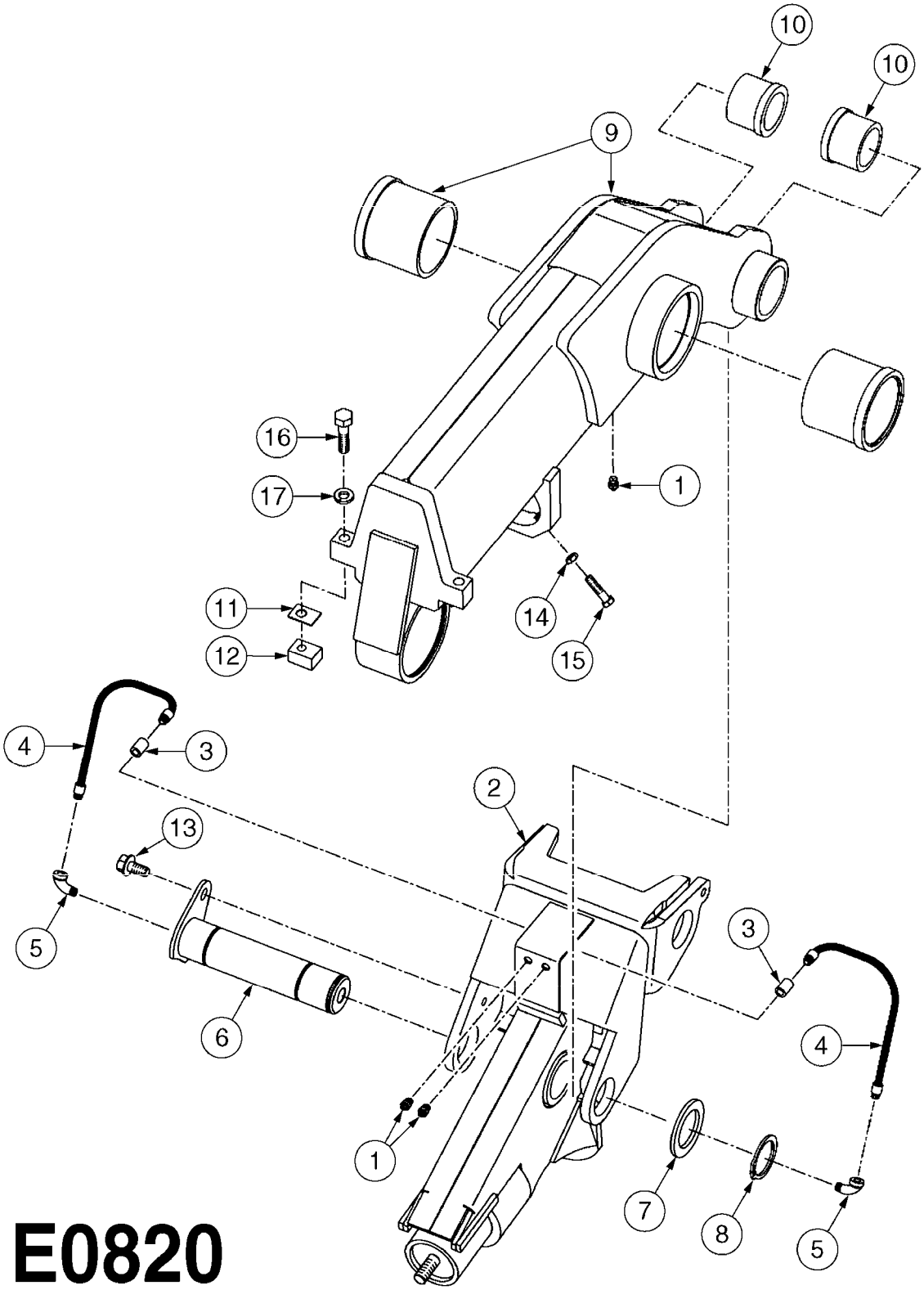

E0820

Agroparts: www.HARDI-INTERNATIONAL.com

CAMOPLAST FRAME 30 SERIES
E0820-HIN, 01:01:16

Date 12.08.2020 11:39

Pos.	parts-n°	order qty	description
1	10308103	1	GREASE NIPPLE 1/8 NPT
2	28075503	1	TENSION ARM (30-1401,1601)
3	28075603	1	COUPLING, 1/8" NPT
4	28075703	1	HOSE, 12" X 1/8" NPT
5	28075803	1	ELBOW, 90°, 1/8" NPT M-F
6	28075903	1	PIN, PIVOT (30-1401,1601)
7	28076003	1	WASHER,3"X2.02"X3/16"
8	28076103	1	SNAP RING EXT. 2"
9	28076203	1	FRAME W/BUSHINGS(30-1401,1601)
10	28076303	1	BUSHING 2.55"ODX2.012ID"X2"
11	28076403	1	SHIM, TILT STOPPER
12	28076503	1	STOPPER, TILT
13	28083503	1	BOLT HEX FLG.1"X1/2"-13UNC GR5
14	28083603	1	JAM NUT 3/8"-16 UNC GR 8
15	28083703	1	SET SCREW 1-1/2"X3/8"-16 UNC
16	28083803	1	BOLT HEX 2"X1/2"-13 UNC
17	28083903	1	LOCK WASHER 1/2"

	Agroparts: www.HARDI-INTERNATIONAL.com	
HARDI	CAMOPLAST FRAME 40 SERIES E0830-HIN, 01:01:16	Page 0 Date 12.08.2020 11:39

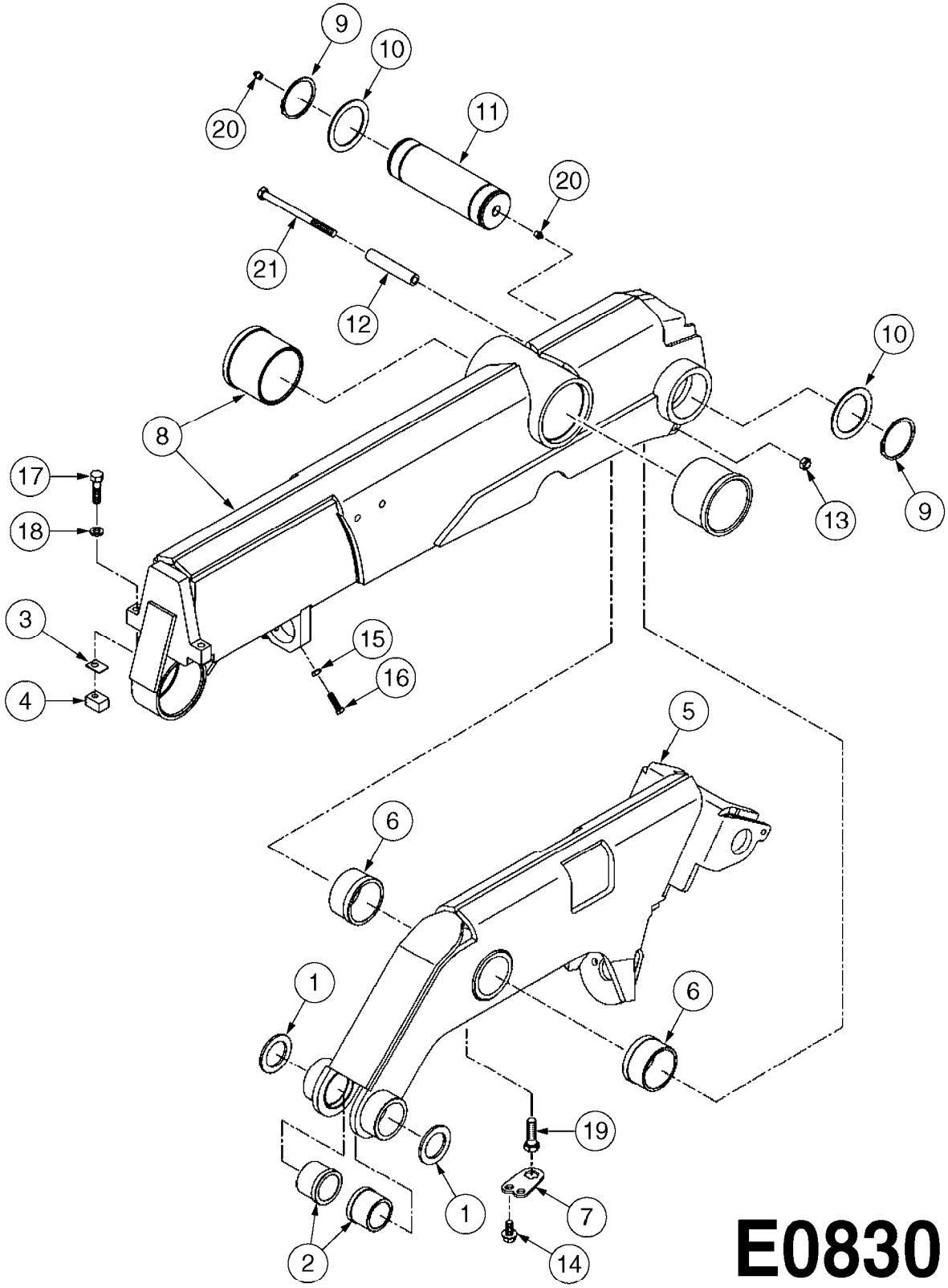

Agroparts: www.HARDI-INTERNATIONAL.com

CAMOPLAST FRAME 40 SERIES
E0830-HIN, 01:01:16

Date 12.08.2020 11:39

Pos.	parts-n°	order qty	description
1	28076003	1	WASHER,3"X2.02"X3/16"
2	28076303	1	BUSHING 2.55"ODX2.012ID"X2"
3	28076403	1	SHIM, TILT STOPPER
4	28076503	1	STOPPER, TILT
5	28076603	1	TENSION ARM (40 SERIES)
6	28076703	1	BUSHING, TENS. 3.48X3.15X1.98"
7	28076803	1	LOCK PLATE
8	28076903	1	FRAME W/BUSHINGS (40 SERIES)
9	28077003	1	SNAP RING EXT. 3"
10	28077103	1	WASHER
11	28077203	1	PIN, 3" OD X 9.56"
12	28077303	1	SPACER
13	28083403	1	LOCK NUT 1/2"-20 UNF
14	28083503	1	BOLT HEX FLG.1"X1/2"-13UNC GR5
15	28083603	1	JAM NUT 3/8"-16 UNC GR 8
16	28083703	1	SET SCREW 1-1/2"X3/8"-16 UNC
17	28083803	1	BOLT HEX 2"X1/2"-13 UNC
18	28083903	1	LOCK WASHER 1/2"
19	28084003	1	BOLT HEX 2" X 5/8"-11
20	28084103	1	GREASE FITTING
21	28084203	1	BOLT HEX 6-1/2"X1/2"-20UNF GR8

HARDI	**Agroparts: www.HARDI-INTERNATIONAL.com**	
	CAMOPLAST TENSION LINK ASSY. E0840-HIN, 01:01:16	Page 0
		Date 12.08.2020 11:39

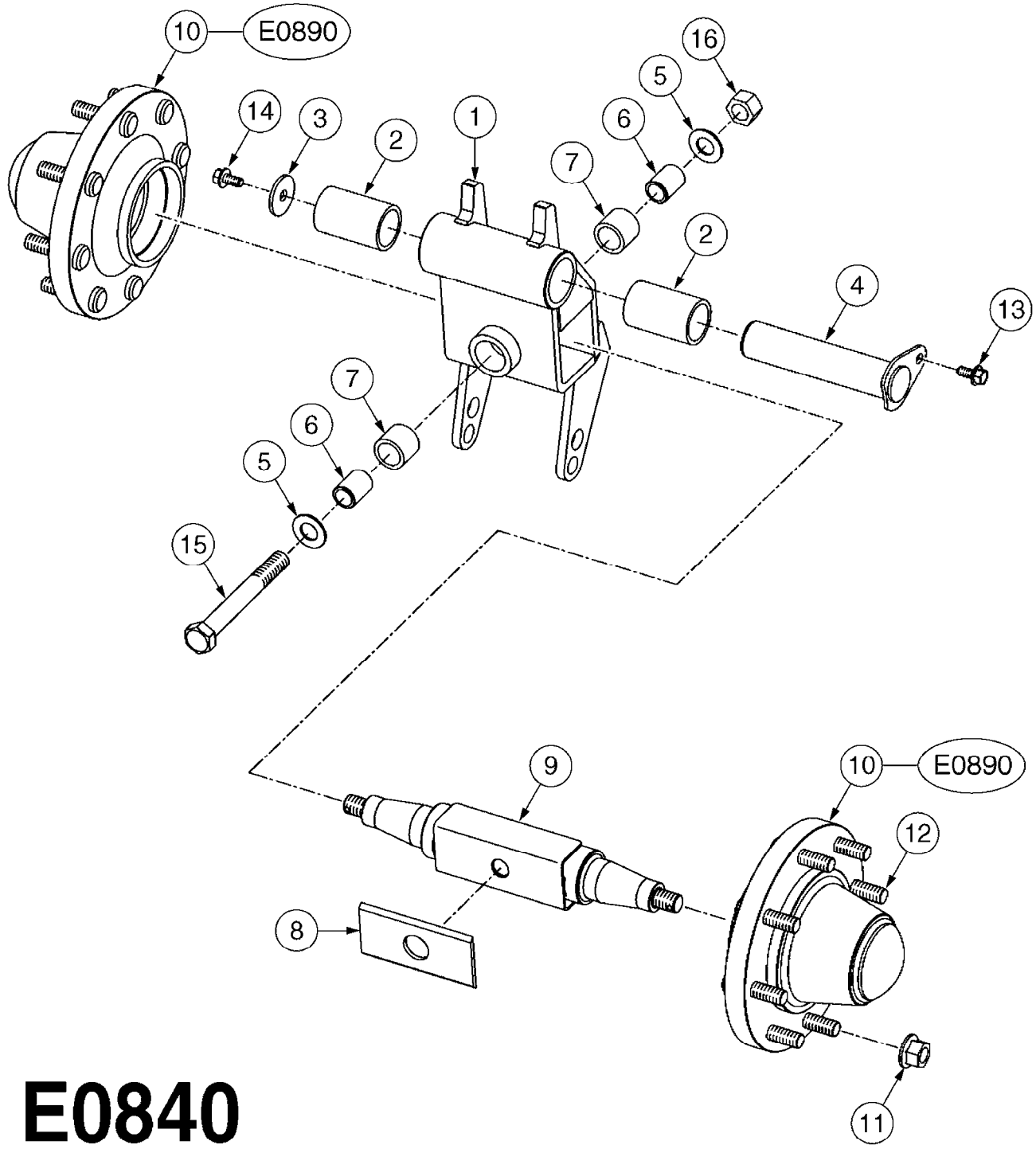

E0840

Agroparts: www.HARDI-INTERNATIONAL.com

CAMOPLAST TENSION LINK ASSY.
E0840-HIN, 01:01:16

Date 12.08.2020 11:39

Pos.	parts-nº	order qty	description
1	28077403	1	TENSION LINK
2	28077503	1	BUSHING 2.5"ODX0.25"WX3.94"
3	28077603	1	RETAINER PLATE
4	28077703	1	PIN
5	28077803	1	WASHER 1.062"ID X 2"OD
6	28077903	1	BUSHING 1.375" X 1.88" LG
7	28078003	1	BUSHING 1.875"ODX0.25"WTX1.55"
8	28078103	1	WEAR PAD
9	28078203	1	AXLE
10	28078303	1	HUB ASSY.IDLER, G60-8
			HUB COMPLETE W/LUG NUTS
11	28082103	1	LUG NUT SET (8) IDLER
12	28082203	1	WHEEL STUD SET (8) IDLER
13	28083503	1	BOLT HEX FLG.1"X1/2"-13UNC GR5
14	28084303	1	BOLT HEX FLG.1"X5/8"-11UNC GR8
15	28084403	1	BOLT HEX 8"X1"-8 UNC
16	28084503	1	NUT 1"-8 UNC GR 8

HARDI	**Agroparts: www.HARDI-INTERNATIONAL.com**	
	CAMOPLAST TENSIONER ASSEMBLY E0850-HIN, 01:01:16	Page 0
		Date 12.08.2020 11:39

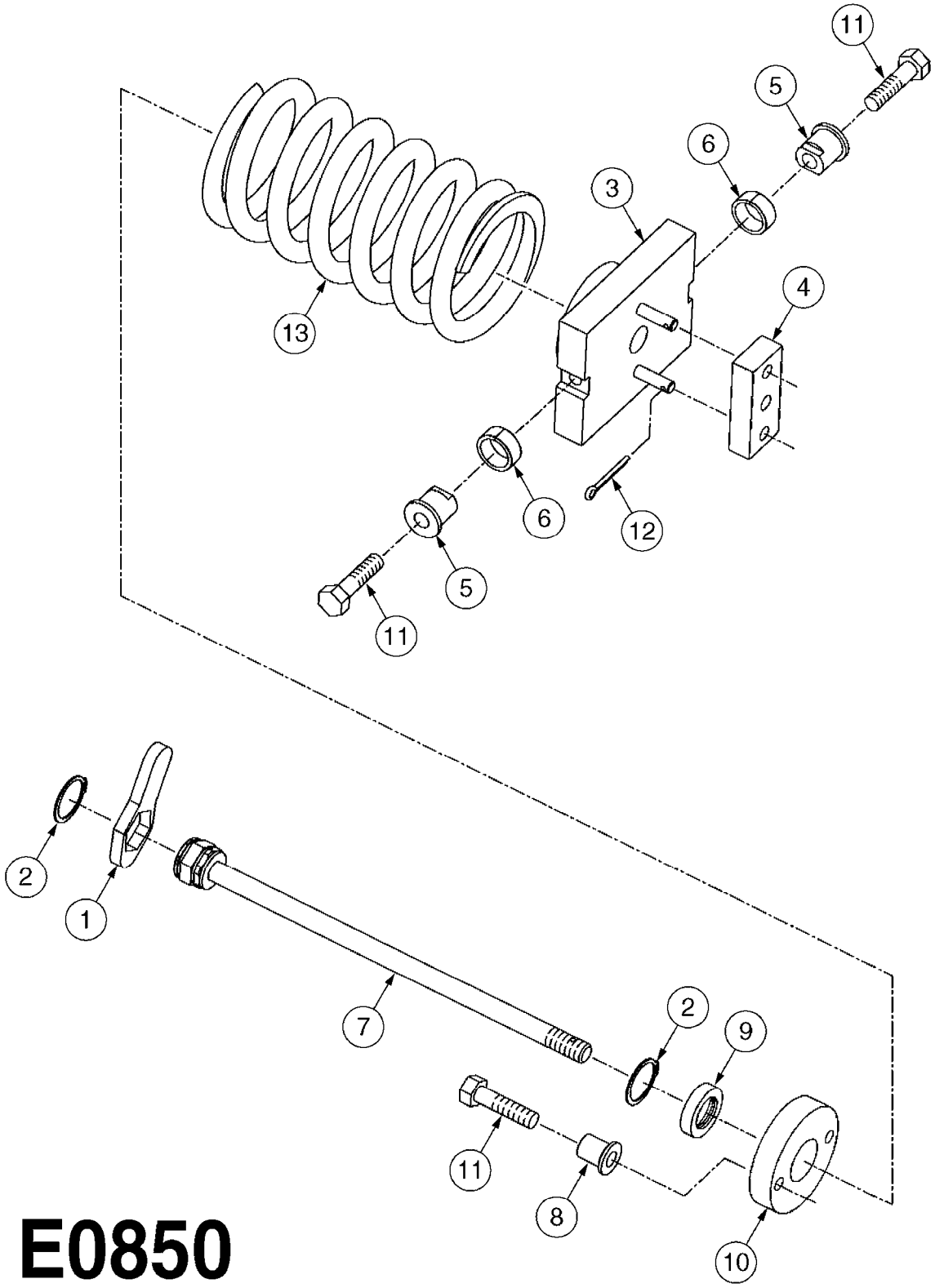

E0850

Agroparts: www.HARDI-INTERNATIONAL.com

CAMOPLAST TENSIONER ASSEMBLY
E0850-HIN, 01:01:16

Date 12.08.2020 11:39

Pos.	parts-nº	order qty	description
1	28074003	1	LOCK PLATE
2	28074103	1	SNAP RING
3	28078403	1	SPRING MOUNT
4	28078503	1	RETAINER PLATE
5	28078603	1	SLEEVE W/NOTCH
6	28078703	1	BUSHING 1/2"X1-1/4"ODX1"ID
7	28078803	1	ACME SCREW
8	28078903	1	SLEEVE,EXTEN.1"X1/2"IDX1.04"OD
9	28079003	1	SEAT, WASHER
10	28079103	1	SPRING PILOT
11	28083803	1	BOLT HEX 2"X1/2"-13 UNC
12	28084603	1	COTTER PIN 1-1/4" X 5/32"
13	28085103	1	SPRING
			SPRING FOR 30 SERIES
13	28085203	1	SPRING 9" X 5" X 3/4"
			SPRING FOR 40 SERIES

	Agroparts: www.HARDI-INTERNATIONAL.com	
HARDI	CAMOPLAST ALIGNMENT ASSEMBLY E0860-HIN, 01:01:16	Page 0 Date 12.08.2020 11:39

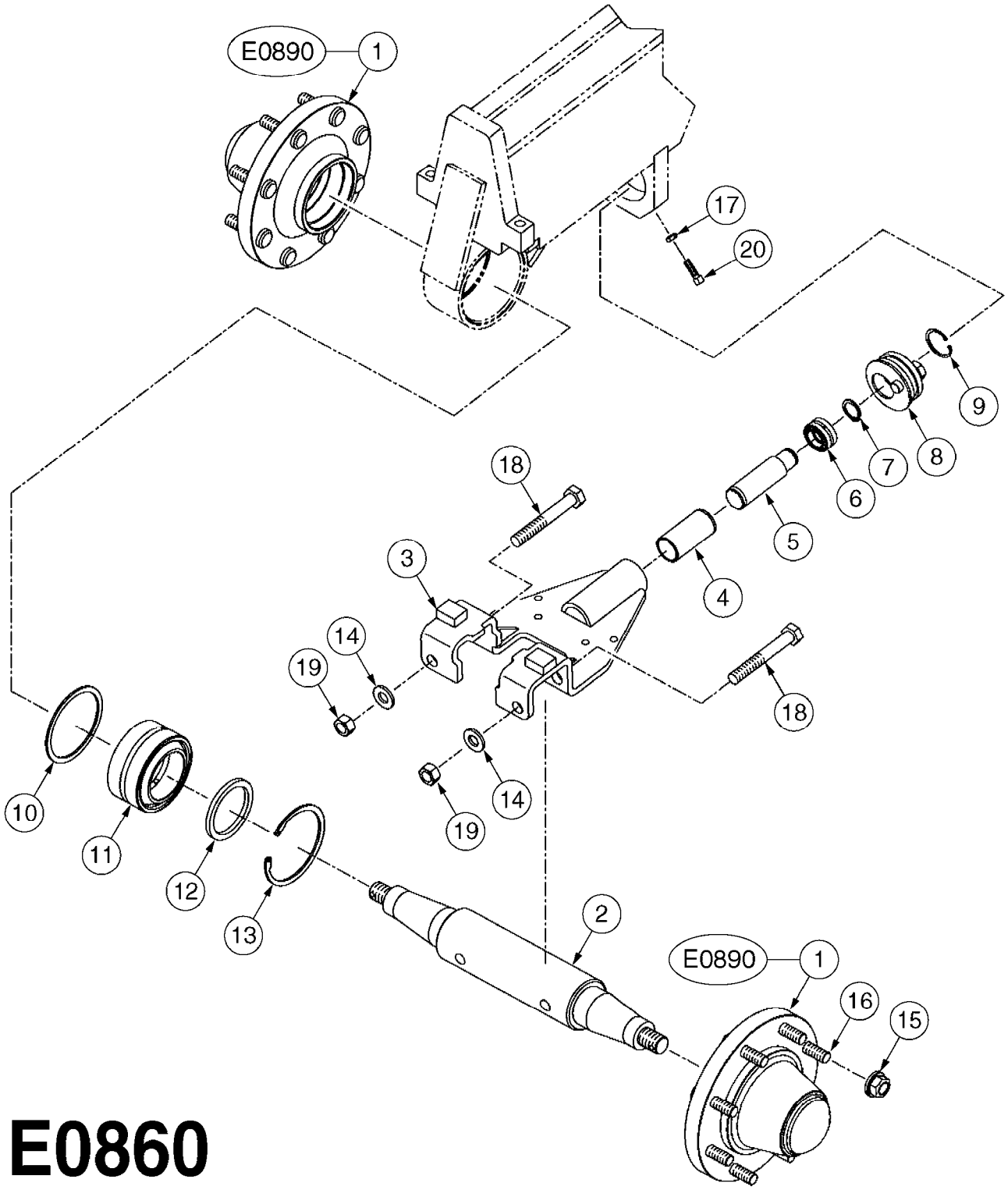

E0860

Agroparts: www.HARDI-INTERNATIONAL.com

CAMOPLAST ALIGNMENT ASSEMBLY
E0860-HIN, 01:01:16

Date 12.08.2020 11:39

Pos.	parts-nº	order qty	description
1	28078303	1	HUB ASSY.IDLER, G60-8
			HUB COMPLETE W/LUG NUTS
2	28079203	1	AXLE, FRONT IDLER
3	28079303	1	ALIGNMENT FRAME
4	28079403	1	ALIGNMENT BUSHING
5	28079503	1	ALIGNMENT PIN
6	28079603	1	BEARING 1"IDX1.625"ODX0.875"
7	28079703	1	SNAP RING EXT. 1"
8	28079803	1	DISC, ECCENTRIC
9	28079903	1	SNAP RING, INT. 1-3/4"
10	28080003	1	SHIM, 12 GAUGE
11	28080103	1	BEARING 3"IDX4.75"ODX2.625"
12	28080203	1	WASHER, 1/4"
13	28080303	1	SNAP RING
14	28081203	1	WASHER21/32"IDX1-5/16"ODX0.146
15	28082103	1	LUG NUT SET (8) IDLER
16	28082203	1	WHEEL STUD SET (8) IDLER
17	28083603	1	JAM NUT 3/8"-16 UNC GR 8
18	28084703	1	BOLT 4-1/2" X 5/8"-11 UNC
19	28084803	1	NUT 5/8"-11 UNC GR 8
20	28084903	1	SET SCREW SQ.HD.1-1/2"X3/8"-16

HARDI	**Agroparts: www.HARDI-INTERNATIONAL.com**	
	CAMOPLAST BOGIE MID-ROLLER 30 E0870-HIN, 01:01:16	Page 0
		Date 12.08.2020 11:39

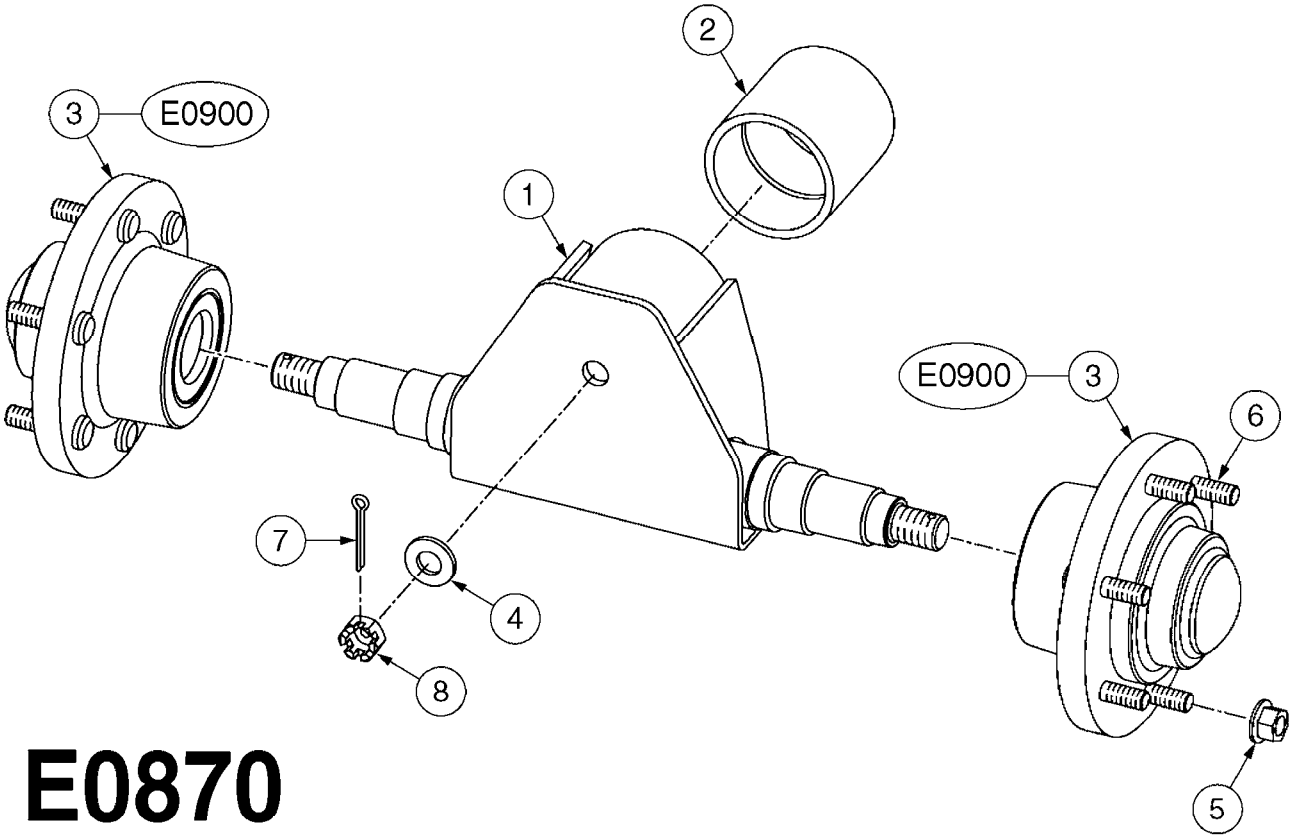

E0870

Agroparts: www.HARDI-INTERNATIONAL.com

CAMOPLAST BOGIE MID-ROLLER 30
E0870-HIN, 01:01:16

Date 12.08.2020 11:39

Pos.	parts-nº	order qty	description
1	28080403	1	MID-ROLLER DOGHOUSE(30 SERIES)
2	28080503	1	BUSHING
3	28080603	1	HUB ASSY.MID-ROLLER
			HUB COMPLETE W/LUG NUTS
4	28081203	1	WASHER21/32"IDX1-5/16"ODX0.146
5	28083003	1	LUG NUT SET (6) MID-ROLLER
6	28083103	1	WHEEL STUD SET (6) MID-ROLLER
7	28084603	1	COTTER PIN 1-1/4" X 5/32"
8	28085003	1	CASTLE NUT 5/8"-11 UNC GR 5

CAMOPLAST BOGIE MID-ROLLER 40
E0880-HIN, 01:01:16

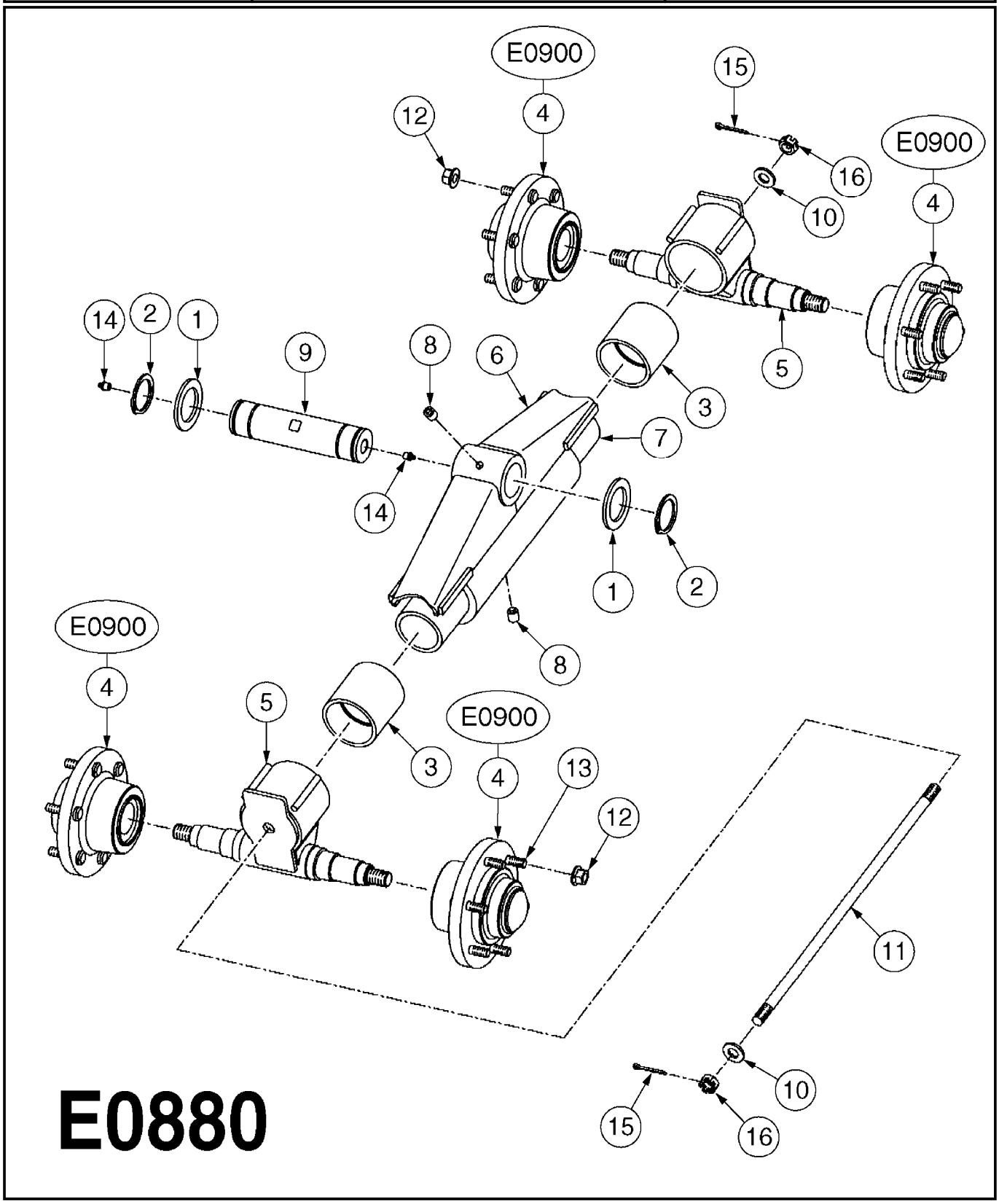

Agroparts: www.HARDI-INTERNATIONAL.com

CAMOPLAST BOGIE MID-ROLLER 40
E0880-HIN, 01:01:16

Date 12.08.2020 11:39

Pos.	parts-nº	order qty	description
1	28076003	1	WASHER,3"X2.02"X3/16"
2	28076103	1	SNAP RING EXT. 2"
3	28080503	1	BUSHING
4	28080603	1	HUB ASSY.MID-ROLLER HUB COMPLETE W/LUG NUTS
5	28080703	1	MID-ROLLER DOGHOUSE(40 SERIES)
6	28080803	1	HOUSING, BOGIE
7	28080903	1	AXLE, MID-ROLLER
8	28081003	1	SET SCREW, 3/4"X1/2"-13 UNC
9	28081103	1	PIN, BOGIE
10	28081203	1	WASHER21/32"IDX1-5/16"ODX0.146
11	28081303	1	RETAINER ROD
12	28083003	1	LUG NUT SET (6) MID-ROLLER
13	28083103	1	WHEEL STUD SET (6) MID-ROLLER
14	28084103	1	GREASE FITTING
15	28084603	1	COTTER PIN 1-1/4" X 5/32"
16	28085003	1	CASTLE NUT 5/8"-11 UNC GR 5

HARDI	**Agroparts: www.HARDI-INTERNATIONAL.com**	
	CAMOPLAST HUB ASSEMBLY - IDLER E0890-HIN, 01:01:16	Page 0
		Date 12.08.2020 11:39

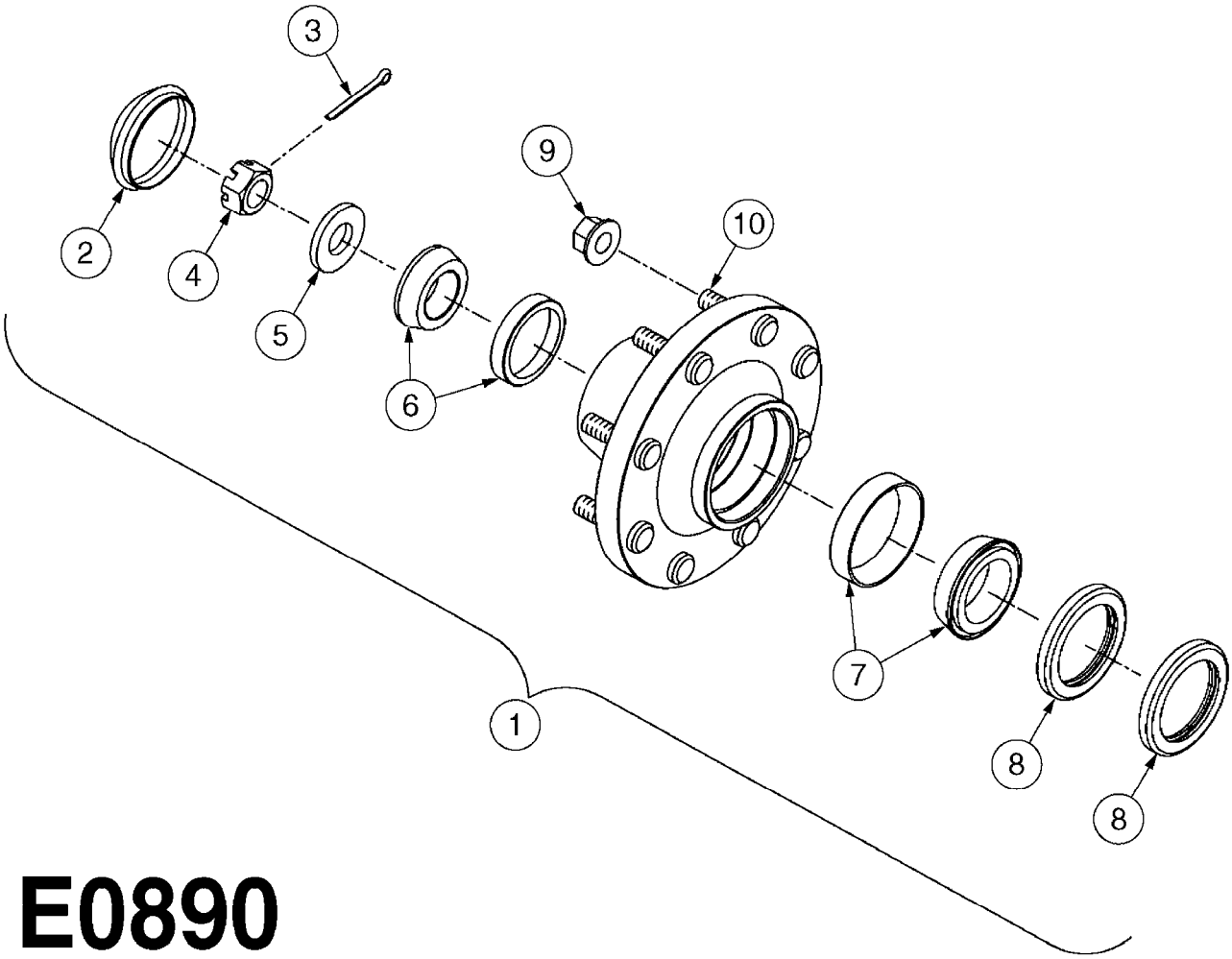

E0890

Agroparts: www.HARDI-INTERNATIONAL.com

CAMOPLAST HUB ASSEMBLY - IDLER
E0890-HIN, 01:01:16

Date 12.08.2020 11:39

Pos.	parts-n°	order qty	description
1	28078303	1	HUB ASSY.IDLER, G60-8
2	28081403	1	DUST CAP
3	28081503	1	COTTER PIN 7/32" X 2-1/4"
4	28081603	1	CASTLE NUT 1-1/4"-12
5	28081703	1	WASHER 1.28"IDX2.5"ODX0.13"
6	28081803	1	BEARING ASSEMBLY - OUTER
7	28081903	1	BEARING ASSEMBLY - INNER
8	28082003	1	WHEEL SEAL, SINGLE LIP
9	28082103	1	LUG NUT SET (8) IDLER
10	28082203	1	WHEEL STUD SET (8) IDLER

HARDI	**Agroparts: www.HARDI-INTERNATIONAL.com**	
	CAMOPLAST HUB ASSY. MID-ROLLER E0900-HIN, 01:01:16	Page 0
		Date 12.08.2020 11:39

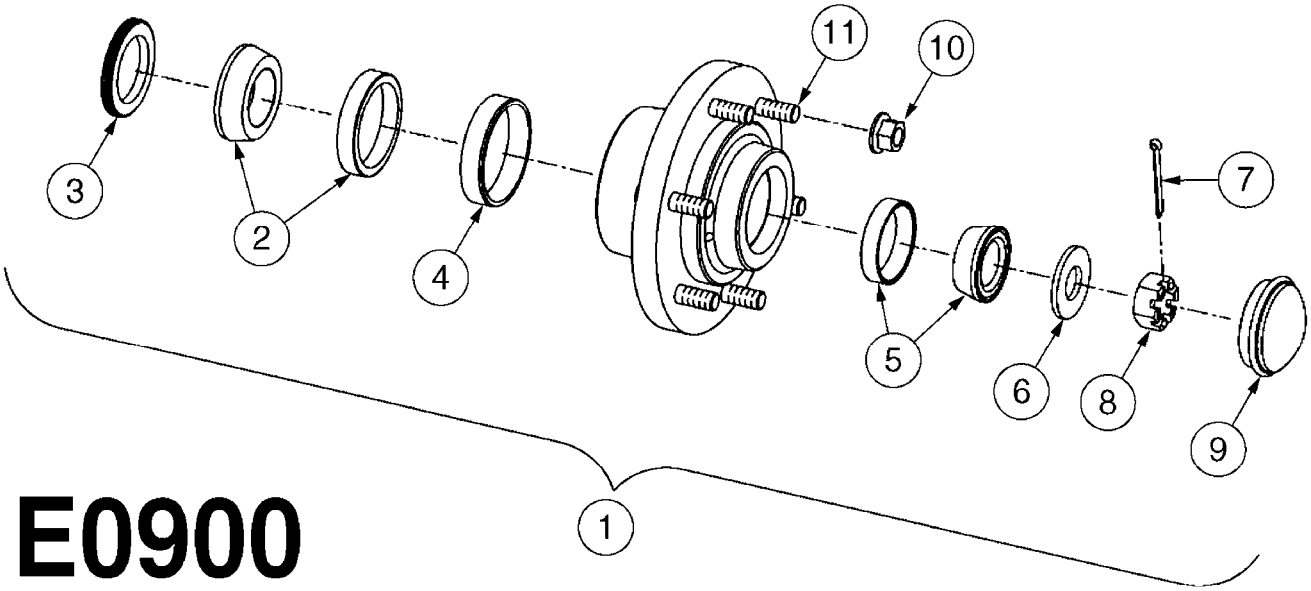

E0900

Agroparts: www.HARDI-INTERNATIONAL.com

CAMOPLAST HUB ASSY. MID-ROLLER
E0900-HIN, 01:01:16

Date 12.08.2020 11:39

Pos.	parts-nº	order qty	description
1	28080603	1	HUB ASSY.MID-ROLLER
2	28081803	1	BEARING ASSEMBLY - OUTER
3	28082303	1	WHEEL SEAL, TRIPLE LIP
4	28082403	1	WEAR RING
5	28082503	1	BEARING ASSEMBLY, 783 OUTER
6	28082603	1	WASHER 0.94"IDX2"ODX0.16"
7	28082703	1	COTTER PIN 1-3/4" X 5/32"
8	28082803	1	CASTLE NUT 7/8"-14 UNF
9	28082903	1	DUST CAP 2-3/4"OD X 2-7/16"
10	28083003	1	LUG NUT SET (6) MID-ROLLER
11	28083103	1	WHEEL STUD SET (6) MID-ROLLER

TANK - NAVIGATOR 3000/4000
E0910-HIN, 21:06:18

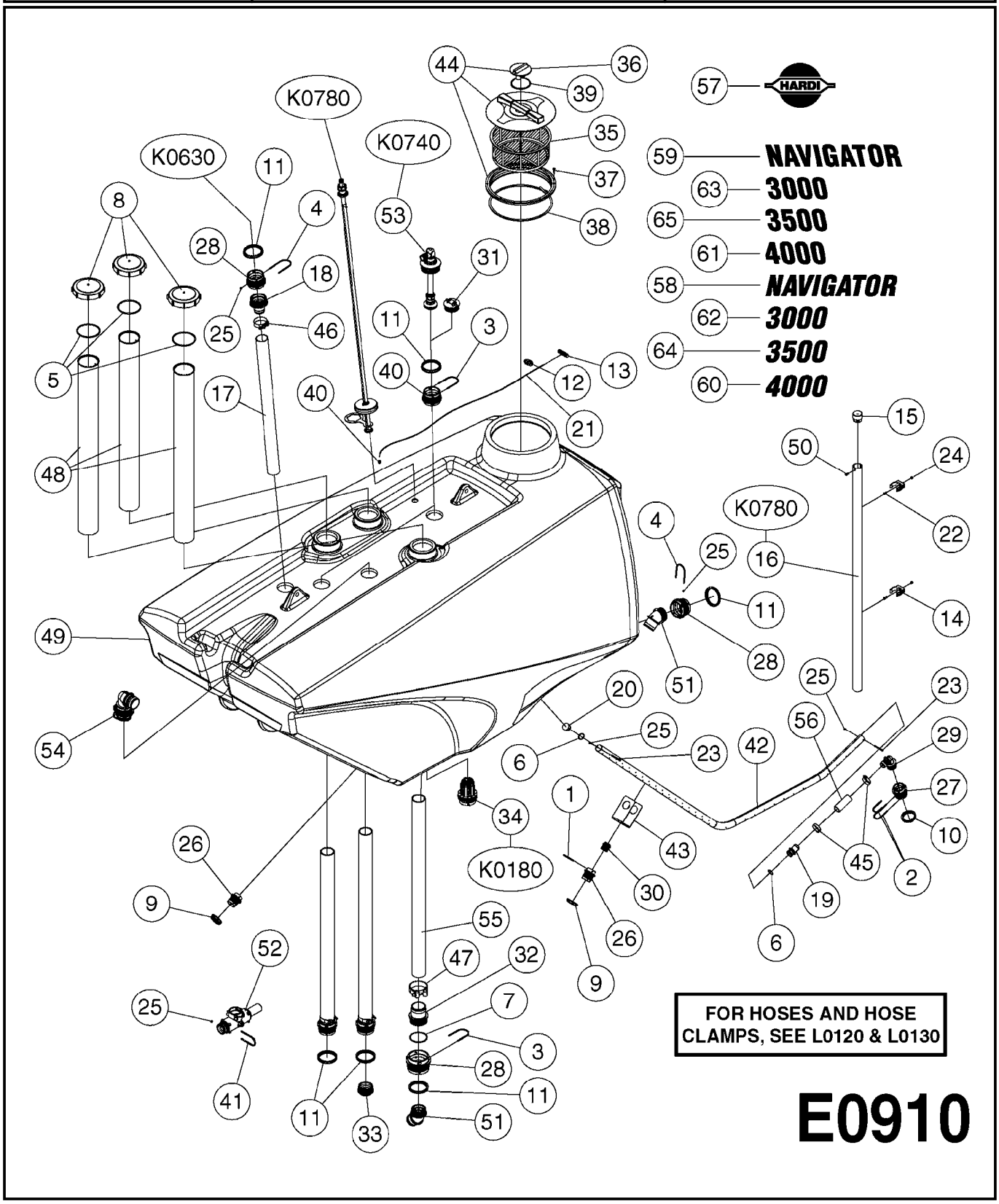

Agroparts: www.HARDI-INTERNATIONAL.com

TANK - NAVIGATOR 3000/4000
E0910-HIN, 21:06:18

Date 12.08.2020 11:39

Pos.	parts-n°	order qty	description
1	145995	1	FITT.DK S-53 FORK
2	145996	1	FITT.DK S-67 FORK
3	145997	1	FITT.DK S-93 FORK
4	147774	1	FITT.DK S-93 FORK W. M5 THREAD
5	241415	1	O-RING D117.5X5.33 NITRIL
6	241441	1	O-RING D29.3X3
7	242351	1	O-RING D69.5X3.0 VITON F.S-93
8	321591	1	LID 150MM NAV TK & FOAM MARKER
9	322107	1	FITT.DK S-53 BULKHEAD NUT
10	322108	1	FITT.DK S-67 BULKHEAD NUT
11	322109	1	FITT.DK S-93 BULKHEAD NUT
12	334469	1	CLEVIS F.CORD TOP DRAIN ASSY.
13	334472	1	HANDLE FOR TOP DRAIN
14	334523	1	PIPE HOLDER Ø51.5
15	334850	1	GUIDE F. SIGHT GAUGE TUBE TOP
16	341204	1	SIGHT GAUGE TUBE L=59"
16	341283	1	TUBE F.SIGHT GAUGE L=72"
16	97610203	1	DECAL SIGHT GAUGE NAV 3000 GAL
16	97610403	1	DECAL SIGHT GAUGE NAV 4000 GAL
16	97611503	1	DECAL SIGHT GAUGE NAV 3500 GAL
17	341333	1	TUBE Ø57/Ø52 L=1500 BLACK PE
18	390691	1	FITT.DK S-93 STR.2"PVC DRILLED
19	390902	1	SPARGE TUBE FITT FRONT
20	390903	1	CAP SPARGE TUBE
21	390982	1	CORD NYLON 4000MM
22	410185	1	BOLT HEX 8.8 DEL M6X16
23	411078	1	BOLT HEX M5 X 60 SS
24	460261	1	NUT HEX M6X1.00 LOCK DIN985 A2 SS
25	461217	1	NUT HEX M5 LOCK
26	726463	1	FITT.DK S53 BULKHEAD W/GASKET
27	726464	1	FITT.DK S-67 BULKHEAD W/GASKET
28	726465	1	FITT.DK S-93 BULKHEAD W/GASKET
29	726573	1	FITT. S67 5/4" 90° W/O-RING
30	726578	1	FITT.DK S53 PLUG WITH O-RING
31	726580	1	FITT. S93 PLUG W/O-RING
32	727133	1	HOSETAIL S93 2"1/2 + O-RING
33	728562	1	FITT.DK S-93 TO S67 ADAPTOR
34	730084	1	BOTTOM VALVE S93 2"RG-3M
35	10045303	1	FILTER BASKET 16"
36	10052203	1	LID VENT ASSY
37	10054503	1	SCREW 3/4" SELF TAPPING
38	10064203	1	SET SEALING SPONGE 1 Ft BULK
39	10102203	1	GASKET F.16" LID BREATHER
40	14001500	1	GROMMET F.TOP DRAIN CORD
41	14012200	1	FITT.DK S-67 FORK W/M5 THREADS
42	15102300	1	SPARGE TUBE STAINLESS NAV '07
43	16008300	1	BRACKET SPARGE TUBE
44	28014203	1	LID ASSY. (3-PC.) 16" ARAG
45	28030103	1	CLAMP HOSE GEAR P5/4-S1.5"6724
46	28030203	1	CLAMP HOSE T-BOLT S2" 235-67
47	28030303	1	CLAMP HOSE T-BOLT S2.5" 235-76
48	28082200	1	DROP TUBE Ø110/L=1120 NAV3000
48	28082300	1	DROP TUBE Ø110/L=1270 NAV4000
49	35003603	1	TANK, MAIN 3000L NAVIGATOR RAW
49	35003703	1	TANK, MAIN 4000L NAVIGATOR RAW
49	35004403	1	TANK, MAIN 3500L NAVIGATOR
50	44075300	1	SCREW 3.5X9.5SS/X15 ISO 14585C
51	72072900	1	FITT. S93 2-1/2" 45° S W/O-RING
52	72280300	1	SAFTY VALVE S67 15 BAR CM'05
53	72358000	1	TANK RINSE LOW MOD.ASSMBLY NCM
54	72374800	1	TANK VENT S93 2-1/2" NAV/NCM

Pos.	parts-nº	order qty	description
55	92702803	1	HOSE PVC SUCT GRAY 2.5"
56	92734403	1	HOSE R X5/4" X200PSI WP X0012"
57	97617003	1	DECAL - HARDI 3D LOGO F.TANK 335 X 210
58	97819300	1	DECAL NAVIGATOR LEFT 06
59	97819400	1	DECAL NAVIGATOR RIGHT 06
60	97819500	1	DECAL 4000 LEFT 06
61	97819600	1	DECAL 4000 RIGHT 06
62	97819700	1	DECAL 3000 LEFT 06
63	97819800	1	DECAL 3000 RIGHT 06
64	97824300	1	DECAL 3500 LEFT USA
65	97824400	1	DECAL 3500 RIGHT USA

TANK - NAVIGATOR 4500/6200
E0915-HIN, 10:08:18

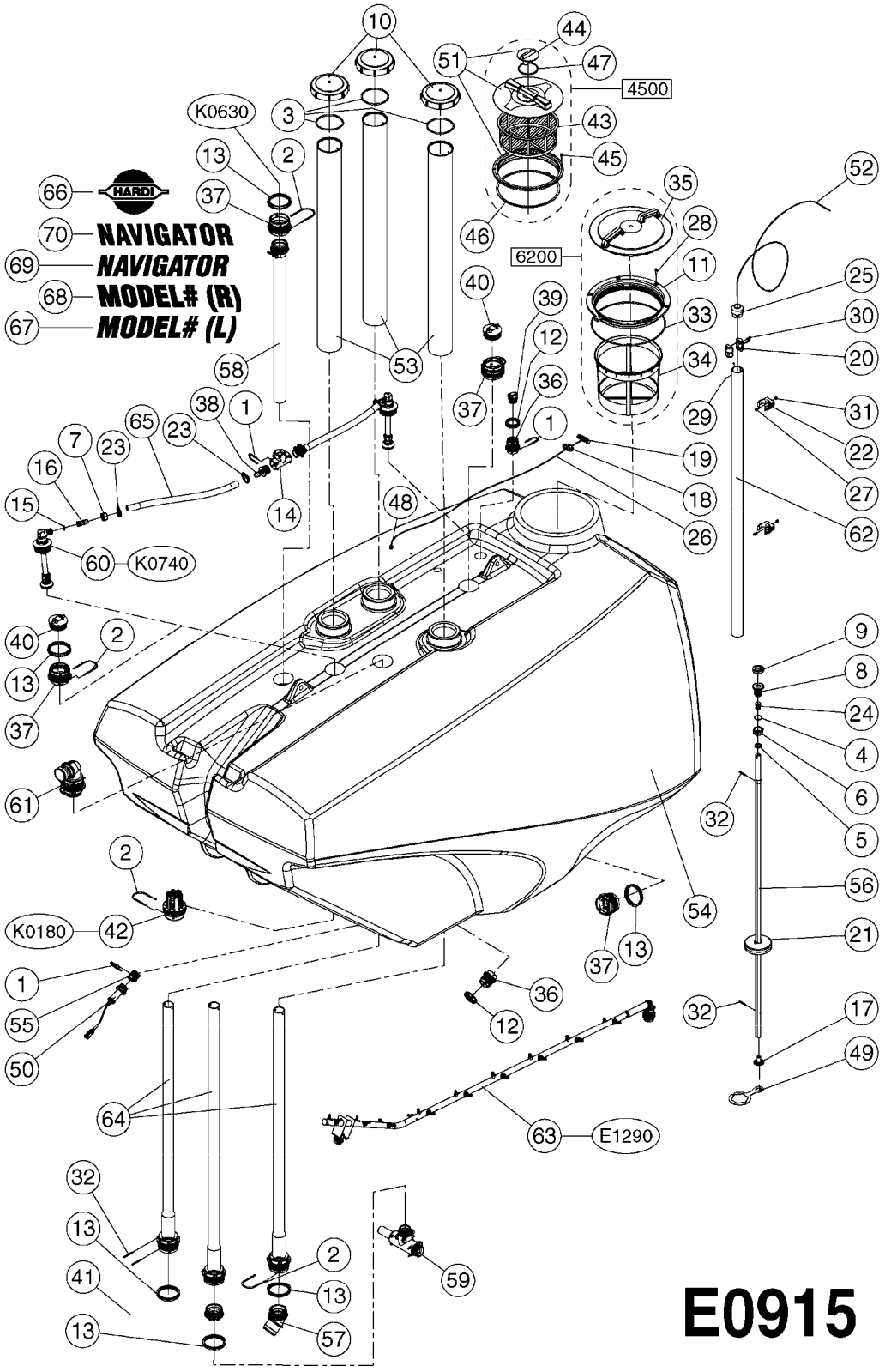

Agroparts: www.HARDI-INTERNATIONAL.com

TANK - NAVIGATOR 4500/6200
E0915-HIN, 10:08:18

Date 12.08.2020 11:39

Pos.	parts-n°	order qty	description
1	145995	1	FITT.DK S-53 FORK
2	145997	1	FITT.DK S-93 FORK
3	241415	1	O-RING D117.5X5.33 NITRIL
4	242262	1	O-RING D31X3 VITON
5	242309	1	SEAL Ø22 ID Ø30 OD X 4 HIGH
6	320095	1	FITT.DK NUT 1" BSP
7	320283	1	FITT.DK NUT 3/4"BSP
8	320467	1	FITT.DK BULKHEAD 1"BSP SINGLE
9	320471	1	FITT.DK NUT 1" BSP JAMB
10	321591	1	LID 150MM NAV TK & FOAM MARKER
11	322097	1	THREADED RING F. LID
12	322107	1	FITT.DK S-53 BULKHEAD NUT
13	322109	1	FITT.DK S-93 BULKHEAD NUT
14	322352	1	FITT.DK S-53 TEE
15	330595	1	O-RING D24.6/D20X2.1 -3/4"
16	330691	1	FITT.DK HB 3/4'F.3/4' NUT
17	333864	1	GUIDE F. SAFETY VALVE SPRING
18	334469	1	CLEVIS F.CORD TOP DRAIN ASSY.
19	334472	1	HANDLE FOR TOP DRAIN
20	334513	1	MARKER HALF SIGHT GAUGE
21	334515	1	FLOATER FOR LIQUID LEVEL
22	334523	1	PIPE HOLDER Ø51.5
23	334531	1	CLAMP HOSE PLASTIC 3/4"
24	334849	1	SIGHT GAUGE GUIDE F. SS TUBE
25	334850	1	GUIDE F. SIGHT GAUGE TUBE TOP
26	390401	1	CORD NYLON F.LID 900MM
27	410185	1	BOLT HEX 8.8 DEL M6X16
28	440392	1	SCREW 6.3 X 25.0 DIN7981C TORX
29	440663	1	SCREW 3/8" NR4 STAINLESS
30	440677	1	SCREW F. PLASTIC 5X20 SS
31	460261	1	NUT HEX M6X1.00 LOCK DIN985 A2 SS
32	480717	1	PIN E 5X40 SST
33	614588	1	SEAL F. LID
34	614602	1	FILTER BASKET
35	726003	1	LID F. TANK
36	726463	1	FITT.DK S53 BULKHEAD W/GASKET
37	726465	1	FITT.DK S-93 BULKHEAD W/GASKET
38	726558	1	FITT.DK S53 STR. 3/4" W.ORING
39	726578	1	FITT.DK S53 PLUG WITH O-RING
40	726580	1	FITT. S93 PLUG W/O-RING
41	728562	1	FITT.DK S-93 TO S67 ADAPTOR
42	730084	1	BOTTOM VALVE S93 2"RG-3M
43	10045303	1	FILTER BASKET 16"
44	10052203	1	LID VENT ASSY
45	10054503	1	SCREW 3/4" SELF TAPPING
46	10064203	1	SET SEALING SPONGE 1 Ft BULK
47	10102203	1	GASKET F.16" LID BREATHER
48	14001500	1	GROMMET F.TOP DRAIN CORD
49	16135600	1	GUIDE FOR SIGHT GAUGE NAV/NCM
50	26014100	1	TANK SENSOR-ELECTRONIC
51	28014203	1	LID ASSY. (3-PC.) 16" ARAG
52	28034100	1	CABLE F.LIQUID LEVEL IND. SS L=5M
53	28082200	1	DROP TUBE Ø110/L=1120 NAV3000
53	28082300	1	DROP TUBE Ø110/L=1270 NAV4000
54	35003703	1	TANK, MAIN 4000L NAVIGATOR RAW
54	35185400	1	TANK. 6000L UNDRILLED. NAVIGATOR. NO DECALS
55	39123100	1	ADAPTER S53/1" RG.
56	61036700	1	GUIDE TUBE F.FLOATER, L=1850, NV4000/CM4400
56	61098200	1	GUIDE TUBE F. FLOATER NAV 6000
57	72072900	1	FITT. S93 2-1/2" 45° S W/O-RING
58	72099100	1	QUICK FILL 2" DROP TUBE ASSY

Pos.	parts-n°	order qty	description
59	72280300	1	SAFTY VALVE S67 15 BAR CM'05
60	72358000	1	TANK RINSE LOW MOD.ASSMBLY NCM
61	72374800	1	TANK VENT S93 2-1/2" NAV/NCM
62	72542700	1	SIGHT GAUGE W/DECAL NAV 4000 G
62	72968700	1	SIGHT GAUGE W/DECAL NAV 6000 G
63	72880900	1	SPARGETUBE NAV4500 COMPLETE
63	72890800	1	SPARGETUBE NAV6200 COMPLETE
64	72889800	1	RISER 2" S93 L=1780 NAV 5/6000
65	92703203	1	HOSE R X3/4" X300PSI WP X0012"
66	97617003	1	DECAL - HARDI 3D LOGO F.TANK 335 X 210
67	97620203	1	DECAL 4500 LEFT
67	97617303	1	DECAL 6000 LEFT
67	97620403	1	DECAL 6200 LEFT
68	97620303	1	DECAL 4500 RIGHT
68	97617403	1	DECAL 6000 RIGHT
68	97620503	1	DECAL 6200 RIGHT
69	97819300	1	DECAL NAVIGATOR LEFT 06
70	97819400	1	DECAL NAVIGATOR RIGHT 06

LOCKER & CLEAN WATER TANK NAV
E0920-HIN, 01:01:16

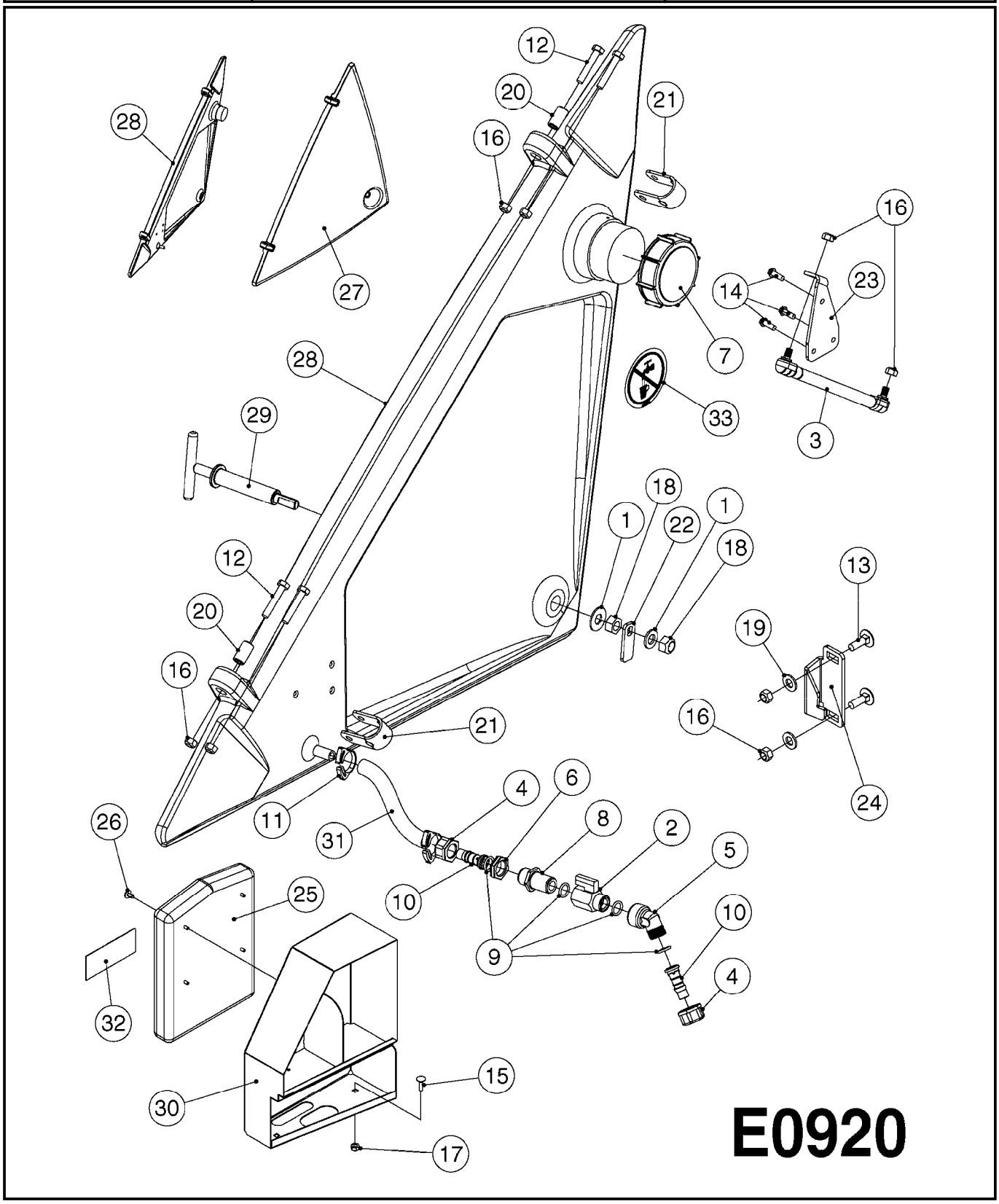

Agroparts: www.HARDI-INTERNATIONAL.com

LOCKER & CLEAN WATER TANK NAV
E0920-HIN, 01:01:16

Date 12.08.2020 11:39

Pos.	parts-nº	order qty	description
1	160521	1	WASHER D30.5/D13X2
2	281551	1	BALL VALVE 1/2"
3	285793	1	GAS CYLINDER
4	320084	1	FITT.DK NUT 1/2" BSP
5	320482	1	FITT.DK ELB. 1/2" BSP 60 DEG.
6	321307	1	FITT.DK NUT 1/2" BSP JAMB
7	321322	1	SCREW CAP F. S80 X 4
8	321742	1	FITT.DK BULKHEAD 1/2' BSP
9	330212	1	O-RING D19/D14X2.4 F.1/2"NUT
10	330687	1	FITT.DK HB 1/2" F. 1/2" NUT
11	334534	1	CLAMP HOSE PLASTIC 1/2"
12	420766	1	BOLT HEX M8-45/22 SST A2 DIN931
13	440695	1	BOLT CARRIAGE M8X25
14	440698	1	SCREW F.PLASTIC 6X18 SS HEXHD
15	440737	1	BOLT CARRIAGE M10x25 SS
16	460143	1	LOCK NUT M8 SST A2 DIN985
17	460423	1	NUT HEX M10X1.50 LOCK DIN985A2 SS
18	460703	1	NUT HEX M12X1.75 LOCK DIN985A2 SS
19	471122	1	WASHER, M10, Ø20/10.5X 2.0, SS
20	14072600	1	BUSHING FOR NAV SHIELD
21	16213600	1	U-CLAMP FOR NAVIGATOR
22	16215900	1	LOCKING DEVICE F.SIDE SHIELD
23	16225500	1	BRACKET F.GAS CYLINDER NAV.
24	16226300	1	PLATE, LOCK CHEEK NAV LEFT,RAW FOR LEFT SIDE SHIELD (NOT SHOWN)
24	16226500	1	PLATE, LOCK CHEEK NV RIGHT,RAW FOR RIGHT SIDE SHIELD (SHOWN)
25	29003003	1	MANUAL HOLDER, FLAT
26	29003103	1	PLASTIC PUSH RIVET, 1/4" HOLE
27	35179100	1	SIDE SHIELD L. NAVIGATOR
28	35180000	1	SIDE SHIELD CLEAN WATER R.NAV
29	61049000	1	HANDLE FOR SIDE SHIELD
30	63062300	1	SAFETYLOCKER NAVIGATOR PAINTED
31	92702103	1	HOSE R X1/2" X300PSI WP X0012"
32	97607503	1	DECAL-OPERATOR'S MANUAL (LRG.)
33	97802300	1	DECAL - NOT DRINKING WATER D60

FRAME-NAVIGATOR 3000/3500/4000
E0930-HIN, 12:07:17

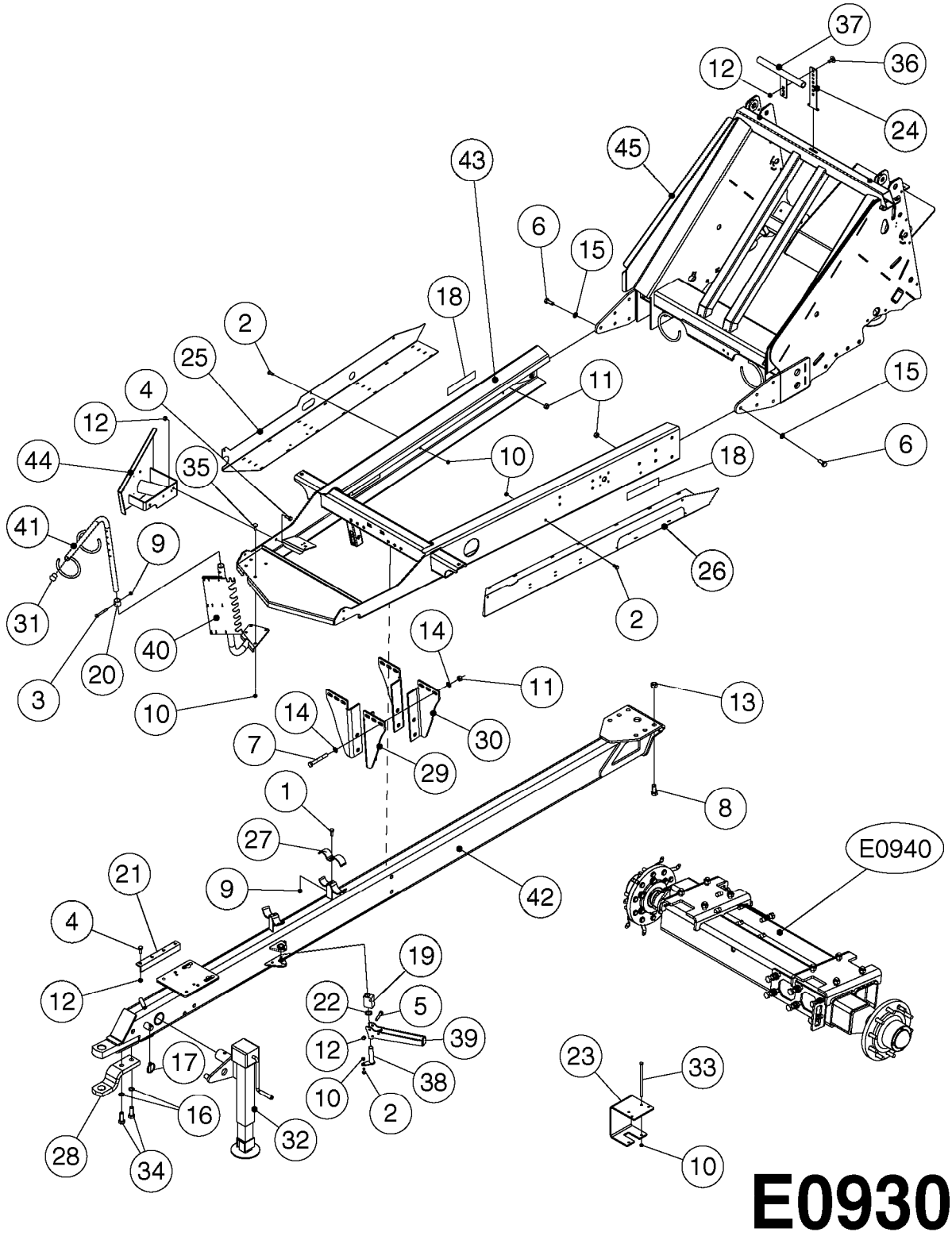

E0930

Agroparts: www.HARDI-INTERNATIONAL.com

FRAME-NAVIGATOR 3000/3500/4000
E0930-HIN, 12:07:17

Date 12.08.2020 11:39

Pos.	parts-nº	order qty	description
1	420567	1	BOLT HEX 8.8 DEL M8X30 FT
2	420604	1	BOLT HEX 8.8 DEL M10X25 FT DIN933
3	420766	1	BOLT HEX M8-45/22 SST A2 DIN931
4	430286	1	BOLT HEX 8.8 DEL M12X30 FT
5	430438	1	BOLT HEX 8.8 DEL M12X65
6	430581	1	BOLT HEX 8.8 DEL M16X40 FT
7	430864	1	BOLT HEX 8.8 DEL M16X120
8	430890	1	BOLT HEX 8.8 DEL M20X50
9	460143	1	LOCK NUT M8 SST A2 DIN985
10	460423	1	NUT HEX M10X1.50 LOCK DIN985A2 SS
11	460585	1	LOCKING NUT M16 DIN985 A2 SS
12	460703	1	NUT HEX M12X1.75 LOCK DIN985A2 SS
13	460806	1	NUT HEX M20X2.50 LOCK DIN985A2 SS
14	471128	1	WASHER, M16, Ø30/17.0X 3.0, SS
15	471168	1	PAIR OF WASHERS NL16 17X25,4x3,4
16	471180	1	LOCK WASHER NORDLOCK M20 ELZ
17	480303	1	PIN 7/16 SNAP RING
18	10533903	1	DECAL REFLECTIVE AMBER 50X230
19	14073600	1	50X35X75 BRACKET F.STEP
20	15116700	1	BUSHING NAVIGATOR HOSE HOLDER
21	16116803	1	PLATE, PUMP MOUNT NAVIGATOR
			ONLY ON FRAMES BUILT BEFORE 9/2008
22	16127500	1	WASHER D40.0/27.0/2.0
23	16159803	1	BRKT, ACE 650, US NAV
			ACE 650 BRACKET F.LONG DRAWBAR
23	16162103	1	BRKT, ACE 650, DK NAV
			ACE 650 BRACKET FOR STD. DRAWBAR
24	16198600	1	T FOR REAR NAV TANK MOUNT B
25	16212600	1	CABLE TRAY NAV RIGHT RED
26	16212800	1	CABLE TRAY NAV LEFT
27	16216500	1	CLAMP, PUMP HOSES NAVIGATOR
28	16391700	1	FLATBAR F. CLEVIS, PAINTED
29	16441600	1	BRKT, DB TO FRAME 1 (2014)
30	16441800	1	BRKT, DB TO FRAME 2 (2014)
31	28046400	1	PIPE PLUG Ø25/1.0-2.0, BLACK
32	28082600	1	SUPPORT LEG F. NAV, CM+3000KG
33	42000103	1	BOLT HEX 8.8 DEL M10X230
34	43000803	1	BOLT HEX M20 X 70MM DEL - FT
35	44074300	1	BOLT CARRIAGE M10x30 SS
36	45001300	1	CARRIAGE BOLT M12X35 DIN603 A2
37	61044000	1	T FOR REAR NAV TANK MOUNT A
38	61048100	1	PIN D24.8 L=107
39	61050100	1	PAINTED STEP F.NAV
40	61053300	1	HOSE HOLDER LOWER NAVIGATOR
41	61053400	1	HOSE HOLDER UPPER NAVIGATOR
42	63036903	1	DRAWBAR FOR NAV-120' SPC
			LONG DRAWBAR (FOR 120'/90' DUAL FOLD BOOM)
42	63052700	1	DRAWBAR D42 NAVIGATOR RED
			STANDARD (SHORT) DRAWBAR
43	63057700	1	FRAME MID "A" SHAPE NAVIGATOR RED
44	63068000	1	SHIELD NAV RIGHT JACK MOUNT
45	63144300	1	REAR CHASSIS F.NAV. '13 RED

FRAME-NAVIGATOR 6000
E0935-HIN, 06:07:17

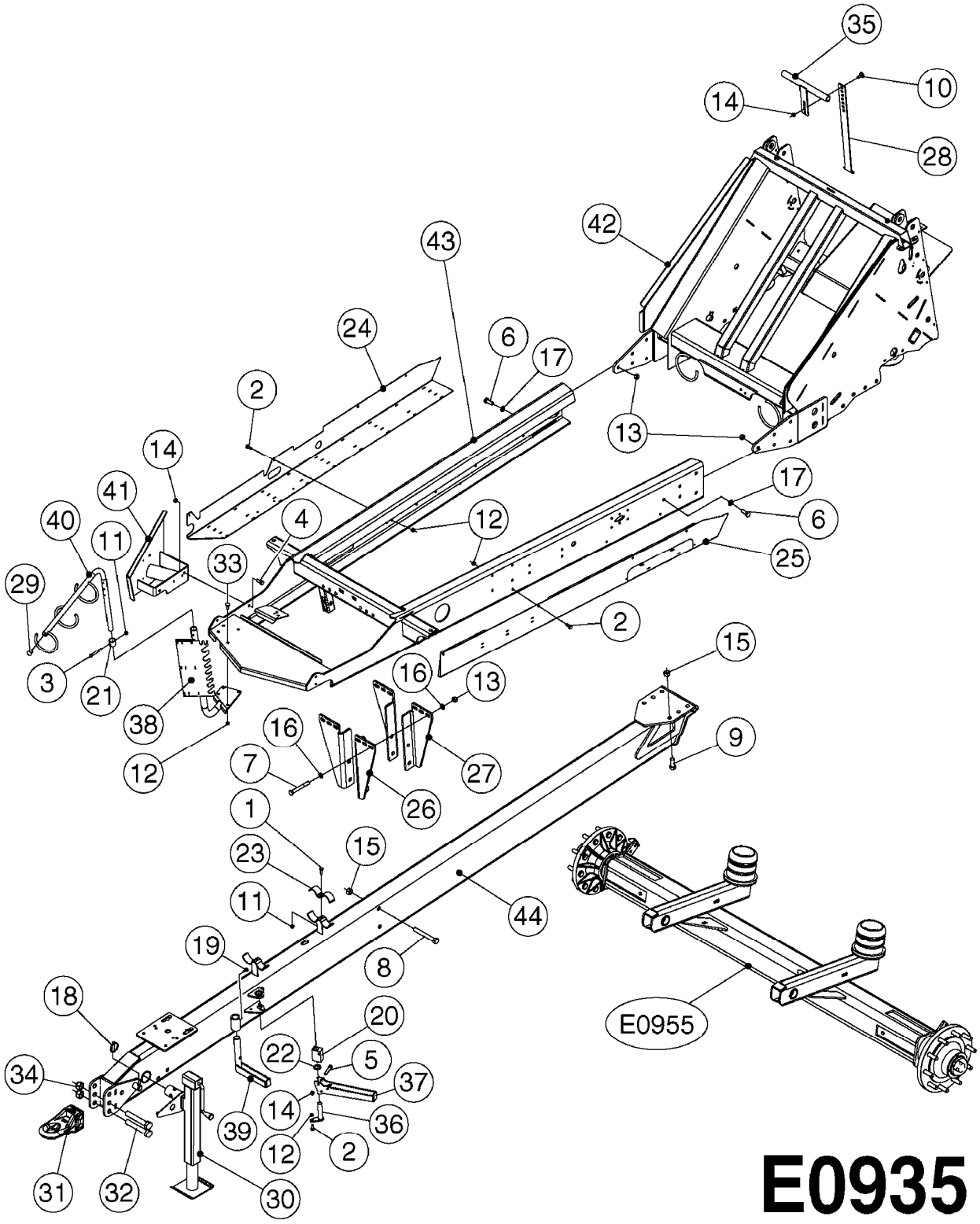

E0935

Agroparts: www.HARDI-INTERNATIONAL.com

FRAME-NAVIGATOR 6000
E0935-HIN, 06:07:17

Date 12.08.2020 11:39

Pos.	parts-nº	order qty	description
1	420567	1	BOLT HEX 8.8 DEL M8X30 FT
2	420604	1	BOLT HEX 8.8 DEL M10X25 FT DIN933
3	420744	1	BOLT HEX 8.8 DEL M8X40
4	430286	1	BOLT HEX 8.8 DEL M12X30 FT
5	430438	1	BOLT HEX 8.8 DEL M12X65
6	430581	1	BOLT HEX 8.8 DEL M16X40 FT
7	430864	1	BOLT HEX 8.8 DEL M16X120
8	430886	1	BOLT HEX 8.8 DEL M20X160
9	430890	1	BOLT HEX 8.8 DEL M20X50
10	451070	1	CARRIAGE BOLT M12X30
11	460143	1	LOCK NUT M8 SST A2 DIN985
12	460423	1	NUT HEX M10X1.50 LOCK DIN985A2 SS
13	460585	1	LOCKING NUT M16 DIN985 A2 SS
14	460703	1	NUT HEX M12X1.75 LOCK DIN985A2 SS
15	460806	1	NUT HEX M20X2.50 LOCK DIN985A2 SS
16	471128	1	WASHER, M16, Ø30/17.0X 3.0, SS
17	471168	1	PAIR OF WASHERS NL16 17X25,4x3,4
18	480303	1	PIN 7/16 SNAP RING
19	14057200	1	MSK.SKR.M10X 16 RST BEARB. Ø8
20	14073600	1	50X35X75 BRACKET F.STEP
21	15116700	1	BUSHING NAVIGATOR HOSE HOLDER
22	16127500	1	WASHER D40.0/27.0/2.0
23	16216500	1	CLAMP, PUMP HOSES NAVIGATOR
24	16362100	1	CABLE TRAY NAV 5/6000 RIGHT
25	16362200	1	CABLE TRAY NAV 5/6000 LEFT
26	16377300	1	BRACKET ANGLE DRAWBAR TO FRAME R., NAV 5/6000
27	16377500	1	BRACKET ANGLE DRAWBAR TO FRAME L., NAV 5/6000
28	16379600	1	T FOR REAR NAV 5/6000 TANK MOUNT B
29	28046400	1	PIPE PLUG Ø25/1.0-2.0, BLACK
30	28082600	1	SUPPORT LEG F. NAV, CM+3000KG
31	28091403	1	HITCH BASE, CAT.3, NAV 6000, PAINTED
32	43001203	1	BOLT HEX 1" DEL GR.8 6.25"
33	44074300	1	BOLT CARRIAGE M10x30 SS
34	46001903	1	NUT HEX 1" LOCK SS
35	61044000	1	T FOR REAR NAV TANK MOUNT A
36	61048100	1	PIN D24.8 L=107
37	61050100	1	PAINTED STEP F.NAV
38	61053300	1	HOSE HOLDER LOWER NAVIGATOR
39	61077900	1	FOOTSTEP F.DRAWBAR, LOWER
40	61096400	1	HOSE HOLDER NAV 5/6000
41	63068000	1	SHIELD NAV RIGHT JACK MOUNT
42	63144300	1	REAR CHASSIS F.NAV. '13 RED
43	63144500	1	FRAME MID "A" SHAPE NAVIGATOR 5/6000
44	63167100	1	DRAWBAR ASSY. F.NAV 5/6000

NAVIGATOR SUSPENSION AND AXLES
E0940-HIN, 01:07:20

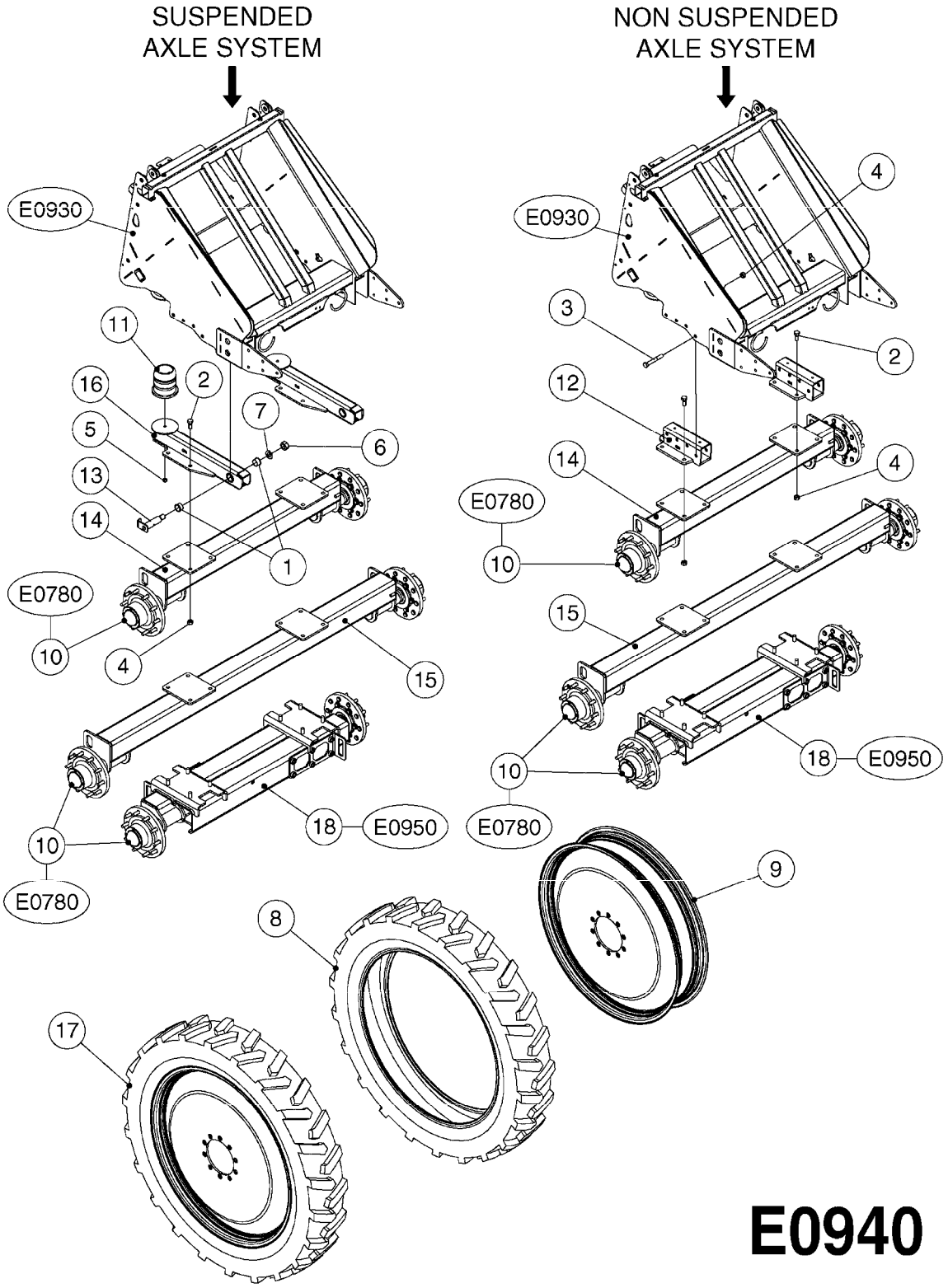

E0940

NAVIGATOR SUSPENSION AND AXLES
E0940-HIN, 01:07:20

Date 12.08.2020 11:39

Pos.	parts-nº	order qty	description
1	210863	1	BUSHING DU FLNG. D40/44 L=26
2	430890	1	BOLT HEX 8.8 DEL M20X50
3	430979	1	BOLT HEX M20x140 8.8 DELTA
4	460806	1	NUT HEX M20X2.50 LOCK DIN985A2 SS
5	461253	1	NUT HEX M14 NV=22 A4 RST
6	461316	1	NUT HEX LOCK M30X3.5 DIN 985
7	471131	1	WASHER, M30, Ø56/31.0X 4.0, SS
8	10615703	1	TIRE 320
			90R46' RAD.TL 357774
8	28061803	1	TIRE, 380/90 R46 168LI R1
9	28021703	1	RIM 46"Ø-10"W 10B-11.25BC-5.19
9	28061403	1	RIM 46X13,11.25BC,8.7P,-5.19OS
10	28050003	1	HUB F 3.5" 873 15000# PACKAGE
11	28076200	1	BUMPER PUR Ø140X166-M14 BLACK
12	61044300	1	FIXED AXLE NAV NO SUSPENSION
13	61046700	1	PIN SWING ARM NAV SUSP
14	63034803	1	AXLE NAVIGATOR 60" 2010
			AXLE ONLY
14	70079703	1	AXLE FIXED 60" NAVIGATOR 2010
			COMPLETE W/HUBS & SPEED SENS.MT.
15	63034903	1	AXLE NAVIGATOR 120" 2010
			AXLE ONLY
15	70079803	1	AXLE FIXED 120" NAVIGATOR 2010
			COMPLETE W/HUBS & SPEED SENS.MT.
16	63059100	1	SUSPENSION SWINGARM, NAVIGATOR. RED
17	70024003	1	WHEEL/TIRE 5 3/160S 320/46 LH
17	70024103	1	WHEEL/TIRE 5 3/160S 320/46 RH
17	70092003	1	WHEEL/TIRE 5 3/160S 380/46 LH
17	70092103	1	WHEEL/TIRE 5 3/160S 380/46 RH
18	70074703	1	AXLE ADJUSTABLE 60-120 NV DBL

	Agroparts: www.HARDI-INTERNATIONAL.com	
HARDI	NAV. ADJUSTABLE AXLE 60"-120" E0950-HIN, 01:01:16	Page 0 Date 12.08.2020 11:39

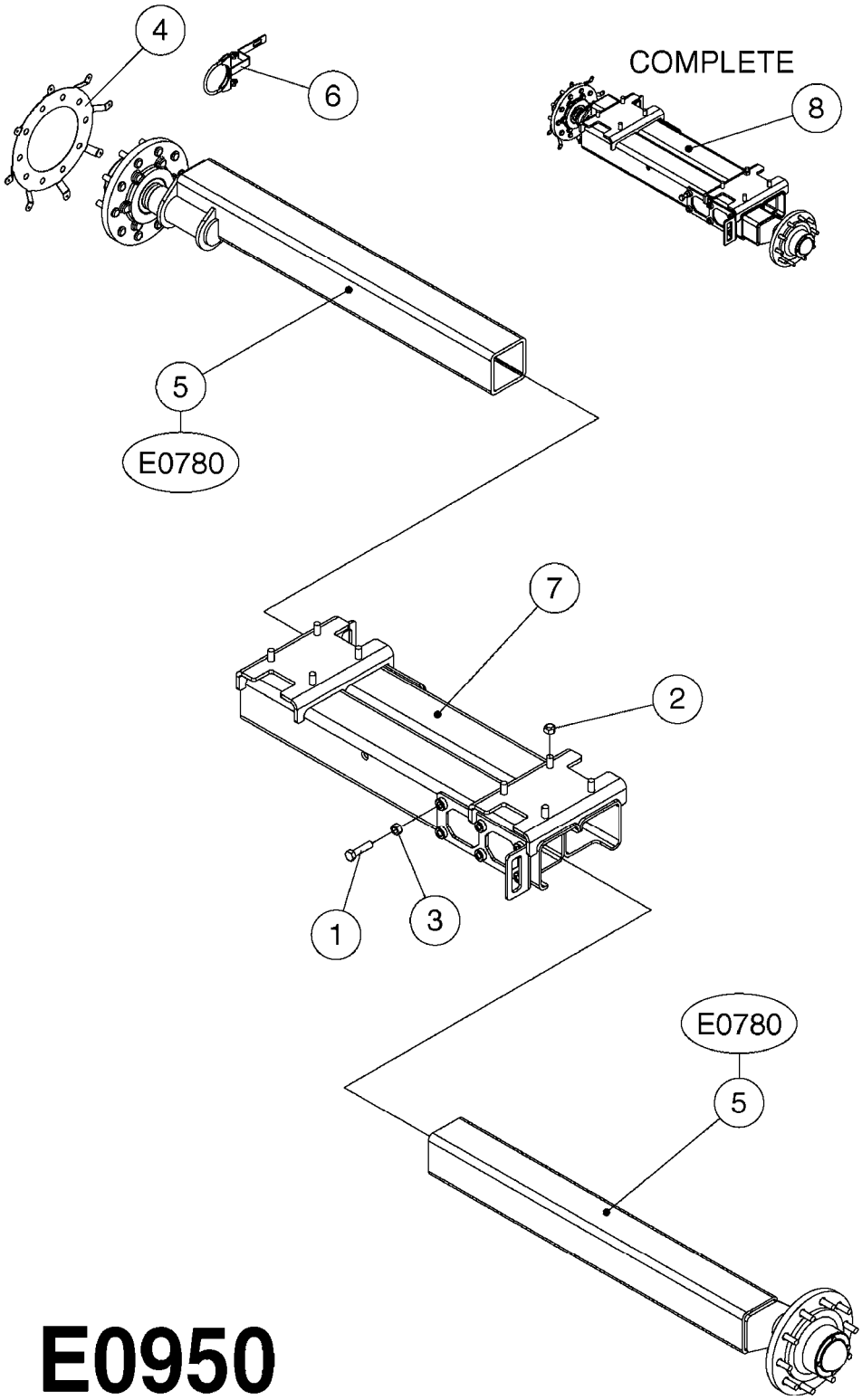

E0950

Agroparts: www.HARDI-INTERNATIONAL.com

NAV. ADJUSTABLE AXLE 60"-120"
E0950-HIN, 01:01:16

Date 12.08.2020 11:39

Pos.	parts-nº	order qty	description
1	430920	1	BOLT HEX M20x80MM
2	460806	1	NUT HEX M20X2.50 LOCK DIN985A2 SS
3	461228	1	NUT HEX M20
4	16020203	1	WHEEL SENSOR MAGNET MNT 10BLT
5	28050003	1	HUB F 3.5" 873 15000# PACKAGE
5	63030203	1	AXLE ADJ 60-120 INSERT NAV DBL
6	61003603	1	SPEED SNS MNT CLAMP 3.5" SP
7	63030303	1	AXLE ADJ. 60-120 NAVIGATOR DBL
8	70074703	1	AXLE ADJUSTABLE 60-120 NV DBL

NAVIGATOR 6200 AXLES
E0955-HIN, 07:07:17

Date 12.08.2020 11:39

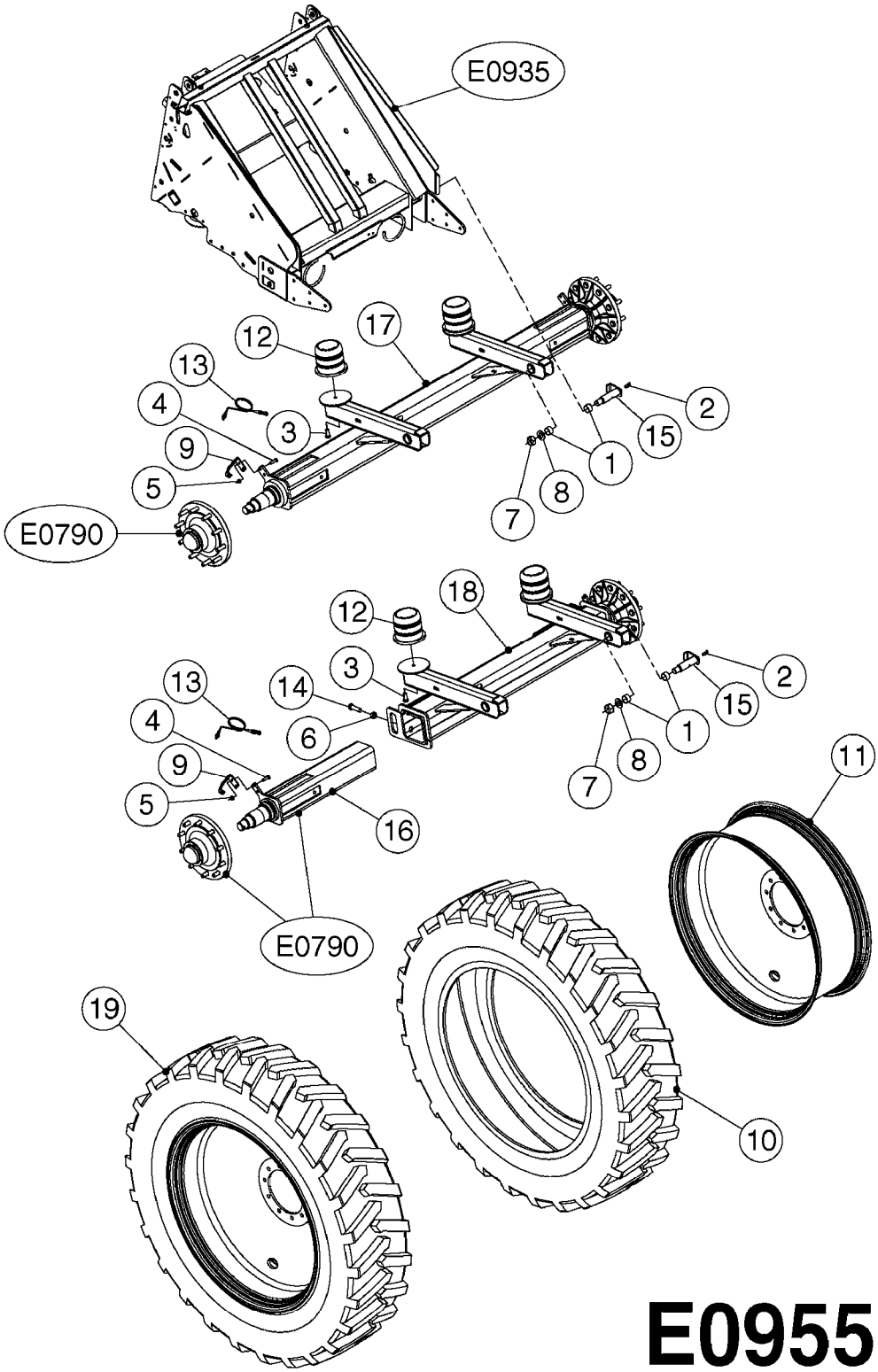

E0955

Agroparts: www.HARDI-INTERNATIONAL.com

NAVIGATOR 6200 AXLES
E0955-HIN, 07:07:17

Date 12.08.2020 11:39

Pos.	parts-n°	order qty	description
1	210863	1	BUSHING DU FLNG. D40/44 L=26
2	283772	1	GREASE NIPPLE M6X1 90°
3	430581	1	BOLT HEX 8.8 DEL M16X40 FT
4	430721	1	BOLT HEX 8.8 DEL M12X40 FT
5	460703	1	NUT HEX M12X1.75 LOCK DIN985A2 SS
6	461228	1	NUT HEX M20
7	461316	1	NUT HEX LOCK M30X3.5 DIN 985
8	471131	1	WASHER, M30, Ø56/31.0X 4.0, SS
9	16177403	1	SPEED SENSOR MOUNT (2013), PAINTED
10	28073503	1	TIRE, 380/90R46 168D ULTRASPRAY TL
10	28090603	1	TIRE, 320/90R50 169D ULTRASPRAY
10	28090803	1	TIRE, 480/80R46 168A8/B SUPER TRAC TL
11	28090203	1	WHEEL 46XW13A/13.19 BC/11.07 P
11	28090303	1	WHEEL 46XW16A/13.19 BC/11.07 P
11	28090403	1	WHEEL 50XDW10A/13.19 BC/11.07 P
12	28103800	1	BUMPER PUR Ø160X161-M16 BLACK
13	28129300	1	INDUCTIVE SENSOR UNSHIELDED M12 L=1M SD=8MM
14	43000803	1	BOLT HEX M20 X 70MM DEL - FT
15	61046700	1	PIN SWING ARM NAV SUSP
16	63033703	1	AXLE INSERT NCM 44/66/9000
17	63041603	1	AXLE, 120 FIXED, NAV 6000
18	63041803	1	AXLE, 60-90 ADJUST, NAV 6000
19	70118403	1	WHEEL/TIRE 380/90R46 LH
19	70118503	1	WHEEL/TIRE 380/90R46 RH
19	70118603	1	WHEEL/TIRE 480/80R46 LH
19	70118703	1	WHEEL/TIRE 480/80R46 RH
19	70118903	1	WHEEL/TIRE 320/90R50 LH
19	70119003	1	WHEEL/TIRE 320/90R50 RH

NAVIGATOR 3000/4000 PLATFORM
E0960-HIN, 01:01:16

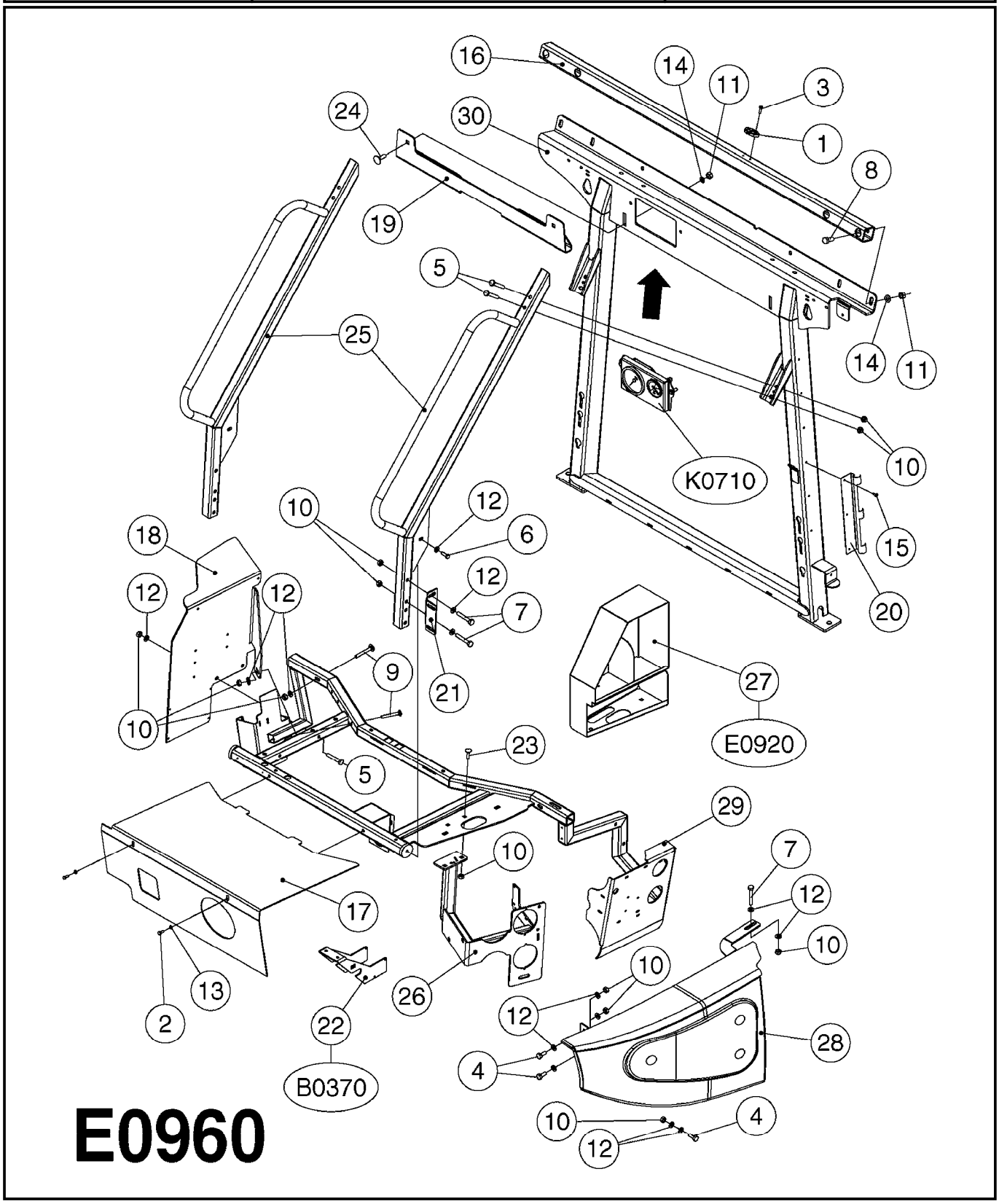

Agroparts: www.HARDI-INTERNATIONAL.com

NAVIGATOR 3000/4000 PLATFORM
E0960-HIN, 01:01:16

Date 12.08.2020 11:39

Pos.	parts-nº	order qty	description
1	334469	1	CLEVIS F.CORD TOP DRAIN ASSY.
2	410185	1	BOLT HEX 8.8 DEL M6X16
3	410362	1	BOLT HEX 8.8 SS M6X20
4	420604	1	BOLT HEX 8.8 DEL M10X25 FT DIN933
5	420906	1	BOLT HEX 8.8 DEL M10X60
6	421046	1	BOLT HEX M8X25/25 A2 SS DIN933
7	421083	1	BOLT HEX 8.8 DEL M10X65
8	430286	1	BOLT HEX 8.8 DEL M12X30 FT
9	440718	1	BOLT CRG M10 X 65 DEL
10	460423	1	NUT HEX M10X1.50 LOCK DIN985A2 SS
11	460703	1	NUT HEX M12X1.75 LOCK DIN985A2 SS
12	471122	1	WASHER, M10, Ø20/10.5X 2.0, SS
13	471124	1	WASHER, M6, Ø18/ 6.4X 1.6, SS
14	471127	1	WASHER, M12, Ø24/13X24X2.5 SS
15	480804	1	RIVET Ø4.8x14.5
16	15104700	1	TUBE 50X50 FRONT XPORT DUMMY
17	16171303	1	NAVIGATOR DECK PLATE
18	16198200	1	PLATE FOR ELECTRONICS NAV '13
19	16198400	1	TANK STOP FOR NAV. RED
20	16226200	1	BRACKET F.TANK SCALE - PAINTED
21	16229200	1	BRACKET FOR SHIELD - PAINTED
22	16244000	1	BRACKET FOR REG. NAV, PAINTED
23	44074300	1	BOLT CARRIAGE M10x30 SS
24	45001300	1	CARRIAGE BOLT M12X35 DIN603 A2
25	63058700	1	PLATFORM HANDRAIL NAV.PAINTED
26	63059900	1	BRACKET MANIFOLD GNAV PRE2009
26	63085200	1	BRACKET MANIFOLD SUCTION NAV09
27	63062300	1	SAFETYLOCKER NAVIGATOR PAINTED
28	63069600	1	LEFT SHIELD NAVIGATOR PRE2009 (2 PIECES WELDED)ONLY USE W/BKT.63059900
28	63085600	1	LEFT SHIELD NAVIGATOR MAY 2009 (SINGLE FORMED PIECE)ONLY USE W/BKT.63085200
29	63163300	1	FRAME F.FLUID COMP. '13
30	63165300	1	TRANSPORT FRAME NAV 5/6000 RED

NAVIGATOR DF4 PLATFORM
E0965-HIN, 09:06:20

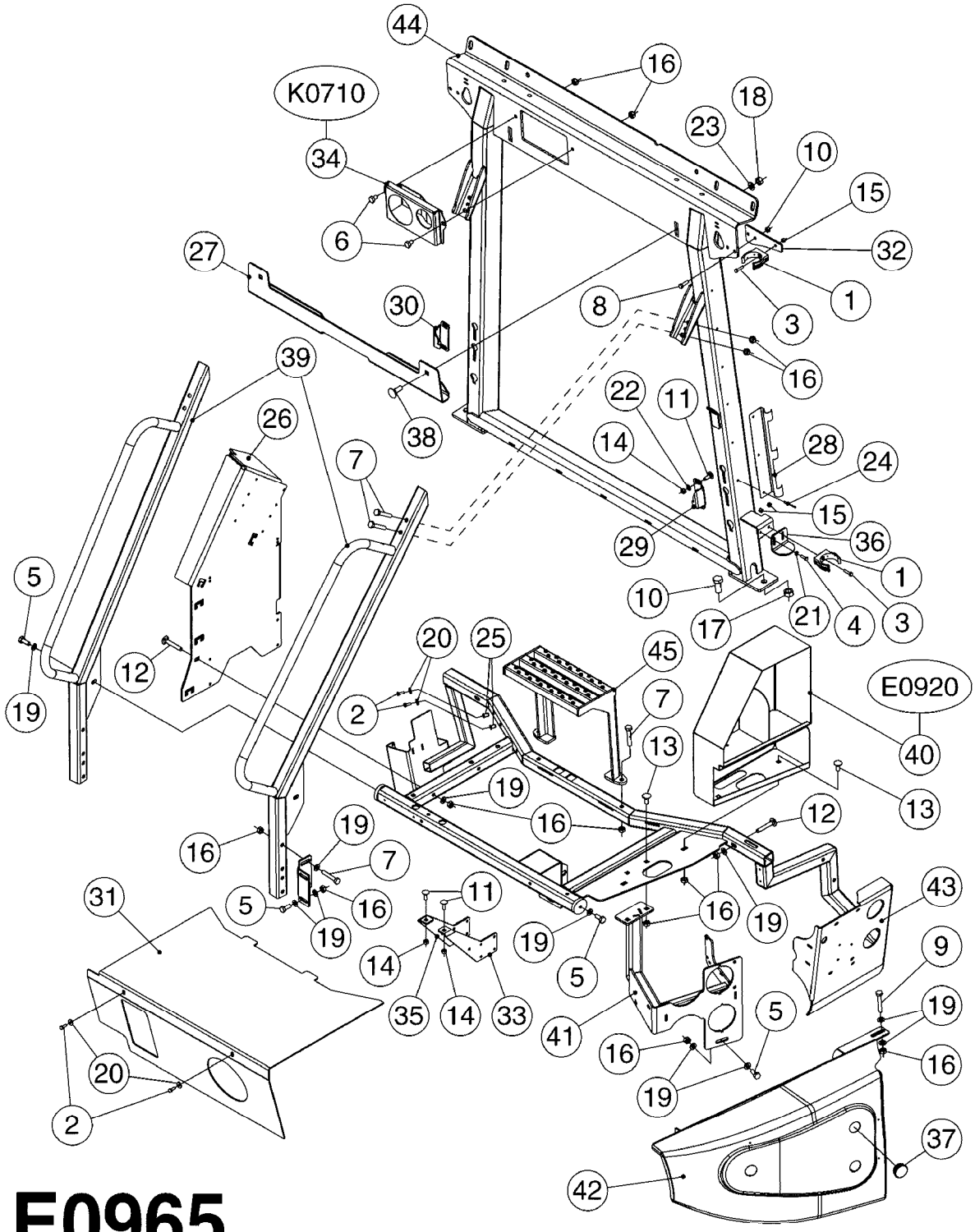

NAVIGATOR DF4 PLATFORM
E0965-HIN, 09:06:20

Date 12.08.2020 11:39

Pos.	parts-nº	order qty	description
1	334523	1	PIPE HOLDER Ø51.5
2	410185	1	BOLT HEX 8.8 DEL M6X16
3	410281	1	BOLT HEX 8.8 DEL M6X25 DIN933 A2
4	410362	1	BOLT HEX 8.8 SS M6X20
5	420604	1	BOLT HEX 8.8 DEL M10X25 FT DIN933
6	420862	1	BOLT HEX 8.8 DEL M10X16 FT
7	420906	1	BOLT HEX 8.8 DEL M10X60
8	421046	1	BOLT HEX M8X25/25 A2 SS DIN933
9	421083	1	BOLT HEX 8.8 DEL M10X65
10	430581	1	BOLT HEX 8.8 DEL M16X40 FT
11	440695	1	BOLT CARRIAGE M8X25
12	440718	1	BOLT CRG M10 X 65 DEL
13	440737	1	BOLT CARRIAGE M10x25 SS
14	460143	1	LOCK NUT M8 SST A2 DIN985
15	460261	1	NUT HEX M6X1.00 LOCK DIN985 A2 SS
16	460423	1	NUT HEX M10X1.50 LOCK DIN985A2 SS
17	460585	1	LOCKING NUT M16 DIN985 A2 SS
18	460703	1	NUT HEX M12X1.75 LOCK DIN985A2 SS
19	471122	1	WASHER, M10, Ø20/10.5X 2.0, SS
20	471124	1	WASHER, M6, Ø18/ 6.4X 1.6, SS
21	471125	1	WASHER M6U 6.4X14X1.2,A2 SS
22	471126	1	WASHER, M8, Ø16/ 8.4X 1.6, SS
23	471127	1	WASHER, M12, Ø24/13X24X2.5 SS
24	480804	1	RIVET Ø4.8x14.5
25	480811	1	BLIND FASTENER M6 STAINLESS
26	16185703	1	PLATE FOR ELECTRONICS, NAVIGATOR 2014
27	16198400	1	TANK STOP FOR NAV. RED
28	16226200	1	BRACKET F.TANK SCALE - PAINTED
29	16226400	1	PLATE, LOCK CHEEK NAV LEFT
30	16226600	1	PLATE, LOCK CHEEK NAV RIGHT
31	16230403	1	DECKPLATE F. NAV DF4, RED
32	16238803	1	PLATE, FLAT, 3/16", 60X150, RED
33	16362600	1	PLATE FOR DF4 VALVE NAV, R, RED
34	16421800	1	PLATE F. PRESS GAUGE FRONT, NAV 5/6000
35	16435200	1	PLATE FOR DF4 VALVE NAV, L, RED
36	16520500	1	ADJUSTABLE SCALE BRACKET
37	28087700	1	PLUG, ROUND, Ø42/Ø36, BLACK
38	45001300	1	CARRIAGE BOLT M12X35 DIN603 A2
39	63058700	1	PLATFORM HANDRAIL NAV.PAINTED
40	63062300	1	SAFETYLOCKER NAVIGATOR PAINTED
41	63085200	1	BRACKET MANIFOLD SUCTION NAV09
42	63085600	1	LEFT SHIELD NAVIGATOR MAY 2009
43	63163300	1	FRAME F.FLUID COMP. '13
44	63165300	1	TRANSPORT FRAME NAV 5/6000 RED
45	63168100	1	FOOTSTEP F.NAV PLATFORM
			NAV 6200 ONLY

NAVIGATOR 3000/4000 PARALIFT
E0970-HIN, 09:08:18

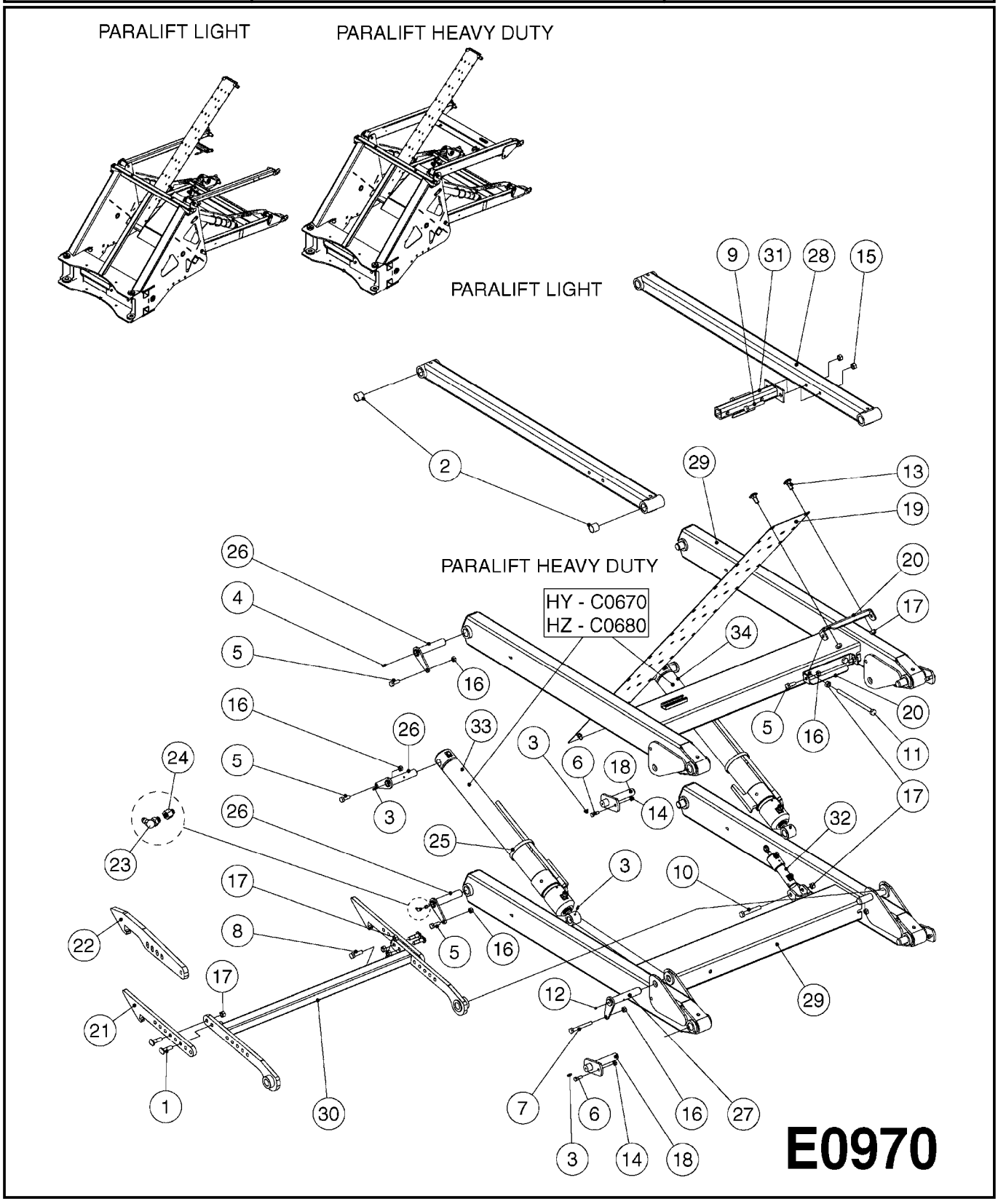

Agroparts: www.HARDI-INTERNATIONAL.com

NAVIGATOR 3000/4000 PARALIFT
E0970-HIN, 09:08:18

Date 12.08.2020 11:39

Pos.	parts-n°	order qty	description
1	140225	1	BOLT SPECIAL F.PARALIFT M12x50
2	210835	1	BUSHING D28/25 L=25
3	283699	1	GREASE NIPPLE M6X1
4	283772	1	GREASE NIPPLE M6X1 90°
5	421002	1	BOLT HEX 8.8 DEL M10X30 FT DIN933
6	421046	1	BOLT HEX M8X25/25 A2 SS DIN933
7	421218	1	BOLT HEX 8.8 DEL M10X90
8	430721	1	BOLT HEX 8.8 DEL M12X40 FT
9	430802	1	BOLT HEX 8.8 DEL M12X75
10	430846	1	BOLT HEX 8.8 DEL M12X80
11	430908	1	BOLT HEX 8.8 DEL M12X200
12	450904	1	SCREW, SET M6X6 THREADED
13	451070	1	CARRIAGE BOLT M12X30
14	460143	1	LOCK NUT M8 SST A2 DIN985
15	460386	1	NUT HEX M12X1.75
16	460423	1	NUT HEX M10X1.50 LOCK DIN985A2 SS
17	460703	1	NUT HEX M12X1.75 LOCK DIN985A2 SS
18	615654	1	PIN D25 X 123 F. PARALIFT
19	16121400	1	SHEET HOSE HOLDER PARALIFT NCM
20	16145100	1	SWIVEL FOR HOSE SUPPORT
21	16166200	1	HOOK F.TRANSP STOP W.HOLING PRE 2017
22	16260700	1	HOOK F TRANSPORT STOP(15x40x7) POST 2017
23	23002803	1	FITT, GREASE ZERK 90° 1/4-28
24	23002903	1	FITT, GREASE EXT. 6MM X1/4-28F
25	28025203	1	TIE STRAP L=23" x W=1/2"
26	61030700	1	PIN Ø25 L=117
27	61035700	1	PIN Ø25 L=125
28	63033900	1	PARALIFT ARM UPPER WWT
29	63034200	1	PARALIFT NCM 4400/6600
30	63037000	1	PARALIFT LOCK ARM NCM
31	63037500	1	HOLDER FOR CABLE SUPPORT
32	72531000	1	CYL. D25/12-50/78124200 W/FITT
33	78120600	1	CYLINDER 60/25 X 662 NAV PAR L
34	78125500	1	CYLINDER 60/25 X 662 NAV PAR R

NAVIGATOR HEAVY PUSH PARALIFT
E0975-HIN, 26:07:17

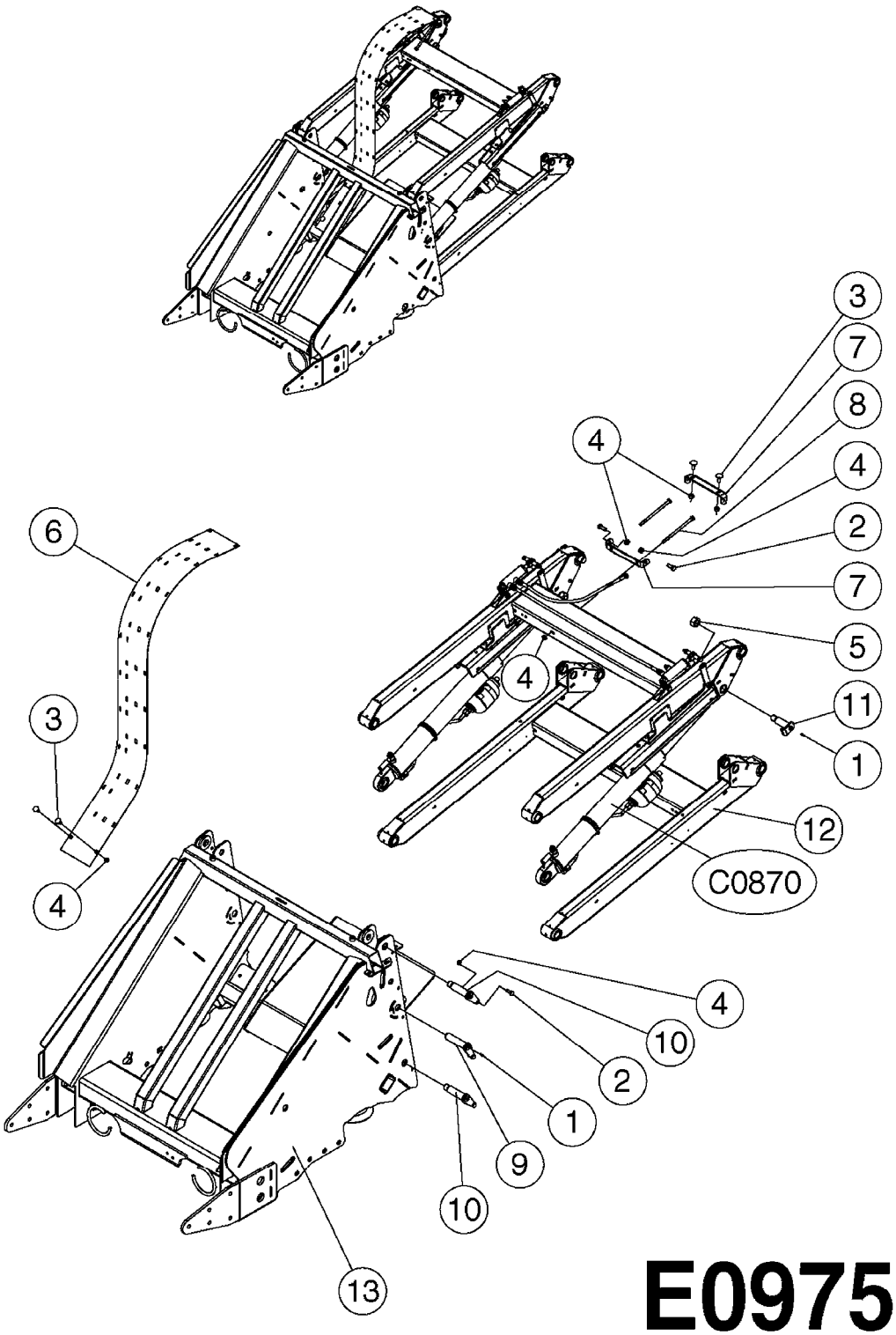

E0975

Agroparts: www.HARDI-INTERNATIONAL.com

NAVIGATOR HEAVY PUSH PARALIFT
E0975-HIN, 26:07:17

Date 12.08.2020 11:39

Pos.	parts-nº	order qty	description
1	283699	1	GREASE NIPPLE M6X1
1	28112100	1	GREASE FITTING Ø6 90GR M6
2	420604	1	BOLT HEX 8.8 DEL M10X25 FT DIN933
3	440737	1	BOLT CARRIAGE M10x25 SS
4	460423	1	NUT HEX M10X1.50 LOCK DIN985A2 SS
5	460747	1	NUT HEX M24 LOCK
6	16121400	1	SHEET HOSE HOLDER PARALIFT NCM
7	16145100	1	SWIVEL FOR HOSE SUPPORT
8	42126400	1	BOLT HEX M10X180 A4-80
9	61030700	1	PIN Ø25 L=117
10	61056500	1	PIN Ø30/Ø25 L=122
11	61061200	1	PIN, Ø30/M24 L=105
12	63096000	1	Paralift Arm CM11 RED
13	63144300	1	REAR CHASSIS F.NAV. '13 RED

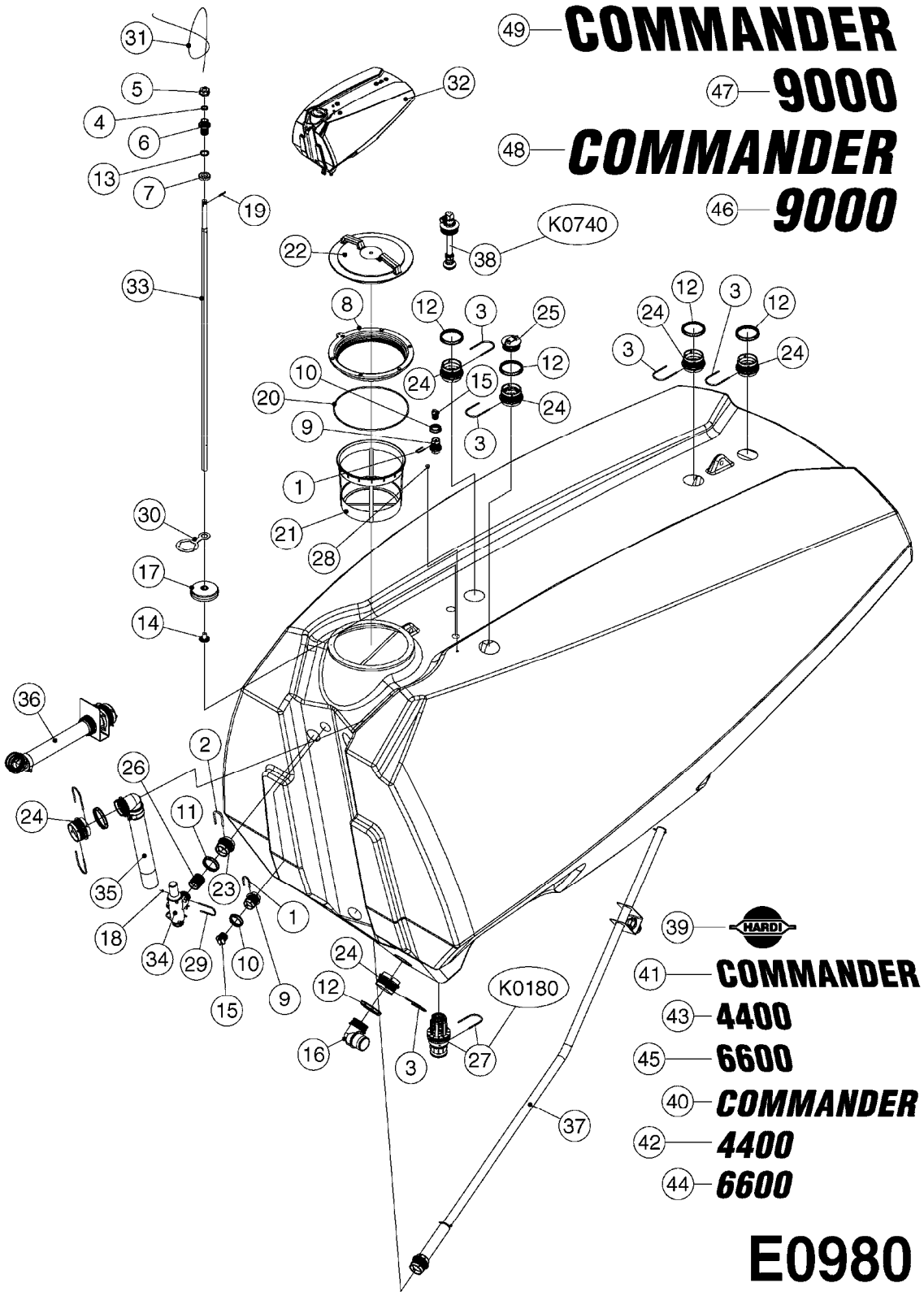
49 COMMANDER
47 9000
48 COMMANDER
46 9000
K0740
K0180
39 HARDI
41 COMMANDER
43 4400
45 6600
40 COMMANDER
42 4400
44 6600
E0980

Agroparts: www.HARDI-INTERNATIONAL.com

TANK NCM 4400/6600/9000
E0980-HIN, 01:01:16

Date 12.08.2020 11:39

Pos.	parts-nº	order qty	description
1	145994	1	FITT.DK S-40 FORK
2	145996	1	FITT.DK S-67 FORK
3	145997	1	FITT.DK S-93 FORK
4	242309	1	SEAL Ø22 ID Ø30 OD X 4 HIGH
5	320095	1	FITT.DK NUT 1" BSP
6	320456	1	FITT.DK BULKHEAD 1"BSP DOUBLE
7	320471	1	FITT.DK NUT 1" BSP JAMB
8	322097	1	THREADED RING F. LID
9	322102	1	FITT.DK S-40 BULKHEAD
10	322106	1	FITT.DK S-40 BULKHEAD NUT
11	322108	1	FITT.DK S-67 BULKHEAD NUT
12	322109	1	FITT.DK S-93 BULKHEAD NUT
13	332577	1	O-RING D38/D30X4 F.1" PUR.
14	333864	1	GUIDE F. SAFETY VALVE SPRING
15	334248	1	FITT.DK S-40 PLUG
16	334340	1	FITT.DK S-93 ELBOW 2.5"
17	334515	1	FLOATER FOR LIQUID LEVEL
18	461217	1	NUT HEX M5 LOCK
19	480717	1	PIN E 5X40 SST
20	614588	1	SEAL F. LID
21	614602	1	FILTER BASKET
22	726003	1	LID F. TANK
23	726464	1	FITT.DK S-67 BULKHEAD W/GASKET
24	726465	1	FITT.DK S-93 BULKHEAD W/GASKET
25	726580	1	FITT. S93 PLUG W/O-RING
26	728526	1	FITT.DK S-67 CONNECT W/O-RINGS
27	730084	1	BOTTOM VALVE S93 2"RG-3M
28	14001500	1	GROMMET F.TOP DRAIN CORD
29	14012200	1	FITT.DK S-67 FORK W/M5 THREADS
30	16025500	1	TANK SPACER SIGHT GAUGE
31	28034100	1	CABLE F.LIQUID LEVEL IND. SS L=5M
32	35002004	1	TANK RAW 9000 NCM
32	73128700	1	TANK CM 4400 '15 ASSEMBLY
32	72265500	1	TANK NCM 6600 ASSEMBLY
33	61036700	1	GUIDE TUBE F.FLOATER, L=1850, NV4000/CM4400
33	61038600	1	GUIDE TUBE F.FLOAT NCM 9000
33	61038700	1	GUIDE TUBE F.FLOAT NCM 6600
34	72280300	1	SAFTY VALVE S67 15 BAR CM'05
35	72317500	1	SUCT. HOSE 2-1/2"X1100 S39/90
36	72317600	1	SUCT. HOSE 2"X900/S39-S93
37	72356900	1	PRESSURE AGITATION CM 6600
37	72538900	1	PRESSURE AGITATION CM 4400
38	72358000	1	TANK RINSE LOW MOD.ASSMBLY NCM
39	97811600	1	DECAL COMPANY 335MM X 210MM
40	97811700	1	DECAL COMMANDER LEFT HAND
41	97811800	1	DECAL COMMANDER RIGHT HAND
42	97812100	1	DECAL 4400 LEFT HAND
43	97812200	1	DECAL 4400 RIGHT HAND
44	97813800	1	DECAL 6600 LEFT HAND
45	97813900	1	DECAL 6600 RIGHT HAND
46	97815000	1	DECAL 9000 LEFT
47	97815100	1	DECAL 9000 RIGHT
48	97815200	1	DECAL COMMANDER LEFT 145%
49	97815300	1	DECAL COMMANDER RIGHT 145%

	Agroparts: www.HARDI-INTERNATIONAL.com	
HARDI	LOCKER & CLEAN WATER TANK NCM E0990-HIN, 15:05:19	Page 0 Date 12.08.2020 11:39

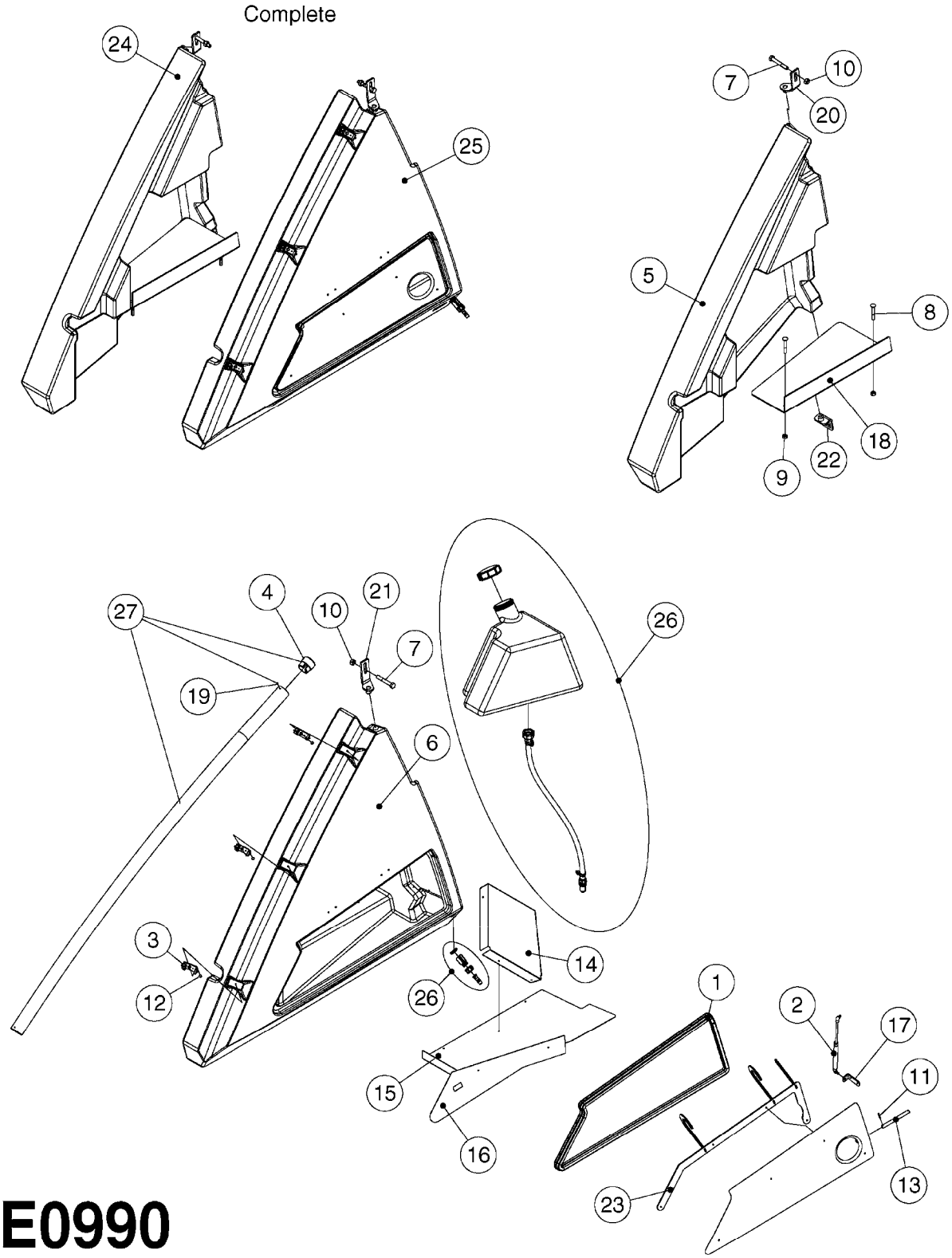

E0990

Agroparts: www.HARDI-INTERNATIONAL.com

LOCKER & CLEAN WATER TANK NCM
E0990-HIN, 15:05:19

Date 12.08.2020 11:39

Pos.	parts-nº	order qty	description
1	242474	1	SEAL 16X28XL=' LOCKER DOOR CM+
2	285793	1	GAS CYLINDER
3	334523	1	PIPE HOLDER Ø51.5
4	334850	1	GUIDE F. SIGHT GAUGE TUBE TOP
5	351766	1	SIDE SHIELD MOUNT RIGHT
6	351767	1	SIDE SHIELD MOUNT LEFT
7	430846	1	BOLT HEX 8.8 DEL M12X80
8	440718	1	BOLT CRG M10 X 65 DEL
9	460423	1	NUT HEX M10X1.50 LOCK DIN985A2 SS
10	460703	1	NUT HEX M12X1.75 LOCK DIN985A2 SS
11	480141	1	PIN COTTER M4X20
12	480809	1	BLIND RIVET, EMHART ACD616ASM
13	15057800	1	HANDLE F.LEFT SIDE LOCKER
14	16124500	1	DIVIDER F.LOCKER L.SIDE SHIELD
15	16124600	1	SHELF FLOOR-LEFT SIDE LOCKER
16	16124700	1	SHELF WALL-LEFT SIDE LOCKER
17	16126900	1	BRACKET F.DOOR-STORAGE LOCKER
18	16127300	1	SHELF FLOOR-RIGHT SIDE LOCKER
19	44075300	1	SCREW 3.5X9.5SS/X15 ISO 14585C
20	61033900	1	BRACKET F. SIDE PANEL R.H. NCM
21	61034000	1	BRACKET F. SIDE PANEL L.H. NCM
22	61037500	1	ADJUSTING BRACKET, BOTTOM NCM
23	63037800	1	BRACKET F.DOOR-STORAGE LOCKER
24	72280100	1	SIDE SHIELD RIGHT NCM COMPLETE
25	72280200	1	SIDE SHIELD LEFT+CLEAN W.TANK
26	72280600	1	CLEAN W.TANK LEFT SIDE NCM
27	72282800	1	SIGHT GAUGE W/SCALE NCM4400 LITER PRE'15 TUBE LENGTH = 75"
27	72357100	1	SIGHT GAUGE W/SCALE NCM6600 LITER
27	72358300	1	SIGHT GAUGE TUBE 85/90/10000 L=2382 BENT
27	72440100	1	SIGHT GAUGE W/SCALE,CM6600 GAL
27	72932100	1	SIGHT GAUGE TUBE W/DECAL CM4400/4500 GAL PRE'15 TUBE LENGTH = 75"
27	73125500	1	SIGHT GAUGE W/SCALE,CM4500 '15 LITER POST'15 TUBE LENGTH = 82"
27	73277500	1	SIGHT GAUGE W/SCALE,CM4500 '15 GAL POST'15 TUBE LENGTH = 82"
27	97610003	1	DECAL SIGHT GAUGE NCM 9000 GAL

	Agroparts: www.HARDI-INTERNATIONAL.com	
HARDI	SHIELDS NCM 4400/6600/9000 E1000-HIN, 01:01:16	Page 0 Date 12.08.2020 11:39

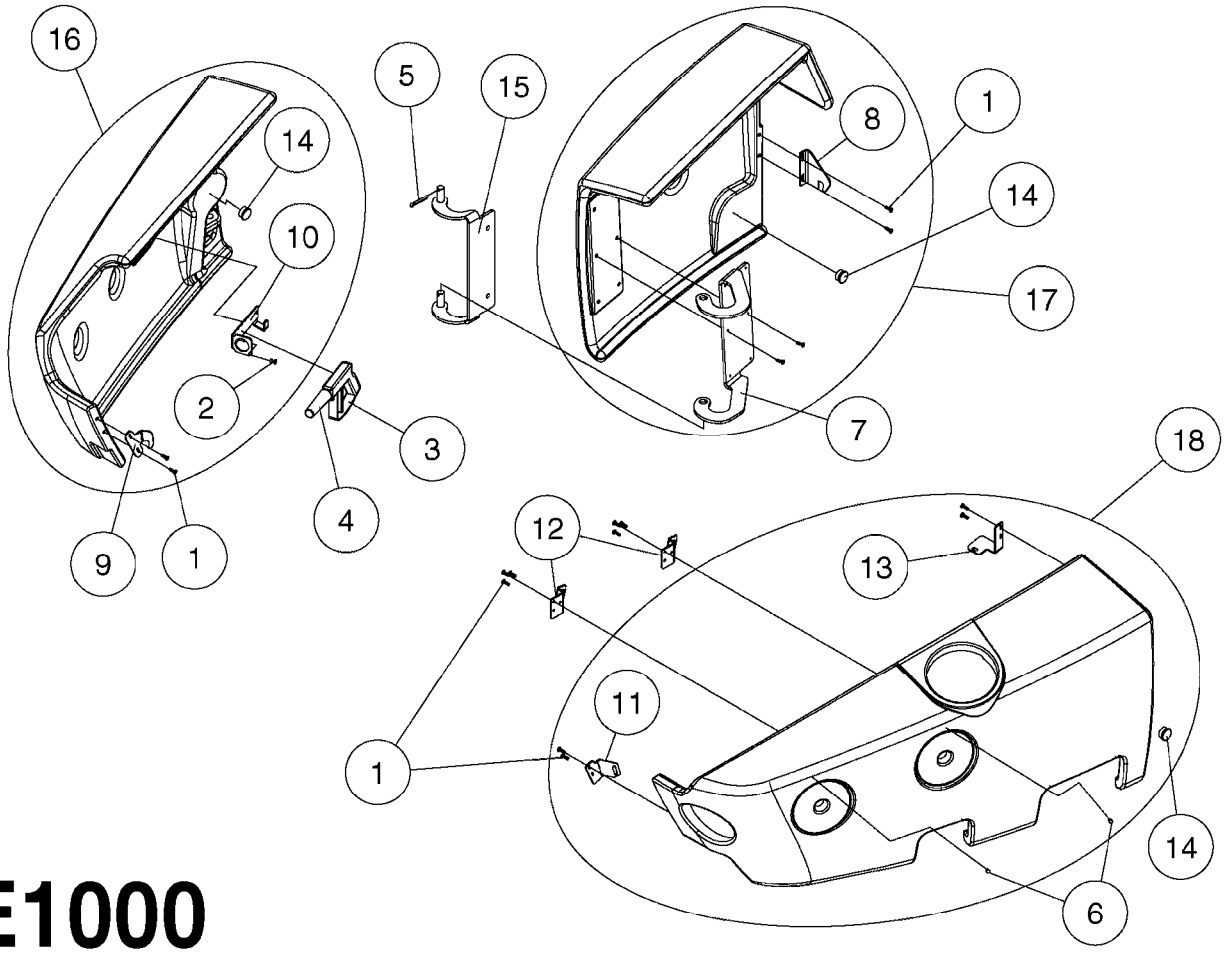

E1000

Agroparts: www.HARDI-INTERNATIONAL.com

SHIELDS NCM 4400/6600/9000
E1000-HIN, 01:01:16

Date 12.08.2020 11:39

Pos.	parts-nº	order qty	description
1	440719	1	SCREW F.PLASTIC KB60x20 SS
2	480809	1	BLIND RIVET, EMHART ACD616ASM
3	725663	1	PISTOL 60 COVER PART
4	725664	1	FRONTPART F.SPRAY GUN MODEL 60
5	10008603	1	COTTER PIN 1/8"X 1-1/2"
6	14042800	1	INDICATOR FOR VALVE POSITION
7	16133800	1	HINGE F.GREY SHIELD CM '05
8	16133900	1	HOOK F.GREY SHIELD CM '05
9	16134000	1	BKT F. FRONT RH COVER NCM
10	16134100	1	BRACKET. HAND GUN HOLDER NCM
11	16135300	1	BKT F. FRONT LH COVER NCM
12	16135400	1	MIDDLE HANGER LEFT GRAY SIDE
13	16135500	1	BKT F. FRONT LH COVER NCM
14	28046900	1	COVER PLUG 1" BLACK
15	61035500	1	HINGE BRACKET FOR CM05 LOCKER
16	72294000	1	SHEILD R.H.FRONT ASSM. NCM
17	72294100	1	SHEILD R.H. CHEM-LOCKER ASSM.
18	72294900	1	SHEILD L.H.FRONT ASSM. NCM

FRAME - NCM 4400/6600
E1010-HIN, 20:01:20

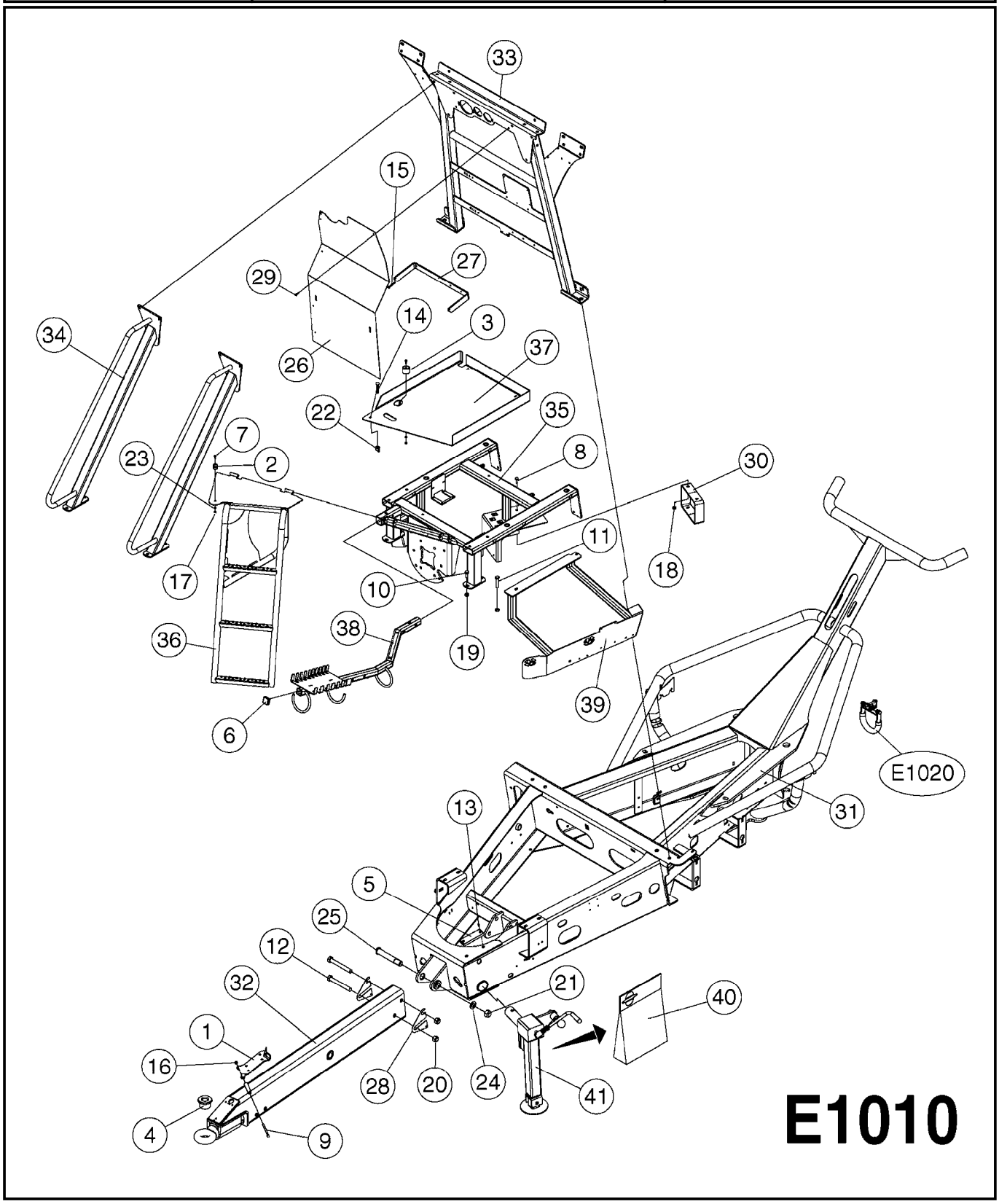

FRAME - NCM 4400/6600
E1010-HIN, 20:01:20

Date 12.08.2020 11:39

Pos.	parts-nº	order qty	description
1	161923	1	SUPPORT PLATE F. PTO CM+
2	242567	1	DOOR STOP, MALE
3	242568	1	DOOR STOP, FEMALE
4	14011603	1	BUSHING, DRAWBAR, 1.5"
4	270608	1	BUSHING F. DRAWBAR NCM Ø50/Ø33
5	334135	1	SLIDE SHOE 140X45X15
6	334571	1	PLUG 40x40x2 F.SQ.TUBE
7	410185	1	BOLT HEX 8.8 DEL M6X16
8	421002	1	BOLT HEX 8.8 DEL M10X30 FT DIN933
9	421232	1	BOLT HEX 8.8 DEL M8X110
10	430286	1	BOLT HEX 8.8 DEL M12X30 FT
11	430438	1	BOLT HEX 8.8 DEL M12X65
12	430886	1	BOLT HEX 8.8 DEL M20X160
13	440708	1	SCREW M5.5X16 SELF TAPPING SS
14	440718	1	BOLT CRG M10 X 65 DEL
15	450402	1	BOLT HEX M6X50
16	460143	1	LOCK NUT M8 SST A2 DIN985
17	460261	1	NUT HEX M6X1.00 LOCK DIN985 A2 SS
18	460423	1	NUT HEX M10X1.50 LOCK DIN985A2 SS
19	460703	1	NUT HEX M12X1.75 LOCK DIN985A2 SS
20	460806	1	NUT HEX M20X2.50 LOCK DIN985A2 SS
21	461316	1	NUT HEX LOCK M30X3.5 DIN 985
22	461324	1	NUT WING M10 STAINLESS STEEL
23	471125	1	WASHER M6U 6.4X14X1.2,A2 SS
24	471131	1	WASHER, M30, Ø56/31.0X 4.0, SS
25	14033300	1	PIN D30.0 F. DRAWBAR NCM
26	16128300	1	COVER F. EL-BOX. NCM 4400
26	16156000	1	COVER F. EL-BOX. NCM 6600
27	16128600	1	BRACKET F. COVER PLATE NCM
28	16144700	1	SHIM F. DRAWBAR NCM4400
29	45001500	1	SCREW THUMB PLASTIC HEAD M6x20
30	61018703	1	BRKT, ACE 650, COMMANDER
			MOUNT BRACKET FOR ACE 650 PUMP
31	63033300	1	FRAME NCM 4400 PAINTED
31	63043300	1	FRAME NCM 6600 PAINTED
32	63033500	1	DRAWBAR SWIVEL D50 NCM 4400
33	63033600	1	TRANSPORT FRAME NCM 4400
33	63043600	1	TRANSPORT FRAME NCM 6600
34	63033700	1	HANDRAIL FOR PLATFORM PAINTED
35	63034100	1	MOUNT PLATFORM NCM 4400
35	63043700	1	MOUNT PLATFORM NCM 6600
36	63035700	1	STEP FOR NCM 4400/6600
37	63035800	1	DECKPLATE F.PLATFORM NCM 4400
37	63043800	1	DECKPLATE F.PLATFORM NCM 6600
38	63038700	1	HOSE & CABLE SUPPORT NCM
39	63040500	1	VALVE CONSOLE PAINTED
40	72280700	1	REPAIR KIT F.JACK STAND
41	72280900	1	JACK STAND F. NCM4400 COMP.

HARDI	**Agroparts: www.HARDI-INTERNATIONAL.com**	
	SWIVEL HOSE GUARD E1020-HIN, 17:11:16	Page 0 Date 12.08.2020 11:39

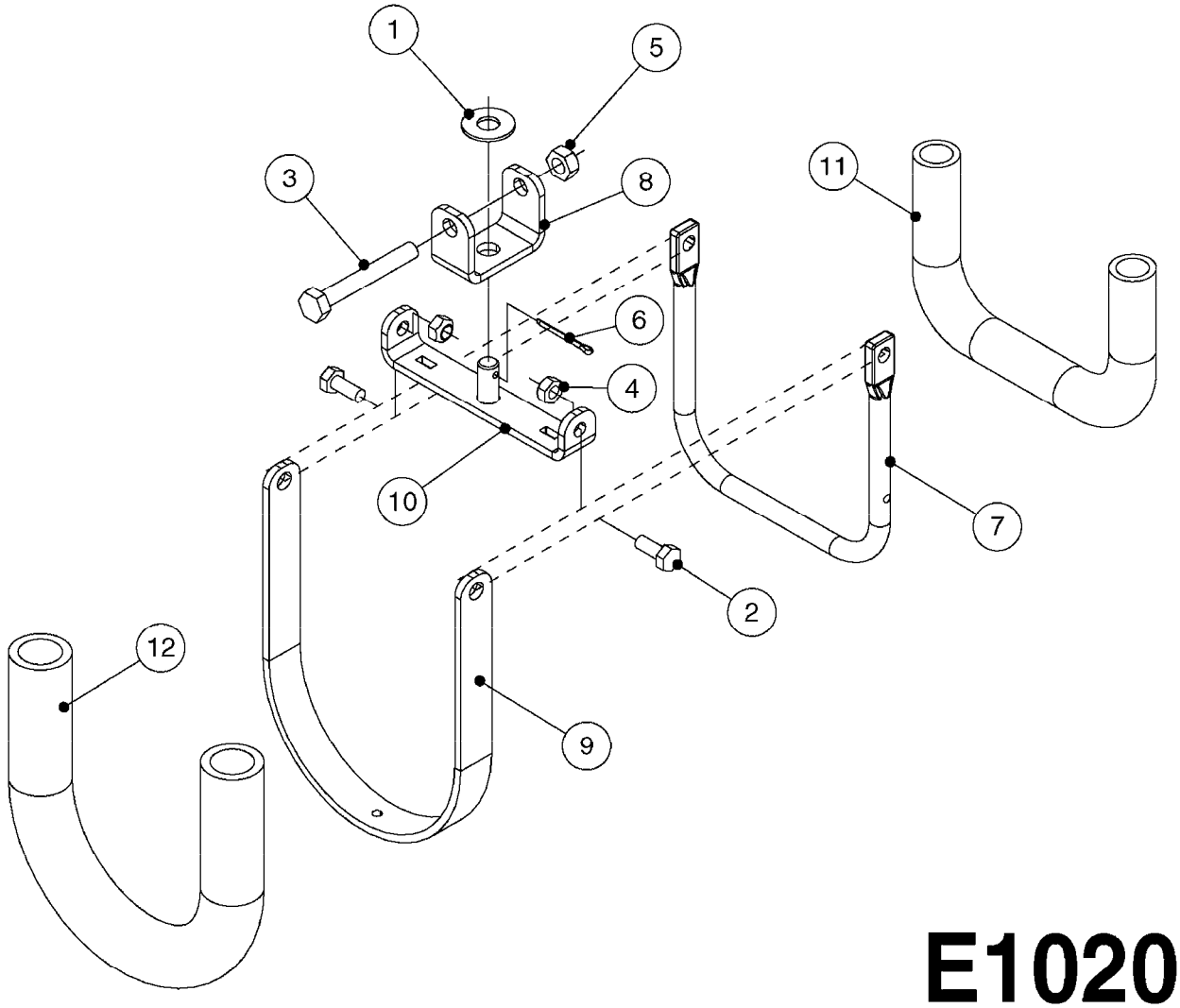

Agroparts: www.HARDI-INTERNATIONAL.com

SWIVEL HOSE GUARD
E1020-HIN, 17:11:16

Date 12.08.2020 11:39

Pos.	parts-nº	order qty	description
1	165557	1	WASHER D28.0/D12.2X2.0 SS
2	421046	1	BOLT HEX M8X25/25 A2 SS DIN933
3	421222	1	BOLT HEX 8.8 DEL M10X75 FT
4	460143	1	LOCK NUT M8 SST A2 DIN985
5	460423	1	NUT HEX M10X1.50 LOCK DIN985A2 SS
6	480126	1	PIN COTTER M4X30
7	15118200	1	HOSE & TUBE HOLDER NCM
8	16143600	1	HOSE AND CABLE HOLDER TOP
9	16160900	1	HOSE AND CABLE GUARD 160X502MM
9	16187700	1	HOSE AND CABLE GUARD 160X402MM
10	61042200	1	HOSE AND CABLE HOLDER PIVOT
11	92703203	1	HOSE R X3/4" X300PSI WP X0012"
12	92712403	1	HOSE R X1" X300PSI WP X0012"

HYD. DRAWBAR - NCM 6600
E1030-HIN, 07:02:19

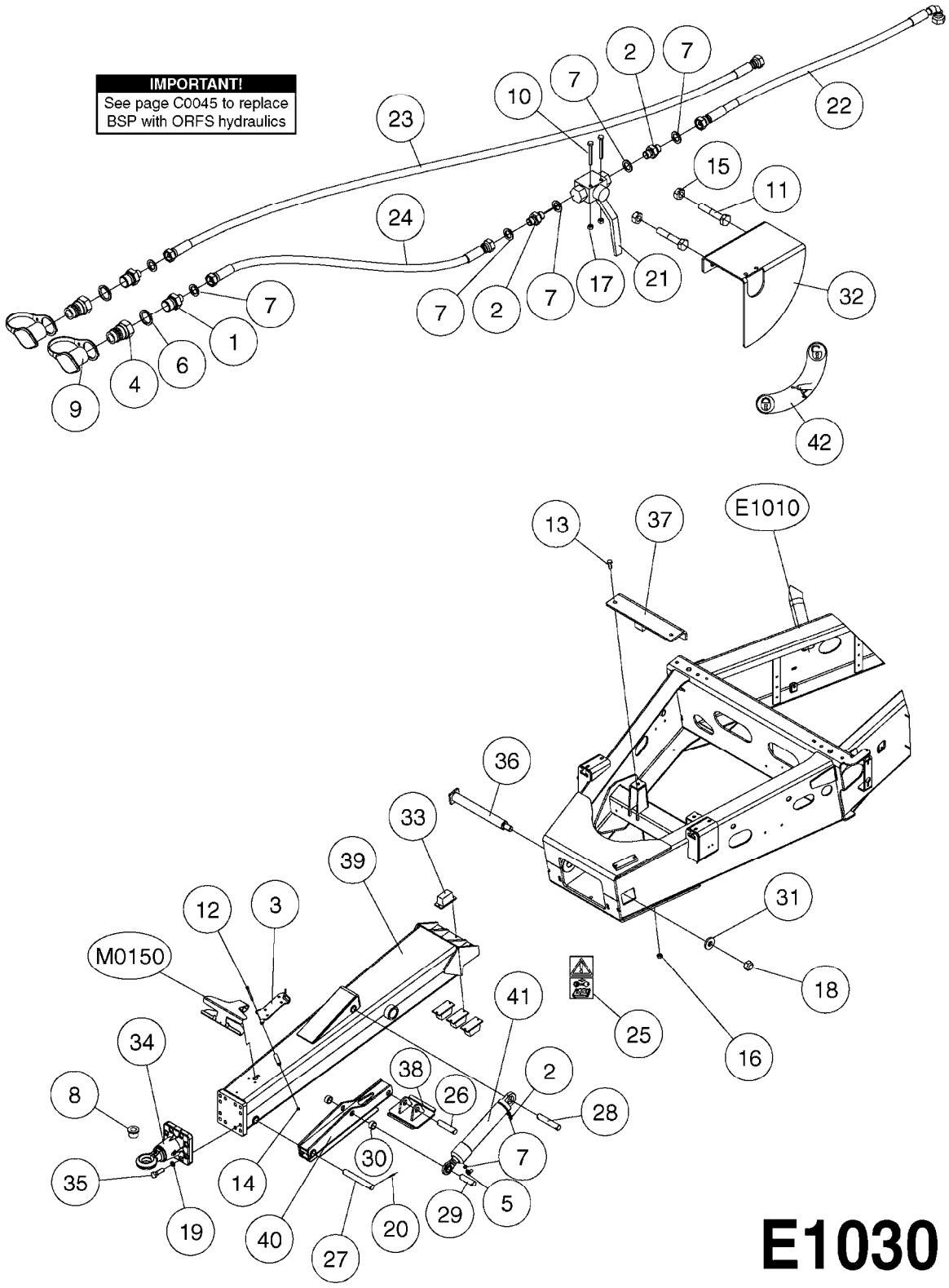

Agroparts: www.HARDI-INTERNATIONAL.com

HYD. DRAWBAR - NCM 6600
E1030-HIN, 07:02:19

Date 12.08.2020 11:39

Pos.	parts-n°	order qty	description
1	146846	1	HEX NIPPLE 1/2" X 1/4"
2	146851	1	HEX NIPPLE 1/4"x1/4" 0.7MM
3	161923	1	SUPPORT PLATE F. PTO CM+
4	230311	1	QUICK COUPLING 1/2"
5	232294	1	HYD.FITTING 1/4"X1/4"
6	241356	1	DOWTYSEAL 1/2"
7	241404	1	DOWTY SEAL 1/4"
8	270608	1	BUSHING F. DRAWBAR NCM Ø50/Ø33
9	334206	1	DUST HOOD FOR HY-COUPLING
10	421142	1	BOLT HEX 8.8 DEL M5X40
11	421224	1	BOLT HEX 8.8 DEL M10X55
12	421232	1	BOLT HEX 8.8 DEL M8X110
13	430581	1	BOLT HEX 8.8 DEL M16X40 FT
14	460143	1	LOCK NUT M8 SST A2 DIN985
15	460423	1	NUT HEX M10X1.50 LOCK DIN985A2 SS
16	460585	1	LOCKING NUT M16 DIN985 A2 SS
17	461217	1	NUT HEX M5 LOCK
18	461316	1	NUT HEX LOCK M30X3.5 DIN 985
19	471180	1	LOCK WASHER NORDLOCK M20 ELZ
20	480733	1	PIN D6 X 40
21	781049	1	HYD. BALL VALVE
22	784001	1	HOSE HY X 1/4 X 067.00"STR+ELB
23	784143	1	HOSE HY X 1/4 X 138" STR+STR
24	784161	1	HOSE HY X 1/4 X 59" STR+STR
25	978436	1	DECAL - WARNING! SERVICE
26	14047100	1	PIN D30.0 L= 132 /D6.0
27	14047200	1	PIN D30.0 L= 223 /D6.0
28	14047300	1	PIN D30.0 L= 161 /D6.0
29	14047400	1	PIN D30.0 L= 104 /D6.0
30	15073000	1	THREADED PIPE 1-1/4" L=20
31	16155900	1	DISC D70.0/ 31.0X10.0/RED
32	16160000	1	PLATE F. HYD. VALVE CM66/9000
33	24267600	1	RUBBERSTOP 15/238 T=56 SS
34	28164100	1	SWIVEL HITCH D50/8 BOLT
35	43000803	1	BOLT HEX M20 X 70MM DEL - FT
36	61037800	1	PIN F. STEERING 6600
37	61038500	1	BRACKET FOR DRAWBAR NCM 6600
38	61039700	1	FOOT F. HYD. JACK NCM6600
39	63043900	1	DRAWBAR ADJUSTABLE CM6600
40	63045400	1	SUPPORT LEG HYD. JACK 6600
41	78134000	1	DOB.CYL.Ø70/40-322 TRACK LEFT '15
42	97814500	1	DECAL JACK STAND LOCK VALVE

FRAME - REAR W/PARALIFT NCM
E1040-HIN, 09:09:16

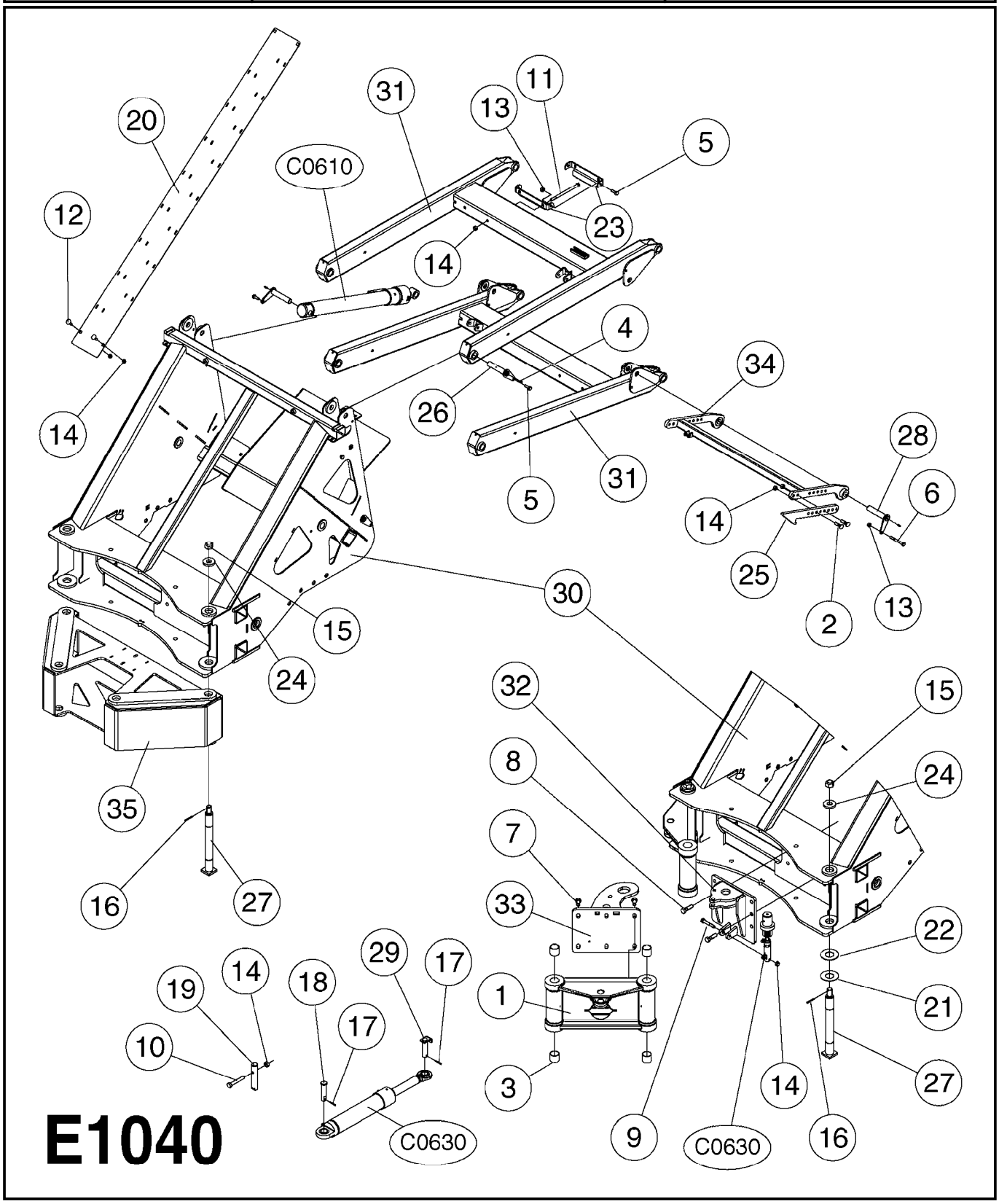

Agroparts: www.HARDI-INTERNATIONAL.com

FRAME - REAR W/PARALIFT NCM
E1040-HIN, 09:09:16

Date 12.08.2020 11:40

Pos.	parts-nº	order qty	description
1	111708	1	STEER ARM NCM 4400 PAINTED RED
1	111710	1	STEER ARM NCM 6600 PAINTED RED
2	140225	1	BOLT SPECIAL F.PARALIFT M12x50
3	210776	1	BUSHING F.TWIN STEERING ARM NCM 6600
3	210865	1	BUSHING 40mm40mm DU NCM 4400
4	283699	1	GREASE NIPPLE M6X1
5	421002	1	BOLT HEX 8.8 DEL M10X30 FT DIN933
6	421218	1	BOLT HEX 8.8 DEL M10X90
7	430684	1	BOLT HEX 8.8 DEL M16X30 FT NCM 4400
7	45001800	1	SCREW ALLEN M20X45 12.9 DE NCM 6600
8	430765	1	BOLT HEX 8.8 DEL M16X55
9	430802	1	BOLT HEX 8.8 DEL M12X75
10	430846	1	BOLT HEX 8.8 DEL M12X80
11	430908	1	BOLT HEX 8.8 DEL M12X200
12	451070	1	CARRIAGE BOLT M12X30
13	460423	1	NUT HEX M10X1.50 LOCK DIN985A2 SS
14	460703	1	NUT HEX M12X1.75 LOCK DIN985A2 SS
15	460747	1	NUT HEX M24 LOCK NCM 4400
15	461316	1	NUT HEX LOCK M30X3.5 DIN 985 NCM 6600
16	480384	1	PIN COTTER 3/16 x 1-1/2"
17	480502	1	PIN RETAINING M10X50 DIN 1481
18	14033600	1	PIN Ø40/Ø29.8 Ø10 L=133 NCM 4400
19	14051400	1	PIN Ø35.1/Ø12 L=164 NCM 6600
20	16121400	1	SHEET HOSE HOLDER PARALIFT NCM
21	16125200	1	DISC D90/42 X 2 RED NCM 4400
21	16155700	1	DISC D115/52 X 2 RED NCM 6600
22	16125300	1	DISC D90/42 X 3 RED NCM 4400
22	16155800	1	DISC D115/52 X 3 RED NCM 6600
23	16145100	1	SWIVEL FOR HOSE SUPPORT
24	16155900	1	DISC D70.0/ 31.0X10.0/RED NCM 6600
24	16375500	1	WASHER 10.0X60X25 RED NCM4400
25	16166200	1	HOOK F.TRANSP STOP W.HOLING
25	16193500	1	HOOK F.PARALIFT LOCK SHORT NCM
26	61030700	1	PIN Ø25 L=117
27	61033700	1	PIN F. STEERING 4400
27	61037800	1	PIN F. STEERING 6600
28	61035700	1	PIN Ø25 L=125
29	61036400	1	PIN D29.8 L=97 NCM 4400
29	61038100	1	PIN D34.8 NCM 6600
30	63033400	1	REAR FRAME NCM 4400 PAINTED
30	63043400	1	REAR FRAME NCM 6600 PAINTED
31	63034200	1	PARALIFT NCM 4400/6600
32	63036100	1	CONSOLE F. TRAPEZE LOCK CM "05

Pos.	parts-nº	order qty	description
33	63036200	1	LATCH F. TRAPEZE LOCK CM "05" NCM 4400
33	63044000	1	LATCH F. TRAPEZE LOCK CM6600
34	63037000	1	PARALIFT LOCK ARM NCM
35	63037700	1	MOUNT FOR REAR FRAME NCM 4400
35	63046000	1	MOUNT FOR REAR FRAME NCM 6600

	Agroparts: www.HARDI-INTERNATIONAL.com	
HARDI	COMMANDER 4400-7000 NON-SUSPEND.AXLE E1050-HIN, 01:01:16	Page 0 Date 12.08.2020 11:40

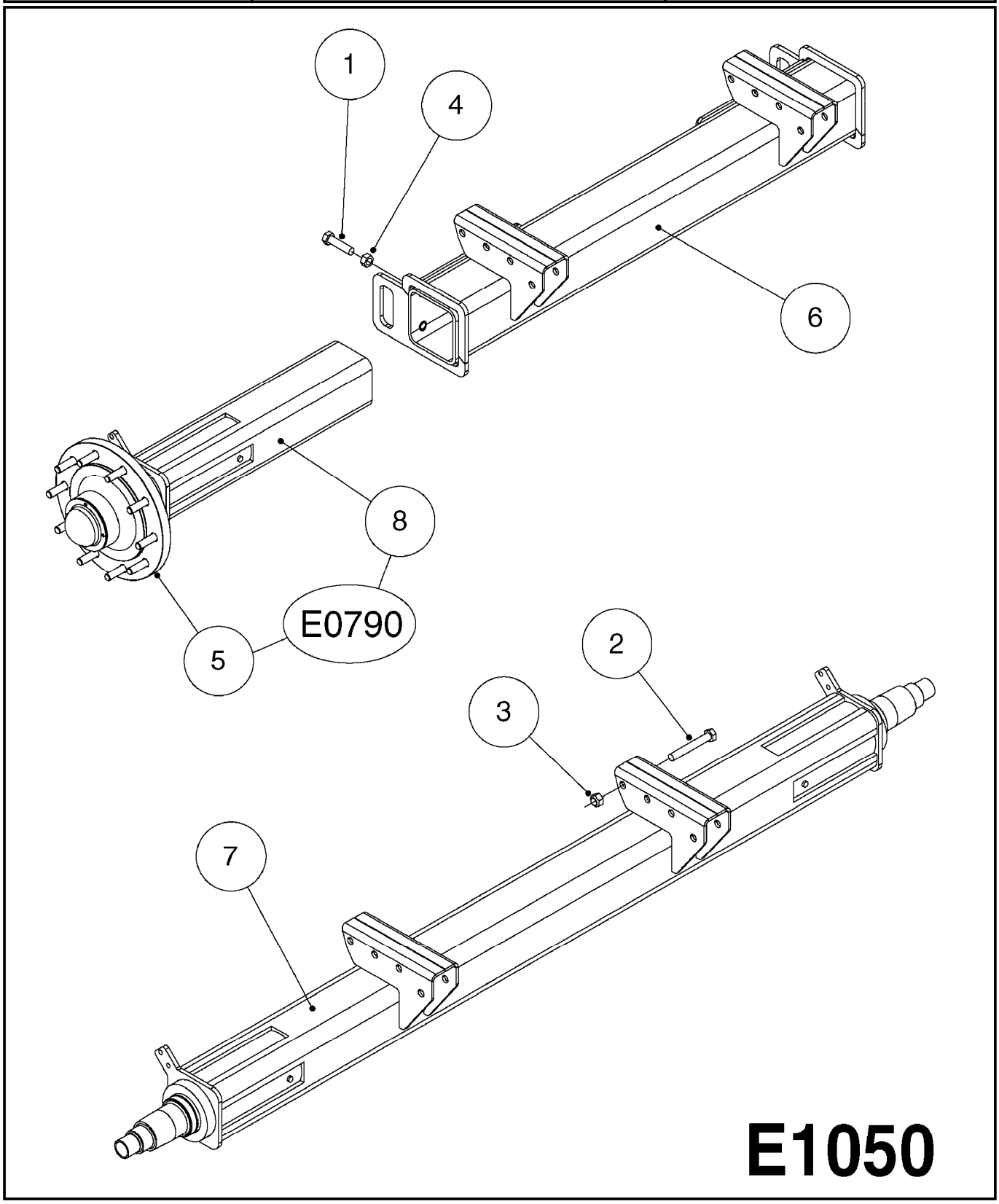

Agroparts: www.HARDI-INTERNATIONAL.com

COMMANDER 4400-7000
NON-SUSPEND.AXLE
E1050-HIN, 01:01:16

Date 12.08.2020 11:40

Pos.	parts-nº	order qty	description
1	430920	1	BOLT HEX M20x80MM
2	430979	1	BOLT HEX M20x140 8.8 DELTA
3	460806	1	NUT HEX M20X2.50 LOCK DIN985A2 SS
4	461228	1	NUT HEX M20
5	28045703	1	HUB ASSY 10-13.19-11.02 25000#
6	63024303	1	AXLE W/M NON SUSP. ADJ. CM"05"
7	63033603	1	AXLE NON-SUSPENDED NCM 44 120"
8	63033703	1	AXLE INSERT NCM 44/66/9000

HARDI	**Agroparts: www.HARDI-INTERNATIONAL.com**	
	COMMANDER 4400-7000 SUSPENDED AXLE E1060-HIN, 02:04:19	Page 0 Date 12.08.2020 11:40

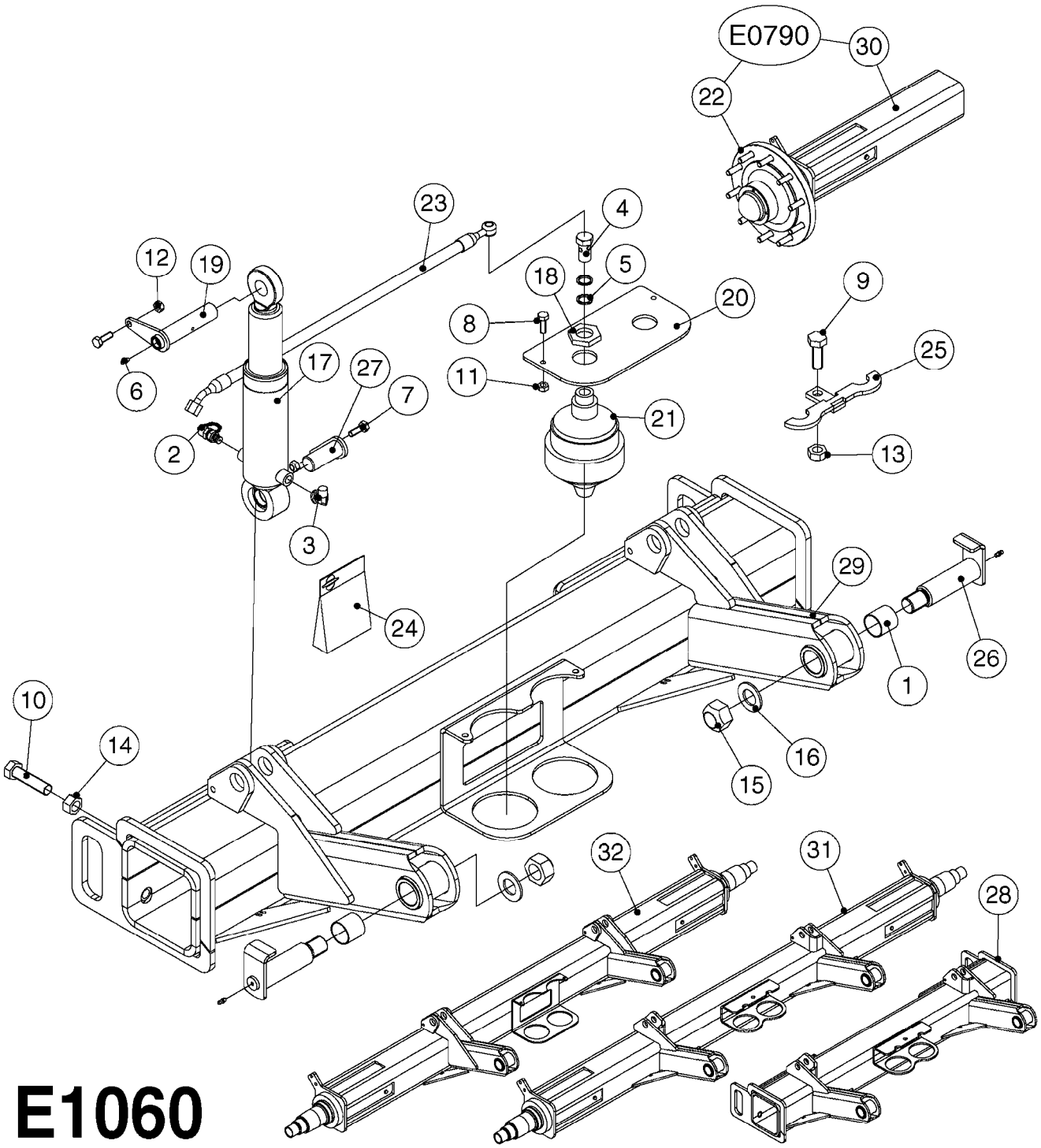

E1060

COMMANDER 4400-7000 SUSPENDED AXLE
E1060-HIN, 02:04:19

Date 12.08.2020 11:40

Pos.	parts-n°	order qty	description
1	210863	1	BUSHING DU FLNG. D40/44 L=26 4400 & 4500
1	210865	1	BUSHING 40mm40mm DU 5500, 6600 & 7000
2	231955	1	NIPPLE F. PRESS GAUGE 1/4" BSP
3	232278	1	NIPPLE 3/8"/90° W. UNION NUT 4400 & 4500 BSP
3	232293	1	ELBOW 90° 1/2"x1/2" 5500, 6600 & 7000 BSP
3	23232500	1	HYD.FIT. M-M 90° 3/8"-11/16" 4400 & 4500 ORFS
3	23242100	1	HYD.FIT. M-M 90° 1/2"-13/16" 5500, 6600 & 7000 ORFS
4	232291	1	BANJO BOLT 1/2" BSP
5	241356	1	DOWTYSEAL 1/2"
6	283699	1	GREASE NIPPLE M6X1
7	421002	1	BOLT HEX 8.8 DEL M10X30 FT DIN933 4400 & 4500
7	421105	1	M10X45 MACHINE SCREW STAINLESS 5500, 6600 & 7000
8	421046	1	BOLT HEX M8X25/25 A2 SS DIN933 5500, 6600 & 7000
9	430581	1	BOLT HEX 8.8 DEL M16X40 FT 4400 & 4500
10	430920	1	BOLT HEX M20x80MM
11	460143	1	LOCK NUT M8 SST A2 DIN985 5500, 6600 & 7000
12	460423	1	NUT HEX M10X1.50 LOCK DIN985A2 SS
13	460585	1	LOCKING NUT M16 DIN985 A2 SS 4400 & 4500
14	461228	1	NUT HEX M20
15	461316	1	NUT HEX LOCK M30X3.5 DIN 985
16	471131	1	WASHER, M30, Ø56/31.0X 4.0, SS
17	781136	1	HYDRAULIC SHOCK NCM4400 SUSP. 4400 & 4500
17	781137	1	HYDRAULIC SHOCK NCM6600 SUSP. 5500, 6600 & 7000
18	14022800	1	NUT M33-1.5/NV=55/L=8
19	14044000	1	PIN Ø35 L=165 DELTA 5500, 6600 & 7000
19	61030800	1	PIN Ø30/L=127 4400 & 4500
20	16155600	1	ACCUMULATOR MT. PLATE 6600 5500, 6600 & 7000
21	28023900	1	ACCUMULATOR 0.75L/70 BAR CM"05 4400 & 4500
21	28059400	1	ACCUMULATOR NCM6600 SUSPENSION 5500, 6600 & 7000
22	28045703	1	HUB ASSY 10-13.19-11.02 25000#
23	28051600	1	HYD. HOSE 3/8" L=745 OML45°/BA 4400 & 4500 BSP
23	28060300	1	HYD. HOSE 1/2" L=710 OML45°/BA 5500, 6600 & 7000 BSP
23	78561500	1	HY.HO.3/8"L= 745 45°-1/2BAN 4400 & 4500 ORFS
23	78570700	1	HY.HO.1/2"L= 795 BAN-45° 5500, 6600 & 7000 ORFS
24	28064100	1	GASKET SET FOR CYL. 781136 4400 & 4500

Pos.	parts-nº	order qty	description
24	28064200	1	GASKET SET FOR CYL. 781137 5500, 6600 & 7000
25	61011703	1	ACCUMULATOR MT. BKT. NCM 4400 4400 & 4500
26	61030600	1	PIN THREADED Ø40/L=124 M30-3.0 4400 & 4500
26	61037700	1	PIN THREADED Ø40/L=181 M30-3.5 5500, 6600 & 7000
27	61031100	1	PIN Ø30/L=81 4400 & 4500
27	61037600	1	PIN Ø34.8/L=94 5500, 6600 & 7000
28	63024203	1	AXLE W/M SUSP. ADJ. CM"05" 4400 & 4500
29	63027003	1	AXLE W/M SUSP. ADJ. NCM6600 5500, 6600 & 7000
30	63033703	1	AXLE INSERT NCM 44/66/9000
31	63033803	1	AXLE SUSPENDED NCM 44 120"
32	63033903	1	AXLE SUSPENDED NCM 66 120"

WHEELS FOR NEW COMMANDER
E1070-HIN, 01:01:16

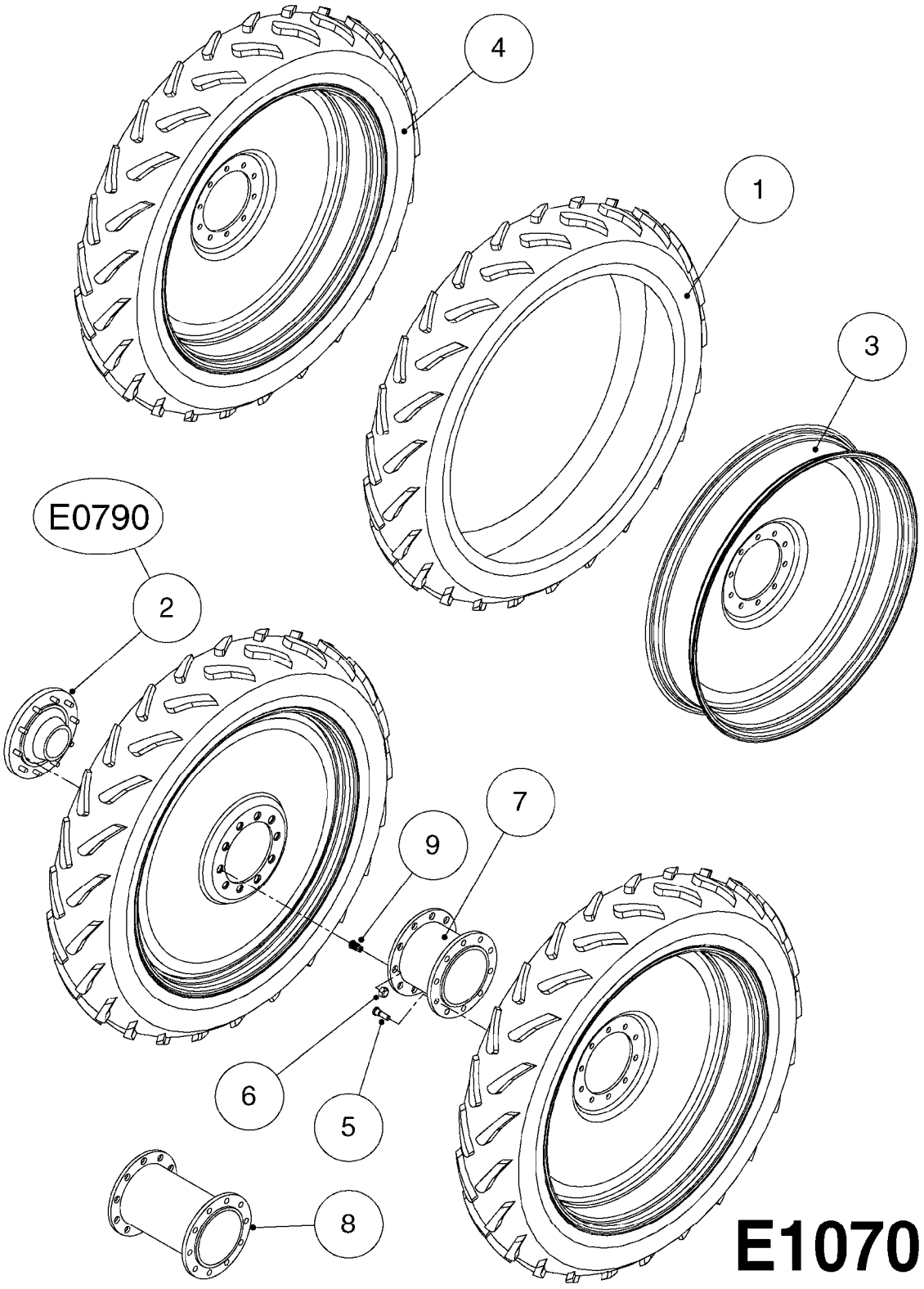

Agroparts: www.HARDI-INTERNATIONAL.com

WHEELS FOR NEW COMMANDER
E1070-HIN, 01:01:16

Date 12.08.2020 11:40

Pos.	parts-n°	order qty	description
1	10615703	1	TIRE 320 90R46' RAD.TL 357774
2	28045703	1	HUB ASSY 10-13.19-11.02 25000#
3	28007103	1	RIM,10x46,5.75NOS,13.189BC
4	28031203	1	TIRE ASSY. 320/90R50" HL R.H.
4	28031303	1	TIRE ASSY. 320/90R50" HL L.H.
4	28037603	1	TIRE ASSY.320/90R50" R.H. DUAL
4	28037703	1	TIRE ASSY.320/90R50" L.H. DUAL
4	28038603	1	TIRE 320/90R50" 161A8B HI LOAD
4	70006303	1	WHEEL ASM. 320/90R46 LH
4	70006703	1	WHEEL ASM. 320/90R46 RH
5	28034803	1	STUD 3/4"NF/5/8"KNURL L=2-5/8"
6	46000303	1	NUT, BUD WHEEL, OUTER, RH
7	61011203	1	DUAL SPACER 22" ROW 50" TIRE
8	61011303	1	DUAL SPACER 30" ROW 50" TIRE
9	46000203	1	NUT, BUD WHEEL, INNER, RH

DRAWBAR - NCM 9000
E1080-HIN, 31:03:16

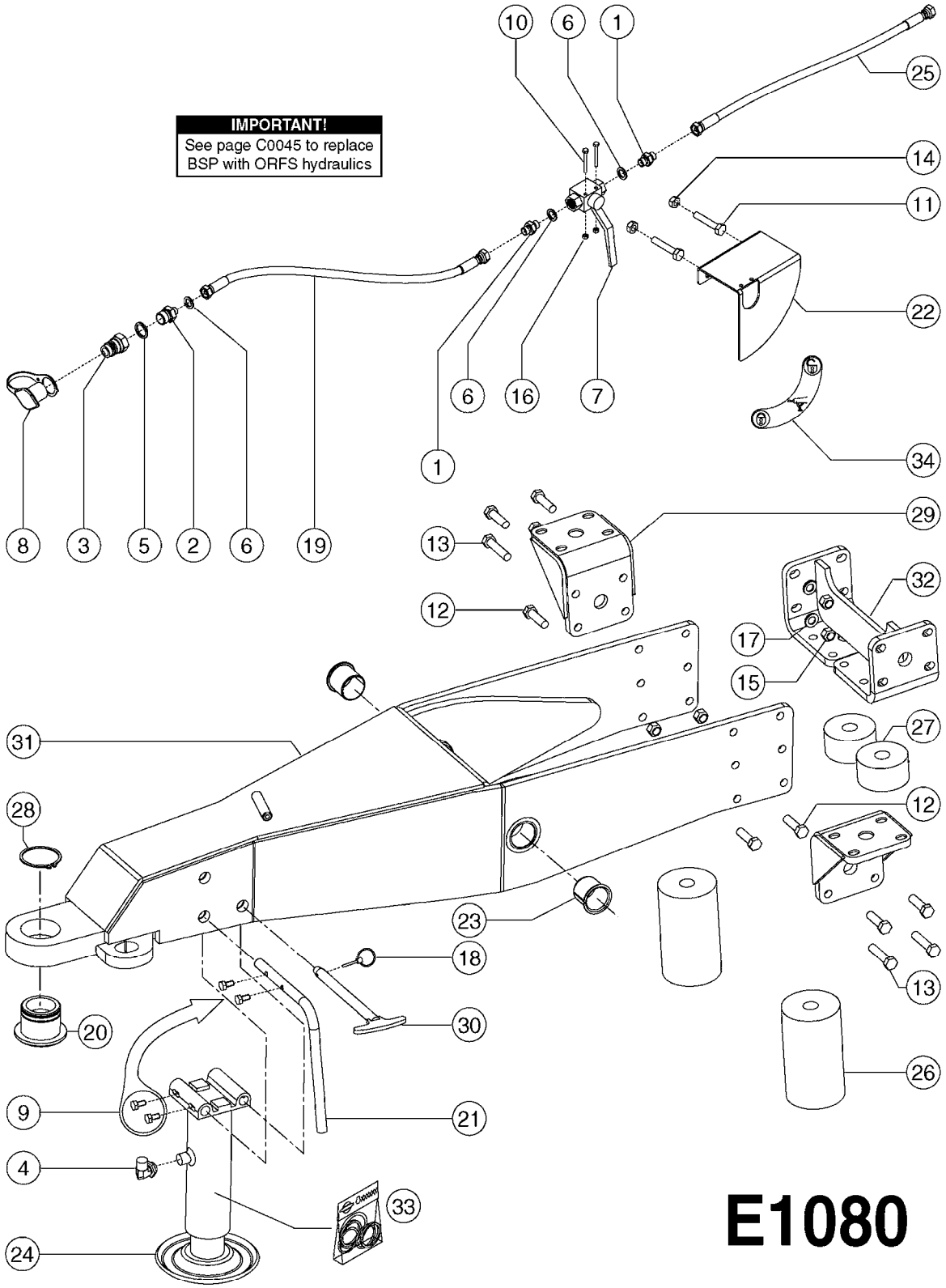

Agroparts: www.HARDI-INTERNATIONAL.com

DRAWBAR - NCM 9000
E1080-HIN, 31:03:16

Date 12.08.2020 11:40

Pos.	parts-n°	order qty	description
1	146845	1	HEX NIPPLE 1/4"X1/4"
2	146846	1	HEX NIPPLE 1/2" X 1/4"
3	230311	1	QUICK COUPLING 1/2"
4	232278	1	NIPPLE 3/8"/90° W. UNION NUT
5	241356	1	DOWTYSEAL 1/2"
6	241404	1	DOWTY SEAL 1/4"
7	284635	1	BALL VALVE HY. 1/4 X 1/4 BSP
8	334206	1	DUST HOOD FOR HY-COUPLING
9	420626	1	BOLT HEX 8.8 DEL M10X20 FT
10	421142	1	BOLT HEX 8.8 DEL M5X40
11	421224	1	BOLT HEX 8.8 DEL M10X55
12	430765	1	BOLT HEX 8.8 DEL M16X55
13	430915	1	BOLT HEX 8.8 DEL M16X70
14	460423	1	NUT HEX M10X1.50 LOCK DIN985A2 SS
15	460585	1	LOCKING NUT M16 DIN985 A2 SS
16	461217	1	NUT HEX M5 LOCK
17	471128	1	WASHER, M16, Ø30/17.0X 3.0, SS
18	480244	1	PIN SNAP D4.5
19	784114	1	HOSE HY X 1/4 X 80.7" STR+STR
20	14017204	1	BUSHING D106/D52 L=68 HITCH
21	14027204	1	HANDLE HYDRAULIC JACK NCM 9000
22	16160000	1	PLATE F. HYD. VALVE CM66/9000
23	21000904	1	BEARING TEFLON 50/52
24	27004104	1	JACK STAND HYDRAULIC NCM9000
25	78400704	1	HOSE HY 1/4" l=130" STR+3/8STR
26	39001204	1	BUFFER PU D120X210 NCM 9000
27	39001304	1	BUFFER PU D105X55 NCM 9000
28	48000904	1	SNAP RING D1400-0800 NCM 9000
29	61021504	1	SUS.MOUNT 9000 DRAWBAR
30	61023604	1	HYDRAULIC JACK PIN NCM 9000
31	63040204	1	DRAWBAR NCM 9000
32	63040304	1	DRAWBAR INSERT NCM 9000
33	75000404	1	REPAIR KIT - HYD.JACK NCM 9000
34	97814500	1	DECAL JACK STAND LOCK VALVE

FRAME - NCM 9000
E1090-HIN, 01:01:16

Date 12.08.2020 11:40

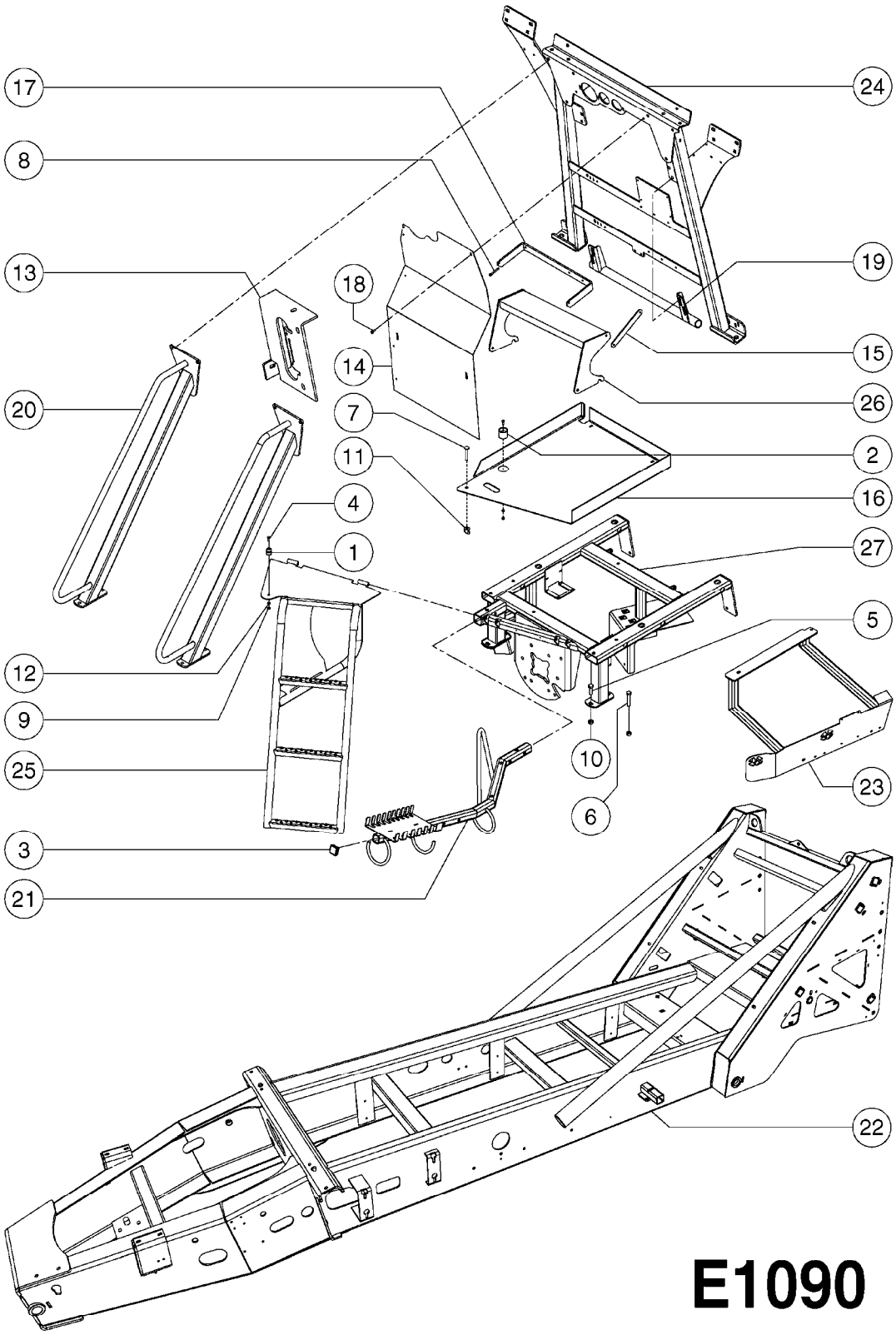

Agroparts: www.HARDI-INTERNATIONAL.com

FRAME - NCM 9000
E1090-HIN, 01:01:16

Date 12.08.2020 11:40

Pos.	parts-nº	order qty	description
1	242567	1	DOOR STOP, MALE
2	242568	1	DOOR STOP, FEMALE
3	334571	1	PLUG 40x40x2 F.SQ.TUBE
4	410185	1	BOLT HEX 8.8 DEL M6X16
5	430286	1	BOLT HEX 8.8 DEL M12X30 FT
6	430438	1	BOLT HEX 8.8 DEL M12X65
7	440718	1	BOLT CRG M10 X 65 DEL
8	450402	1	BOLT HEX M6X50
9	460261	1	NUT HEX M6X1.00 LOCK DIN985 A2 SS
10	460703	1	NUT HEX M12X1.75 LOCK DIN985A2 SS
11	461324	1	NUT WING M10 STAINLESS STEEL
12	471125	1	WASHER M6U 6.4X14X1.2,A2 SS
13	16107004	1	PLATE 8 X 425 X 355 / 3 BENDS
14	16113204	1	PLATE 2 x 1050 x 740 / 2 BENDS
15	16113804	1	PLATE 5 X 255 X 30
16	16114504	1	DECKPLATE F.PLATFORM NCM 9000
17	16128600	1	BRACKET F. COVER PLATE NCM
18	45001500	1	SCREW THUMB PLASTIC HEAD M6x20
19	61023704	1	BRACKET TANK FRONT NCM 9000
20	63033700	1	HANDRAIL FOR PLATFORM PAINTED
21	63038700	1	HOSE & CABLE SUPPORT NCM
22	63040004	1	FRAME NCM 9000
23	63040500	1	VALVE CONSOLE PAINTED
24	63040704	1	TRANSPORT FRAME NCM 9000
25	63041204	1	STEP FOR NCM 9000
26	63041304	1	STEP TOP NCM 9000
27	63043700	1	MOUNT PLATFORM NCM 6600

PARALIFT - NCM 9000
E1100-HIN, 01:01:16

Date 12.08.2020 11:40

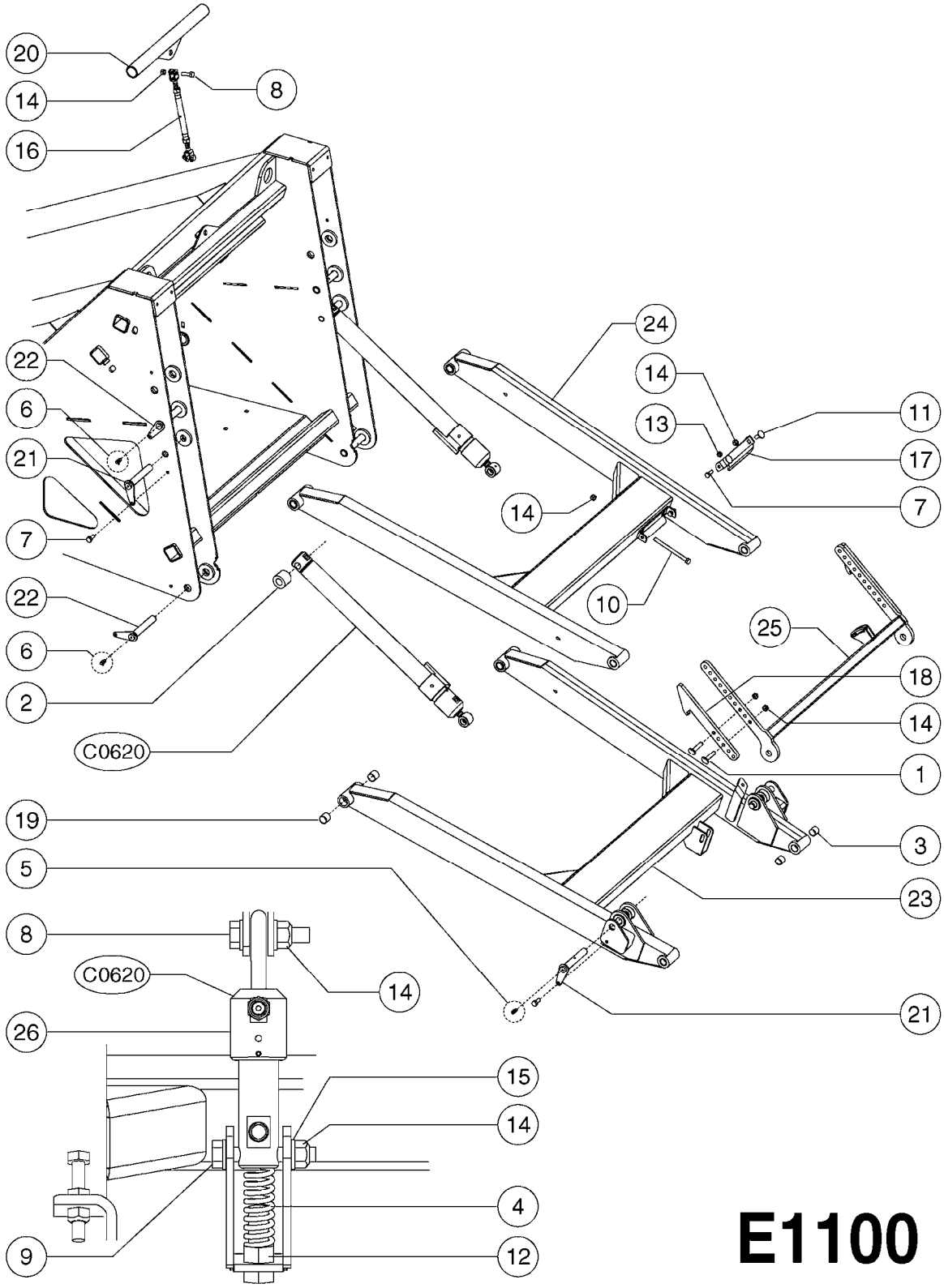

E1100

Agroparts: www.HARDI-INTERNATIONAL.com

PARALIFT - NCM 9000
E1100-HIN, 01:01:16

Date 12.08.2020 11:40

Pos.	parts-n°	order qty	description
1	140225	1	BOLT SPECIAL F.PARALIFT M12x50
2	145674	1	DISTANCE RING 0 40/25 X 42.5
3	210835	1	BUSHING D28/25 L=25
4	220706	1	SPRING SCF 12 BAR
5	283699	1	GREASE NIPPLE M6X1
6	283772	1	GREASE NIPPLE M6X1 90°
7	421002	1	BOLT HEX 8.8 DEL M10X30 FT DIN933
8	430404	1	BOLT HEX 8.8 DEL M12X50
9	430802	1	BOLT HEX 8.8 DEL M12X75
10	430908	1	BOLT HEX 8.8 DEL M12X200
11	451070	1	CARRIAGE BOLT M12X30
12	460386	1	NUT HEX M12X1.75
13	460423	1	NUT HEX M10X1.50 LOCK DIN985A2 SS
14	460703	1	NUT HEX M12X1.75 LOCK DIN985A2 SS
15	471127	1	WASHER, M12, Ø24/13X24X2.5 SS
16	729242	1	TURNBUCKLE ASSY.M16 310-435
17	16145100	1	SWIVEL FOR HOSE SUPPORT
18	16166200	1	HOOK F.TRANSP STOP W.HOLING
19	21001004	1	BEARING TEFLON D33/30 L25
20	61022004	1	TIE DOWN NCM 9000 MAIN TANK
21	61022904	1	PIN PARA LIFT 9000 25Ø L=160
22	61023004	1	PIN PARA LIFT 9000 30Ø L=160
23	63040804	1	PARALIFT BOTTOM NCM 9000
24	63040904	1	PARALIFT TOP NCM 9000
25	63041104	1	PARALIFT LOCK ARM NCM 9000
26	72531000	1	CYL. D25/12-50/78124200 W/FITT

NCM 9000 SUSPENDED AXLE
E1110-HIN, 25:02:19

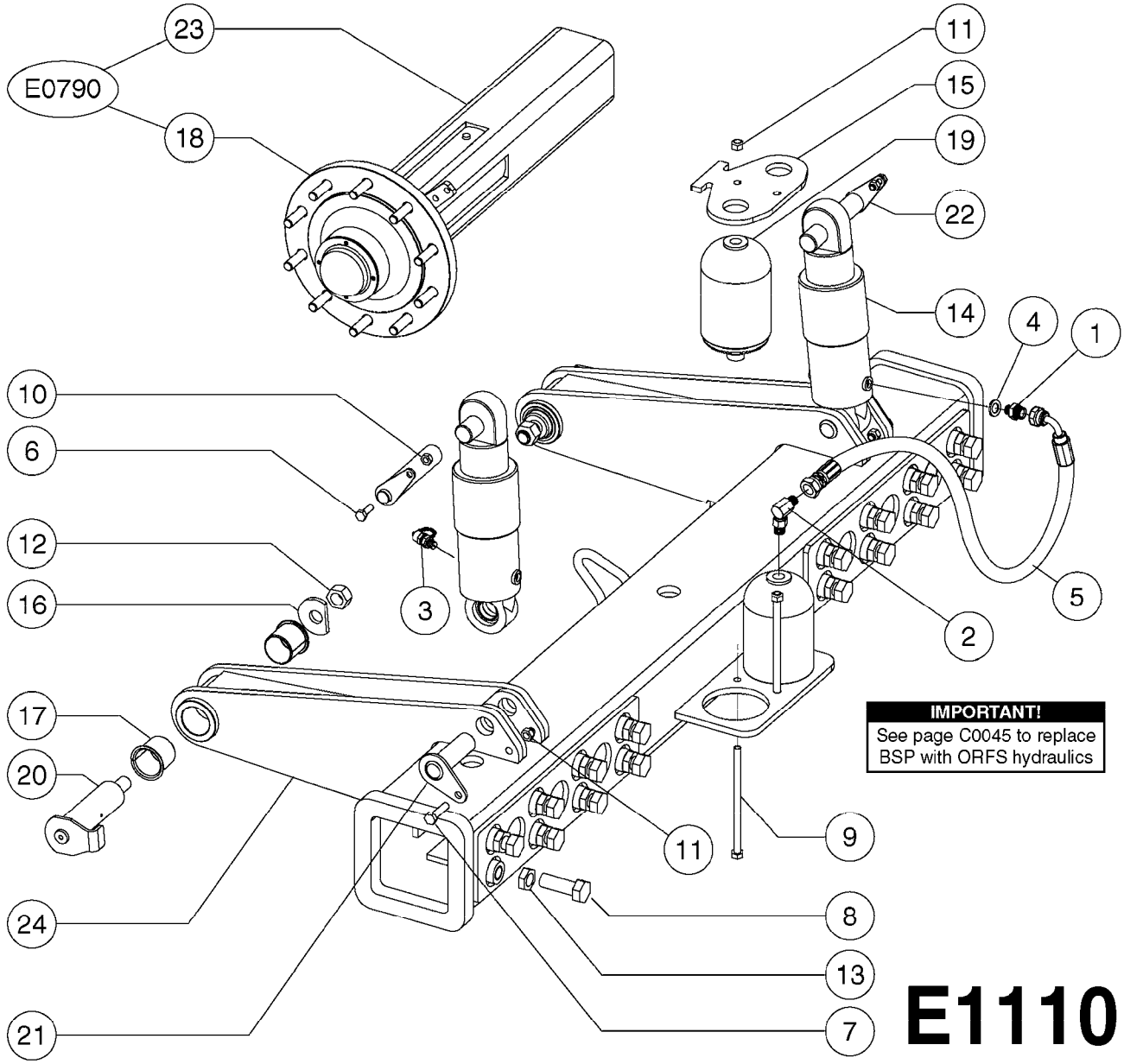

E1110

Agroparts: www.HARDI-INTERNATIONAL.com

NCM 9000 SUSPENDED AXLE
E1110-HIN, 25:02:19

Date 12.08.2020 11:40

Pos.	parts-n°	order qty	description
1	147132	1	HEX NIPPLE 1/2"X1/2" BSP DEL
2	232293	1	ELBOW 90° 1/2"x1/2"
3	232298	1	HY. TEST CONN. 1/2" OCBR-108
4	241356	1	DOWTYSEAL 1/2"
5	284791	1	HOSE HY X 1/2 X 21.5"STR+ELB
6	421002	1	BOLT HEX 8.8 DEL M10X30 FT DIN933
7	430393	1	BOLT HEX 8.8 RAW M12X50
8	430930	1	BOLT HEX 8.8 DEL M24X70
9	430947	1	BOLT HEX 8.8 DEL M12X210
10	460423	1	NUT HEX M10X1.50 LOCK DIN985A2 SS
11	460703	1	NUT HEX M12X1.75 LOCK DIN985A2 SS
12	460747	1	NUT HEX M24 LOCK
13	461244	1	NUT HEX M24X3 JAMB.
14	781137	1	HYDRAULIC SHOCK NCM6600 SUSP.
15	16110704	1	PLATE 10 X 250 X 165
16	16110804	1	PLATE 8 X 70 X 55
17	21000904	1	BEARING TEFLON 50/52
18	28045703	1	HUB ASSY 10-13.19-11.02 25000#
19	28059400	1	ACCUMULATOR NCM6600 SUSPENSION
20	61021704	1	PIN SUSP.AND DRAWBAR NCM 9000
21	61021804	1	PIN HYD.SUSP.BOTTOM NCM 9000
22	61021904	1	PIN HYD.SUSP.TOP NCM 9000
23	63033703	1	AXLE INSERT NCM 44/66/9000
24	63040404	1	AXLE SUS. 72-90 ADJ. NCM 10000
24	63043304	1	AXLE SUS. 120" FIXED NCM 10000

Agroparts: www.HARDI-INTERNATIONAL.com

TANK - SARITOR 4000/5000
E1120-HIN, 17:07:19

Page 0

Date 12.08.2020 11:40

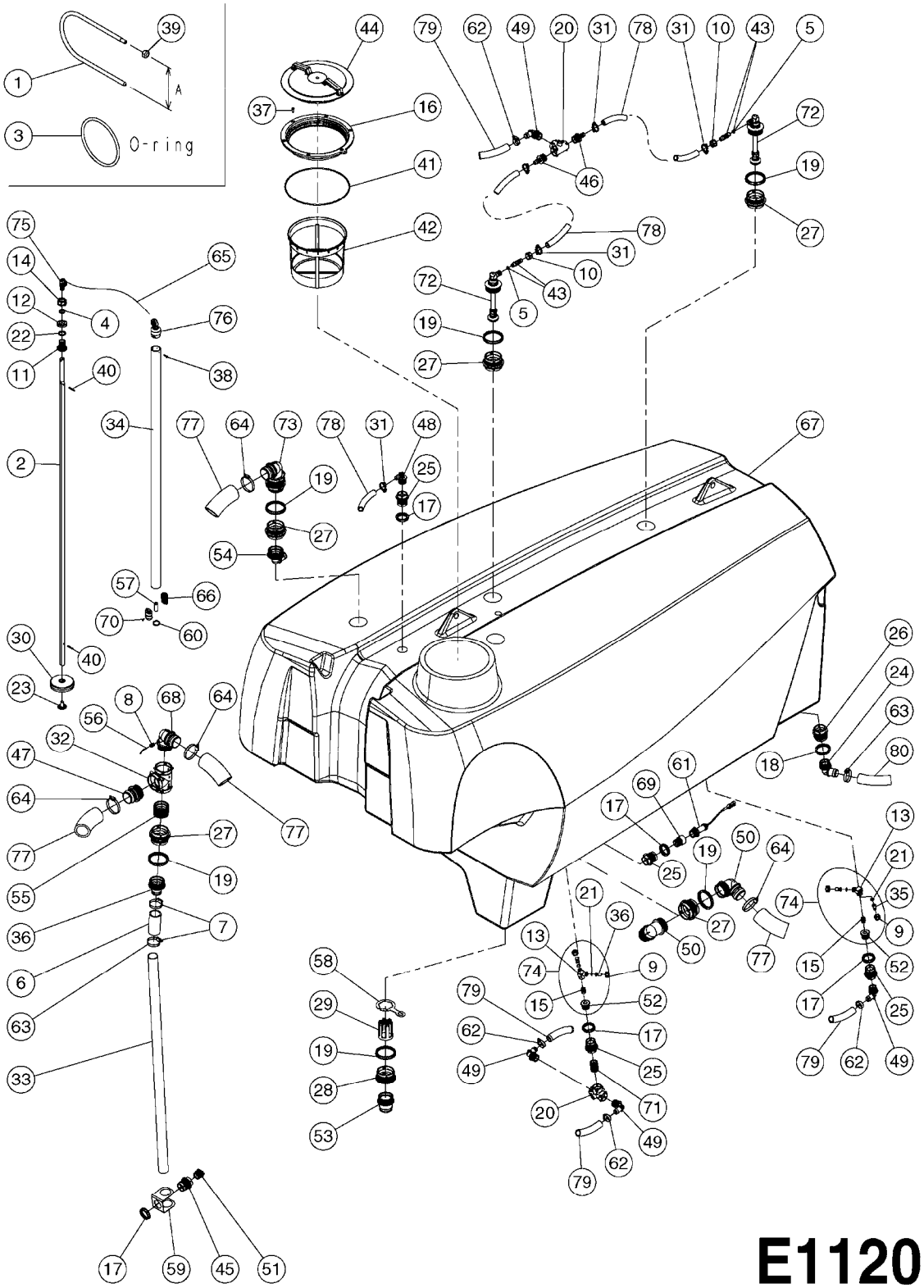

Agroparts: www.HARDI-INTERNATIONAL.com

TANK - SARITOR 4000/5000
E1120-HIN, 17:07:19

Date 12.08.2020 11:40

Pos.	parts-n°	order qty	description
1	145995	1	FITT.DK S-53 FORK
1	145996	1	FITT.DK S-67 FORK
1	145997	1	FITT.DK S-93 FORK
1	147774	1	FITT.DK S-93 FORK W. M5 THREAD
2	152547	1	ROD F.FLOAT SAR4000 1970mm
2	15028800	1	ROD F. FLOAT CM6000/7000/SAR5000
3	242053	1	O-RING 3 X 44.2 90SH NITRIL
3	242354	1	O-RING D32.2X3.0 VITON
3	24011701	1	O-RING R3.42x63.09 FKM70
4	242309	1	SEAL Ø22 ID Ø30 OD X 4 HIGH
5	242594	1	O-RING D14 X 1.78 SCH.70-EPDM
6	251884	1	HOSE 2" SUCTION L=5" (120MM)
7	284724	1	CLAMP HOSE GEAR D52-70
8	288660	1	FITTING G1/4"-Ø4 mm
9	320084	1	FITT.DK NUT 1/2" BSP
10	320283	1	FITT.DK NUT 3/4"BSP
11	320467	1	FITT.DK BULKHEAD 1"BSP SINGLE
12	320471	1	FITT.DK NUT 1" BSP JAMB
13	320563	1	FITT.DK 3 WAY 1/2" 110 DEG.
14	320574	1	FITT.DK NUT 1" BSP SPECIAL
15	320655	1	FITT.DK HN 1/2"-1/2" BSP
16	322097	1	THREADED RING F. LID
17	322107	1	FITT.DK S-53 BULKHEAD NUT
18	322108	1	FITT.DK S-67 BULKHEAD NUT
19	322109	1	FITT.DK S-93 BULKHEAD NUT
20	322352	1	FITT.DK S-53 TEE
21	330212	1	O-RING D19/D14X2.4 F.1/2"NUT
22	332577	1	O-RING D38/D30X4 F.1" PUR.
23	333864	1	GUIDE F. SAFETY VALVE SPRING
24	334245	1	FITT.DK S-67 ELB. 1-1/2"RUBBER
25	334260	1	GASKET F. S-53 BULKHEAD
26	334261	1	GASKET F. S-67 BULKHEAD
26	726464	1	FITT.DK S-67 BULKHEAD W/GASKET
27	334262	1	GASKET F.S-93 BULKHEAD
27	726465	1	FITT.DK S-93 BULKHEAD W/GASKET
28	334262	1	GASKET F.S-93 BULKHEAD
28	727339	1	FITT. S93 DRAIN BULKHEAD W/O-R
29	334434	1	CAGE F.SPRING BOTTOM DRAIN ASY
30	334515	1	FLOATER FOR LIQUID LEVEL
31	334531	1	CLAMP HOSE PLASTIC 3/4"
32	334545	1	FITT.DK S-93 TEE
33	341235	1	TUBE, SUCTION-2", L=1900MM CUT TO LENGTH
34	341273	1	TUBE F.SIGHT GAUGE L=65" CUT TO 1552MM
35	370495	1	NOZZLE INJECTOR 5066-3.0
36	390691	1	FITT.DK S-93 STR.2"PVC DRILLED
37	440392	1	SCREW 6.3 X 25.0 DIN7981C TORX
38	440677	1	SCREW F. PLASTIC 5X20 SS
39	468035	1	NUT HEX M5 A2 LOCK DIN 985
40	480717	1	PIN E 5X40 SST
41	614588	1	SEAL F. LID
42	614602	1	FILTER BASKET
43	724621	1	FITT.DK HB 3/4"ASSY F.3/4" NUT
44	726003	1	LID F. TANK
45	726463	1	FITT.DK S53 BULKHEAD W/GASKET
46	726558	1	FITT.DK S53 STR. 3/4" W.ORING
47	726564	1	HOSE TAIL 2-1/2" W.O-RING
48	726570	1	FITT.DK S-53 ELB.3/4" W.ORING
49	726571	1	FITT.DK S-53 ELB.1", W ORING
50	726576	1	FITT. DK S-93 2-1/2" 90°

Pos.	parts-n°	order qty	description
51	726578	1	FITT.DK S53 PLUG WITH O-RING
52	726694	1	PLUG,S53,1/2"FBSP THD W.ORING
53	727133	1	HOSETAIL S93 2"1/2 + O-RING
54	728395	1	FITT.DK S-93 ELB.1-1/2" 90 DEG
55	728525	1	FITT. S93 CONNECTOR W/O-RINGS
56	981722	1	AIR HOSE, BLACK, D4X2.7
57	14120300	1	WEIGHT F.SIGHT GAUGE MARKER
58	16135600	1	GUIDE FOR SIGHT GAUGE NAV/NCM
59	16379700	1	U-BRACKET F. Ø51 PIPE SS
60	24265100	1	O-RING z28x4 SH70 VITON
61	26014100	1	TANK SENSOR-ELECTRONIC
62	28030003	1	CLAMP HOSE GEAR P1" 6716
63	28030103	1	CLAMP HOSE GEAR P5/4-S1.5"6724
64	28030303	1	CLAMP HOSE T-BOLT S2.5" 235-76
65	28034100	1	CABLE F.LIQUID LEVEL IND. SS L=5M
66	33522100	1	MARKER HALF SIGHT GAUGE RED
67	35004203	1	TANK, MAIN 5000L SARITOR 09
67	35004503	1	TANK, MAIN 4000L SARITOR 11
68	39121500	1	S93 2-1/2" ELB W. 1/4" PORT
69	39123100	1	ADAPTER S53/1" RG.
70	44074500	1	PT SCREW 40X10 WN5451/TORX 20IP SS
71	72114300	1	FITT. DK S-53 MALE MALE W.ORIN
72	72358000	1	TANK RINSE LOW MOD.ASSMBLY NCM
73	72374800	1	TANK VENT S93 2-1/2" NAV/NCM
74	72462900	1	S53
			2X EJEKTORNOZZLE AGITATION
75	72776300	1	PULLEY FLOAT COMPLETE
76	72776400	1	PULLEY SIGHT GAUGE COMPLETE
77	92702803	1	HOSE PVC SUCT GRAY 2.5"
78	92703203	1	HOSE R X3/4" X300PSI WP X0012"
79	92712403	1	HOSE R X1" X300PSI WP X0012"
80	92736503	1	HOSE R X1.5" X200PSI WP X0012"

	Agroparts: www.HARDI-INTERNATIONAL.com	
HARDI	PRESIDIO MUDGUARDS E1130-HIN, 22:06:16	Page 0 Date 12.08.2020 11:40

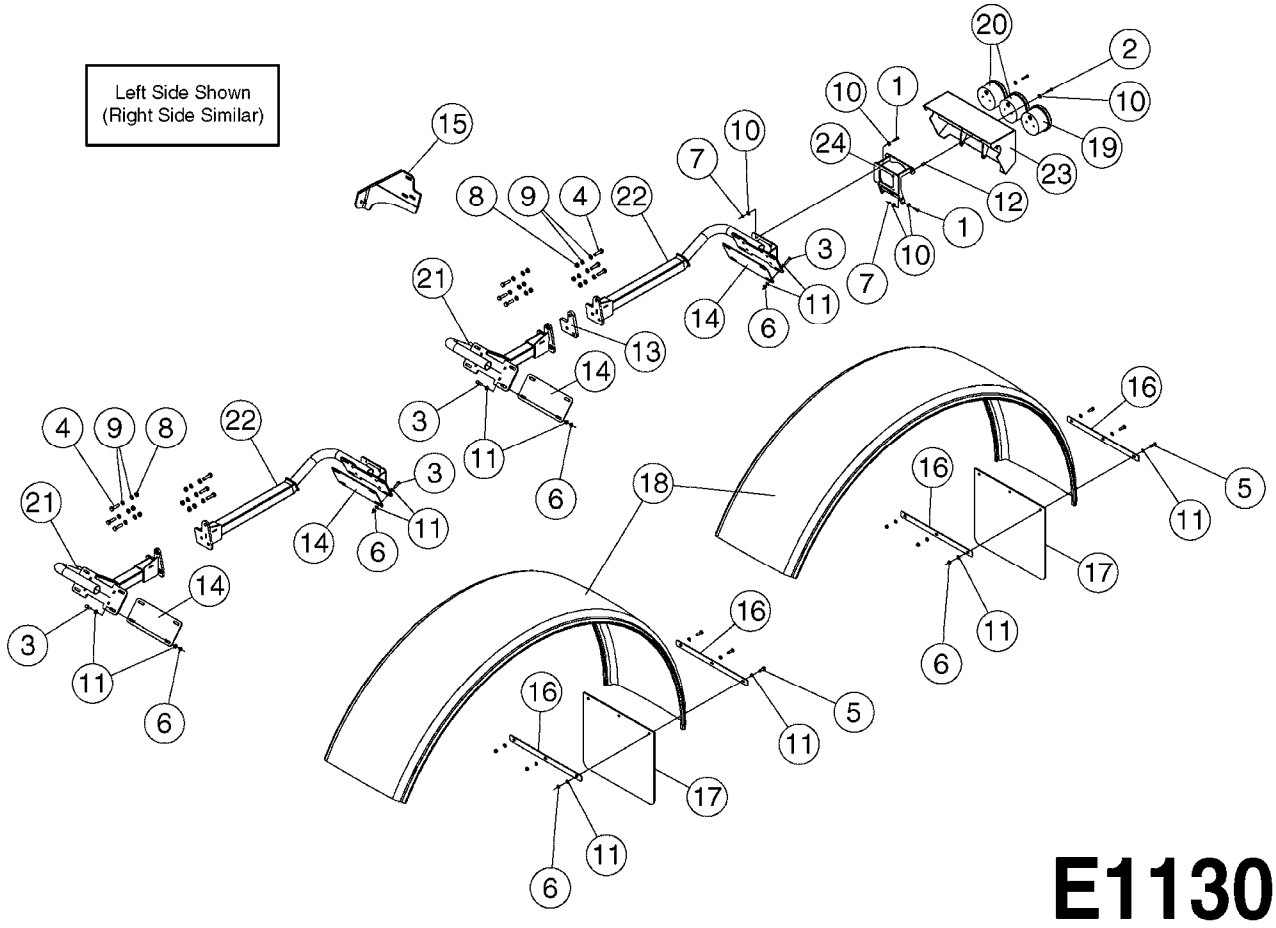

Agroparts: www.HARDI-INTERNATIONAL.com

PRESIDIO MUDGUARDS
E1130-HIN, 22:06:16

Date 12.08.2020 11:40

Pos.	parts-n°	order qty	description
1	410362	1	BOLT HEX 8.8 SS M6X20
2	410686	1	BOLT HEX 8.8 DEL M6X30
3	420567	1	BOLT HEX 8.8 DEL M8X30 FT
4	420965	1	M10X40 MACHINE SCREW STAINLESS
5	421046	1	BOLT HEX M8X25/25 A2 SS DIN933
6	460143	1	LOCK NUT M8 SST A2 DIN985
7	460261	1	NUT HEX M6X1.00 LOCK DIN985 A2 SS
8	460423	1	NUT HEX M10X1.50 LOCK DIN985A2 SS
9	471122	1	WASHER, M10, Ø20/10.5X 2.0, SS
10	471124	1	WASHER, M6, Ø18/ 6.4X 1.6, SS
11	471126	1	WASHER, M8, Ø16/ 8.4X 1.6, SS
12	480811	1	BLIND FASTENER M6 STAINLESS
13	16168803	1	PLATE, FLAT, 1/2", 128x104, PR
13	16182503	1	SPACER SPEED SENSOR BRACKET, PR
			ONLY W/SPEED SENSOR BRACKET
14	16168903	1	PLATE, FLAT, 1/8", 285x120, PR
15	16182303	1	BRACKET, SPEED SENSOR, PR
16	16183003	1	PLATE, MUD FLAP, PR
17	24003403	1	MUDFLAP, 450 WIDE, HARDI
18	24004801	1	MUDGUARD 150° L510
19	26011901	1	REAR TURN SIGNAL, ORANGE LED
20	26012001	1	REAR LIGHT STOP/POSITION RED LED
21	63041103	1	MUDGUARD BRACKET, FRONT LEFT, PR
21	63041203	1	MUDGUARD BRACKET, FRONT RIGHT, PR
22	63041303	1	MUDGUARD BRACKET, REAR LEFT, PR
22	63041403	1	MUDGUARD BRACKET, REAR RIGHT, PR
23	63042303	1	TAIL LIGHT BRACKET, REAR, PR
24	63042403	1	TAIL LIGHT SUPPORT, REAR, PR

PRESIDIO PARALIFT
E1140-HIN, 23:06:16

Date 12.08.2020 11:40

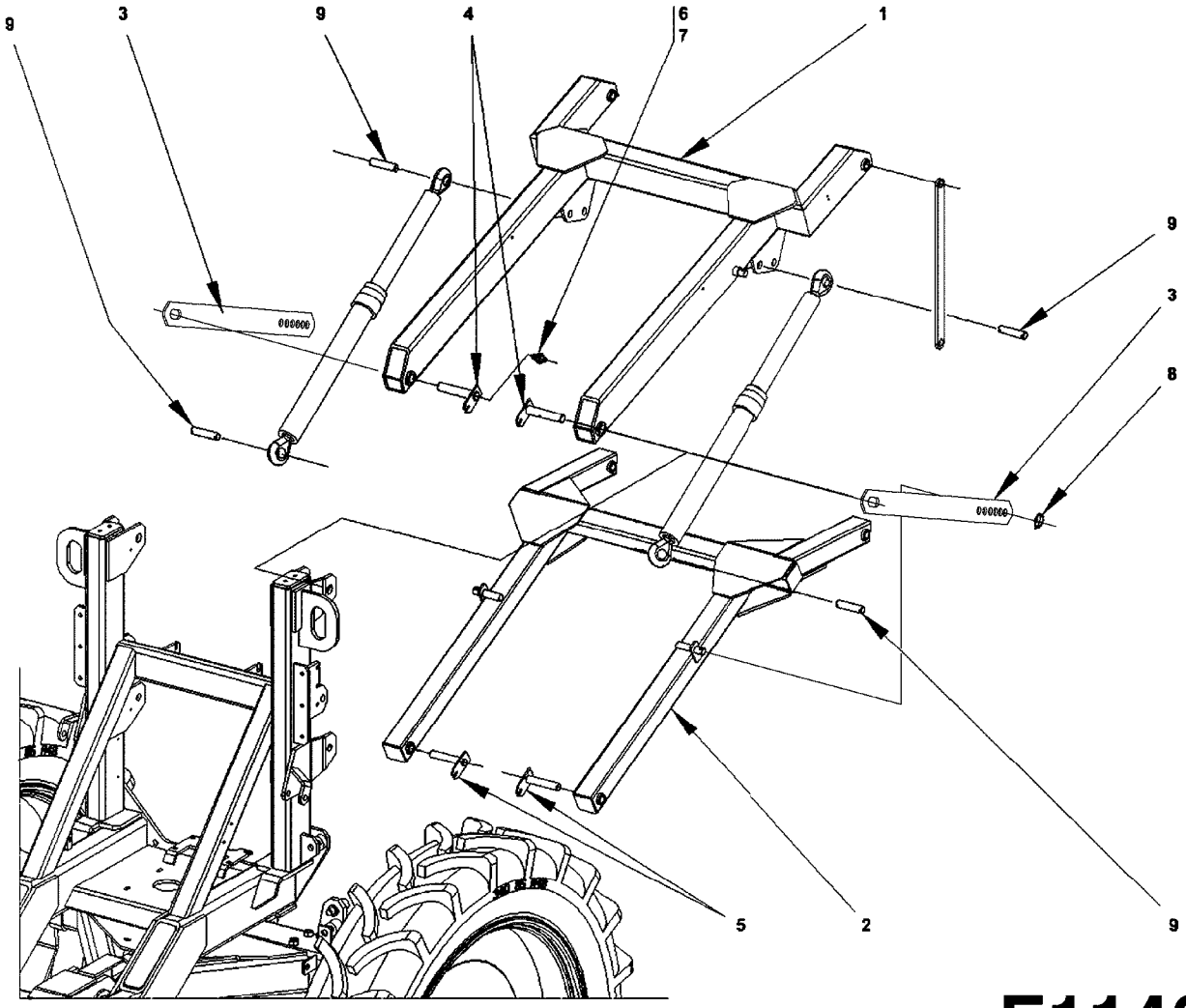

E1140

Agroparts: www.HARDI-INTERNATIONAL.com

PRESIDIO PARALIFT
E1140-HIN, 23:06:16

Date 12.08.2020 11:40

Pos.	parts-n°	order qty	description
1	PR-FEPR25501	1	UPPER PARALIFT ARM PRESIDIO
2	PR-FEPR25511	1	LOWER PARALIFT ARM PRESIDIO
3	16179203	1	TRANSPORT LOCK, PRESIDIO
4	PR-FEPR32002	1	PIN PARALIFT Ø30 PRESIDIO
5	PR-FEPR32003	1	PIN PARALIFT Ø25 PRESIDIO
6	PR-DG0016	1	GREASE ELBOW 90 °
7	PR-DD0122	1	GREASE PLUG BLACK
8	PR-DL1702080040	1	CLIP PIN D8
9	PR-FTPR32042	1	PIN GG Ø25 L=106

	Agroparts: www.HARDI-INTERNATIONAL.com	
HARDI	PRESIDIO RINSE TANK FRAME E1150-HIN, 30:06:20	Page 0 Date 12.08.2020 11:40

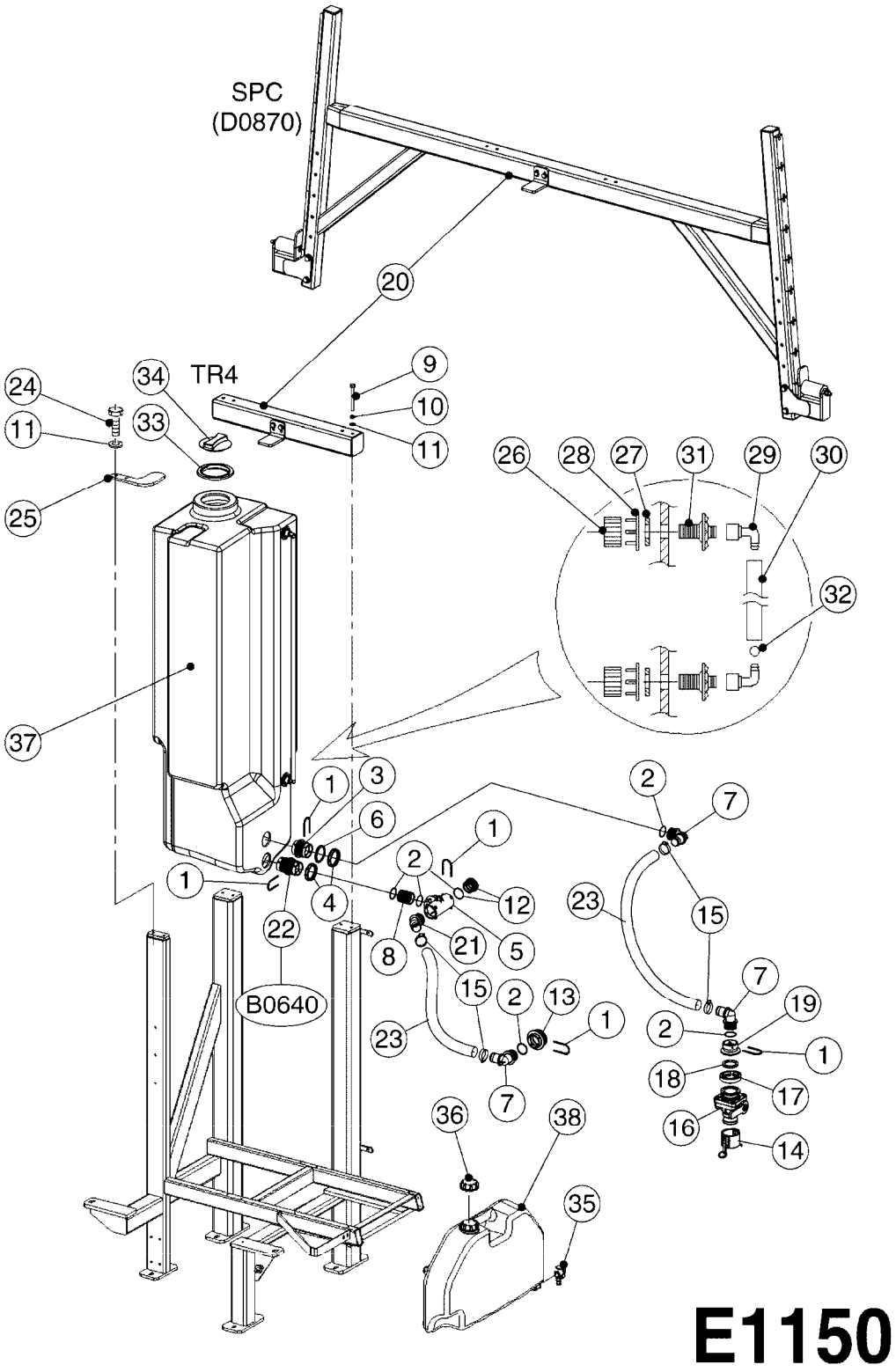

Agroparts: www.HARDI-INTERNATIONAL.com

PRESIDIO RINSE TANK FRAME
E1150-HIN, 30:06:20

Date 12.08.2020 11:40

Pos.	parts-n°	order qty	description
1	145996	1	FITT.DK S-67 FORK
2	242353	1	O-RING 3 X 44.2 VITON
3	322104	1	FITT.DK S-67 BULKHEAD
4	322108	1	FITT.DK S-67 BULKHEAD NUT
5	322224	1	FITT.DK S-67 TEE
6	334261	1	GASKET F. S-67 BULKHEAD
7	334445	1	FITT.DK S-67 ELB.1-1/2"
8	334573	1	FITT.DK S-67 CONNECTOR
9	430892	1	BOLT HEX 8.8 DEL M12X110
10	470466	1	WASHER D21.1/D12.2X2.5 LOCK
11	471127	1	WASHER, M12, Ø24/13X24X2.5 SS
12	726579	1	FITT. S67 PLUG W/O-RING
13	728562	1	FITT.DK S-93 TO S67 ADAPTOR
14	10531003	1	CAP F.MALE QUICK COUPLER 2"
15	28030103	1	CLAMP HOSE GEAR P5/4-S1.5"6724
16	28034403	1	BALL VALVE BANJO 2" FLANGE
17	28034503	1	CLAMP F. 2" STD BANJO FLANGE
18	28034603	1	GASKET F. 2" FP BANJO FLANGE
19	39002003	1	FITT S67/2" FP BANJO FLANGE
20	70118103	1	TRANSPORT KIT, PRESIDIO 2700 USED WITH SPC BOOMS
20	70130903	1	TANK LOCK DOWN KIT, PRESIDIO 2700 USED WITH TR4 BOOMS
21	72433200	1	FITT.S67 1-1/2" 45°PVC W/O-RING USED WITH TR4 BOOMS
22	72819200	1	CHECK VALVE S67 2012 THREADED
23	92702603	1	HOSE PVC SUCT GRAY 1-1/2"
24	PR-DB1044012030	1	SCREW M12x30 SS
25	PR-FEPR25032	1	PLATE, LOCK, FRONT FLUSH TANK PR2540
26	PR-SX9001	1	TANK FITTING
27	PR-SX9002	1	LOCK
28	PR-SX9004	1	SEAL
29	PR-SX9009	1	ELBOW
30	PR-SX9010	1	HOSE CLEAR
31	PR-SX9011	1	TANK FITTING
32	PR-SX9012	1	INDICATOR BALL
33	PR-SX9205	1	LID HOUSING F.RINSE TANK PRESIDIO
34	PR-SX9206	1	LID F.RINSE TANK PRESIDIO
35	PR-SX9207	1	VALVE F.HAND WASH TANK PRESIDIO
36	PR-SX9209	1	LID F.HAND WASH TANK PRESIDIO
37	PR-TC0191H	1	RINSE TANK, 70 GAL, PRESIDIO
38	PR-TC0193C	1	HAND WASH TANK YELLOW

	Agroparts: www.HARDI-INTERNATIONAL.com	
HARDI	PRESIDIO PLATFORM E1160-HIN, 10:01:18	Page 0 Date 12.08.2020 11:40

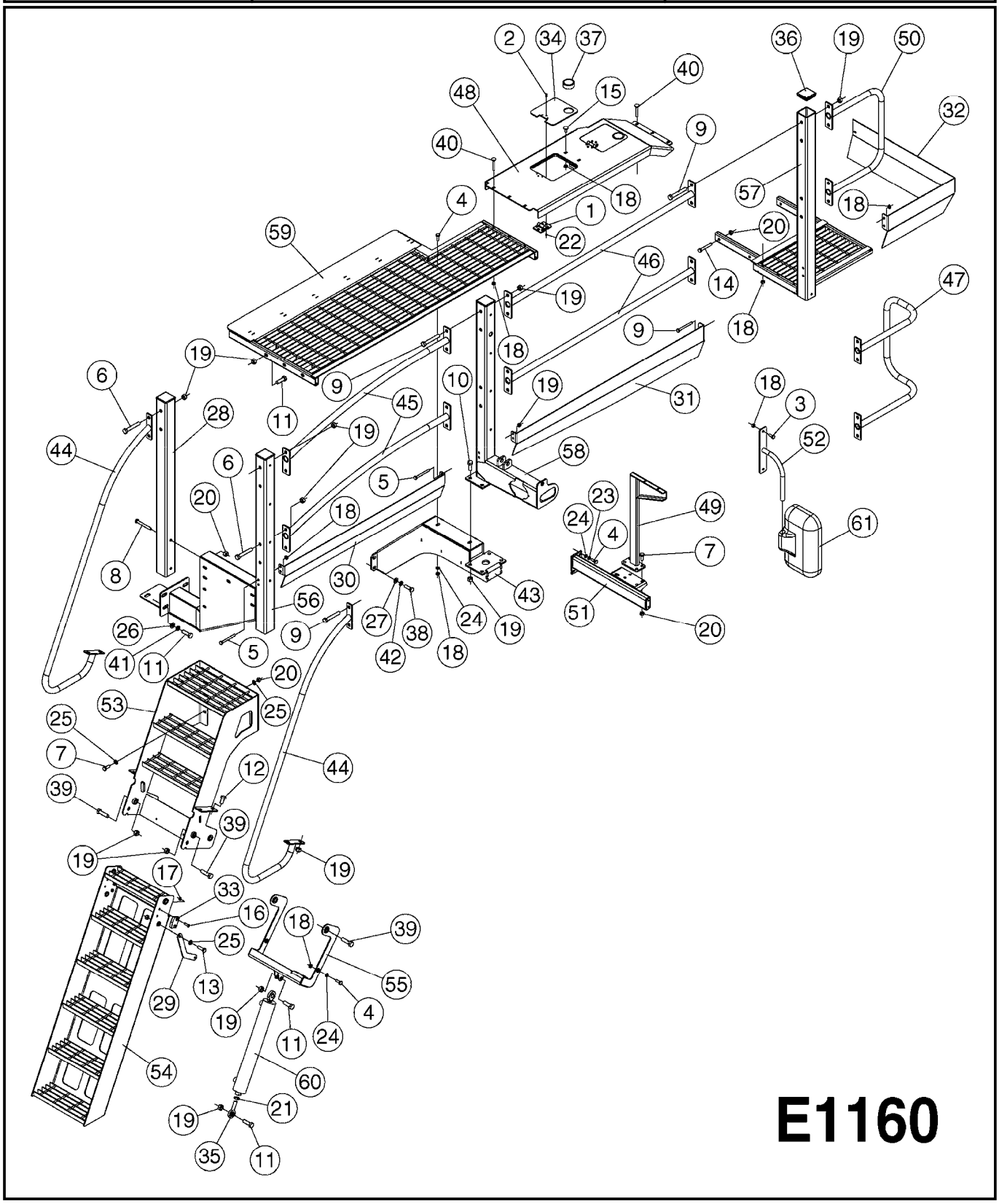

Pos.	parts-nº	order qty	description
3	420604	1	BOLT HEX 8.8 DEL M10X25 FT DIN933
4	421002	1	BOLT HEX 8.8 DEL M10X30 FT DIN933
5	421061	1	BOLT HEX 8.8 DEL M10X100 DIN931
6	430264	1	BOLT HEX 8.8 DEL M16X100
1	288590	1	HINGE, SET OF 2, PLATFORM (55021.10)
2	410406	1	BOLT HEX 8.8 DEL M5X16 FT
7	430286	1	BOLT HEX 8.8 DEL M12X30 FT
8	430367	1	BOLT HEX 8.8 DEL M12X100 DIN931
9	430463	1	BOLT HEX 8.8 DEL M16X110
10	430581	1	BOLT HEX 8.8 DEL M16X40 FT
11	430637	1	BOLT HEX 8.8 DEL M16X50 FT
12	430684	1	BOLT HEX 8.8 DEL M16X30 FT
13	430721	1	BOLT HEX 8.8 DEL M12X40 FT
14	430846	1	BOLT HEX 8.8 DEL M12X80
15	440737	1	BOLT CARRIAGE M10x25 SS
16	458032	1	BOLT M8X30 8.8 DIN7991D SS
17	460143	1	LOCK NUT M8 SST A2 DIN985
18	460423	1	NUT HEX M10X1.50 LOCK DIN985A2 SS
19	460585	1	LOCKING NUT M16 DIN985 A2 SS
20	460703	1	NUT HEX M12X1.75 LOCK DIN985A2 SS
21	461198	1	NUT HEX M16X2 JAMB
22	461217	1	NUT HEX M5 LOCK
23	470127	1	WASHER D15D10X2 M10 LOCK
24	471122	1	WASHER, M10, Ø20/10.5X 2.0, SS
25	471127	1	WASHER, M12, Ø24/13X24X2.5 SS
26	471128	1	WASHER, M16, Ø30/17.0X 3.0, SS
27	471173	1	WASHER D28.0/15.0 X 2.5
28	15052903	1	HANDRAIL POST, FRNT MNT PLATFORM, PRESIDIO
29	16192703	1	LADDER FOLD ARM, FRNT MNT PLATFORM, PRESIDIO
30	16195403	1	KICK PLATE, FRONT, PRESIDIO
31	16195603	1	KICK PLATE, MID, PRESIDIO
32	16195803	1	KICK PLATE, BACK, PRESIDIO
33	16196603	1	LADDER STOP, FRNT MNT PLATFROM, PRESIDIO
34	16197203	1	HOLE COVER, FRNT MNT PLATFORM, PRESIDIO
35	21091900	1	LINK HEAD M16 x D17 DELTA
36	28064503	1	PLUG 3"X3" F. 3/16" WALL TUBE
37	28093303	1	FLUSH-PULL LATCH, BLACK POLYCARBONATE
38	43001403	1	BOLT HEX 8.8 DEL M14X45 FT
39	43001703	1	BOLT HEX 8.8 DEL M16X60
40	45000903	1	BOLT CARRIAGE M10X70 SS
41	47001003	1	WASHER D16.5/D26X3.5 LOCK
42	47001203	1	WASHER D14.7/24.1X2.8 LOCK
43	61021703	1	PLATFORM MID SUPPORT, FRNT MNT PLATFORM, PRESIDIO
44	61022103	1	HANDRAIL, LADDER, PRESIDIO
45	61022303	1	HANDRAIL, PLATFORM FRONT, PRESIDIO
46	61022503	1	HANDRAIL, PLATFORM MIDDLE, PRESIDIO
47	61022703	1	HANDRAIL, PLATFORM BACK, PRESIDIO USED WITH TR4 BOOMS
48	61022903	1	SECONDARY PLATFORM, FRNT MNT PLATFORM, PRESIDIO
49	61023103	1	SUPPORT, SECONDARY PLATFORM, PRESIDIO
50	61023503	1	HANDRAIL, STEEL BOOM, PRESIDIO USED WITH SPC BOOMS
51	61023703	1	SECONDARY SUPPORT MNT, PRESIDIO
52	61023903	1	MIRROR BRKT, SPC BOOM, PRESIDIO
53	63043703	1	LADDER MNT, FRNT MNT PLATFORM, PRESIDIO
54	63044103	1	LADDER, FRNT MNT PLATFORM, PRESIDIO
55	63044503	1	LADDER FOLD BRKT, FRNT MNT PLATFORM, PRESIDIO
56	63044703	1	FRNT PLATFORM BRKT, FRNT MNT PLATFORM, PRESIDIO
57	63044903	1	PLATFORM CORNER, FRNT MNT PLATFORM, PRESIDIO
58	63045203	1	L. TRANSPORT, FRNT MNT PLATFORM, PRESIDIO
59	63046103	1	MAIN PLATFORM, FRNT MNT PLATFORM, PRESIDIO

Pos.	parts-nº	order qty	description
60	78103101	1	CYLINDER, 60/30, C410, LADDER, SARITOR
61	PR-CA0225	1	MIRROR ELECTRIC

	Agroparts: www.HARDI-INTERNATIONAL.com	
HARDI	PRESIDIO FUEL TANK ASSEMBLY E1170-HIN, 03:08:16	Page 0 Date 12.08.2020 11:40

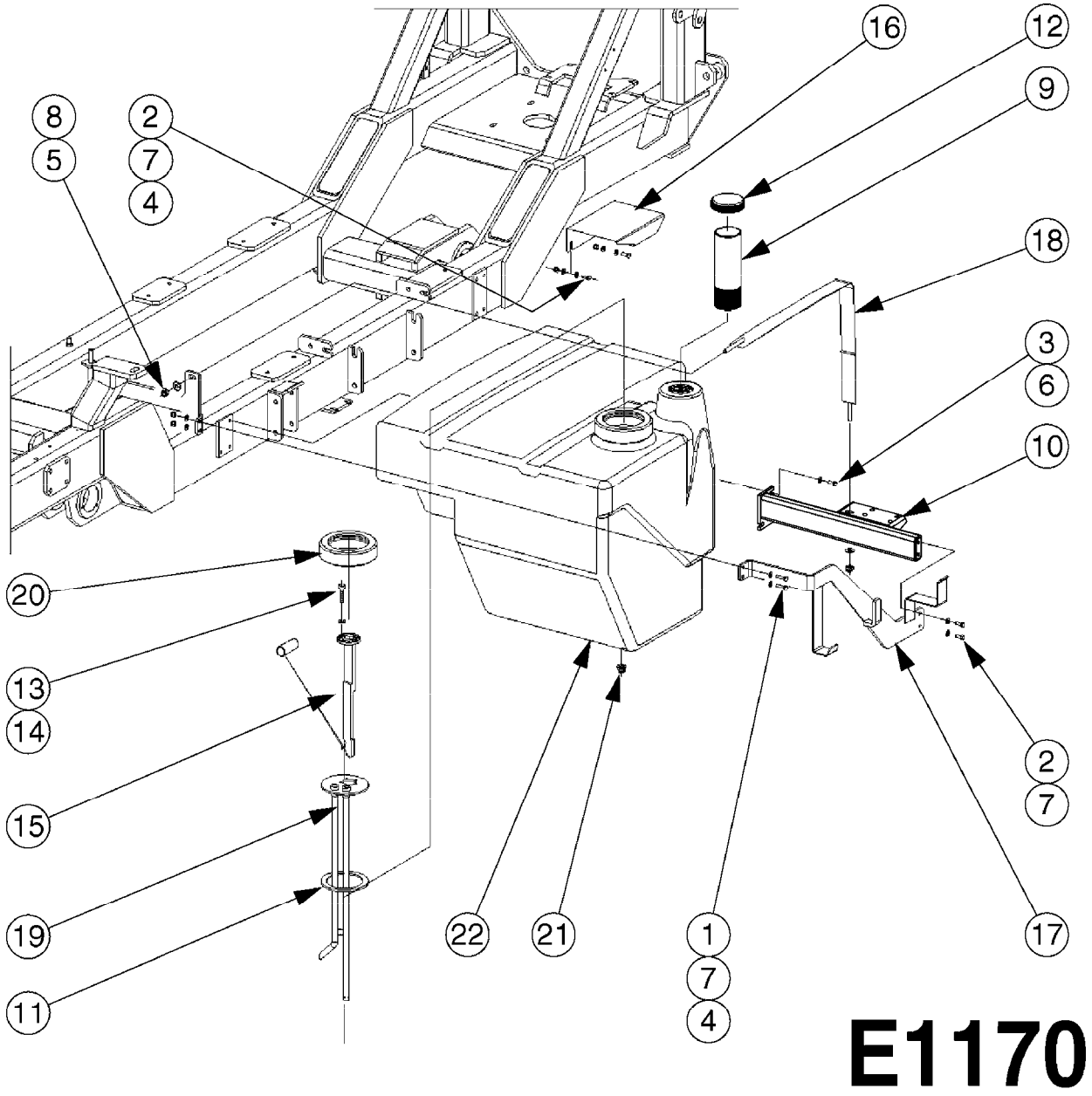

Agroparts: www.HARDI-INTERNATIONAL.com

PRESIDIO FUEL TANK ASSEMBLY
E1170-HIN, 03:08:16

Date 12.08.2020 11:40

Pos.	parts-n°	order qty	description
1	420567	1	BOLT HEX 8.8 DEL M8X30 FT
2	420582	1	BOLT HEX 8.8 DEL M8X20 FT A2
3	420604	1	BOLT HEX 8.8 DEL M10X25 FT DIN933
4	460143	1	LOCK NUT M8 SST A2 DIN985
5	460703	1	NUT HEX M12X1.75 LOCK DIN985A2 SS
6	471122	1	WASHER, M10, Ø20/10.5X 2.0, SS
7	471126	1	WASHER, M8, Ø16/ 8.4X 1.6, SS
8	471127	1	WASHER, M12, Ø24/13X24X2.5 SS
9	14022203	1	FUEL TANK NECK, PRESIDIO
			USED WITH FRONT LADDER PLATFORM
9	PR-FTPR32016	1	FUEL TANK NECK/RISER L=240MM
			USED WITH SIDE LADDER PLATFORM
10	61023703	1	SECONDARY SUPPORT MNT, PRESIDIO
11	PR-BF0030	1	GASKET, FUEL TANK, PRESIDIO
12	PR-BF0035	1	FUEL TANK PLUG Ø88 M80x2
13	PR-DB2044005012	1	SCREW CHC Stainless M 5X 12
14	PR-DS1104005	1	WASHER M 5125-INOX A2
15	PR-EA0164	1	GAUGE LEVER ADJUSTABLE 150x600 MM
16	PR-FEPR25033	1	TANK COVER ON GO PR3240
17	PR-FEPR25046	1	LOCKING FUEL TANK
18	PR-FEPR25068	1	STRAP STEEL FUEL TANK PR2540
19	PR-FEPR32006	1	PLATE GAUGE DIESEL PR3240
20	PR-FTPR32014	1	PLUG GAUGE PR3240
21	PR-HR9992	1	BM CYL CAP 1/2 "
22	PR-TC0192	1	FUEL TANK 320L PR2540

	Agroparts: www.HARDI-INTERNATIONAL.com	
HARDI	PRESIDIO SIDE LADDER E1180-HIN, 22:08:17	Page 0 Date 12.08.2020 11:40

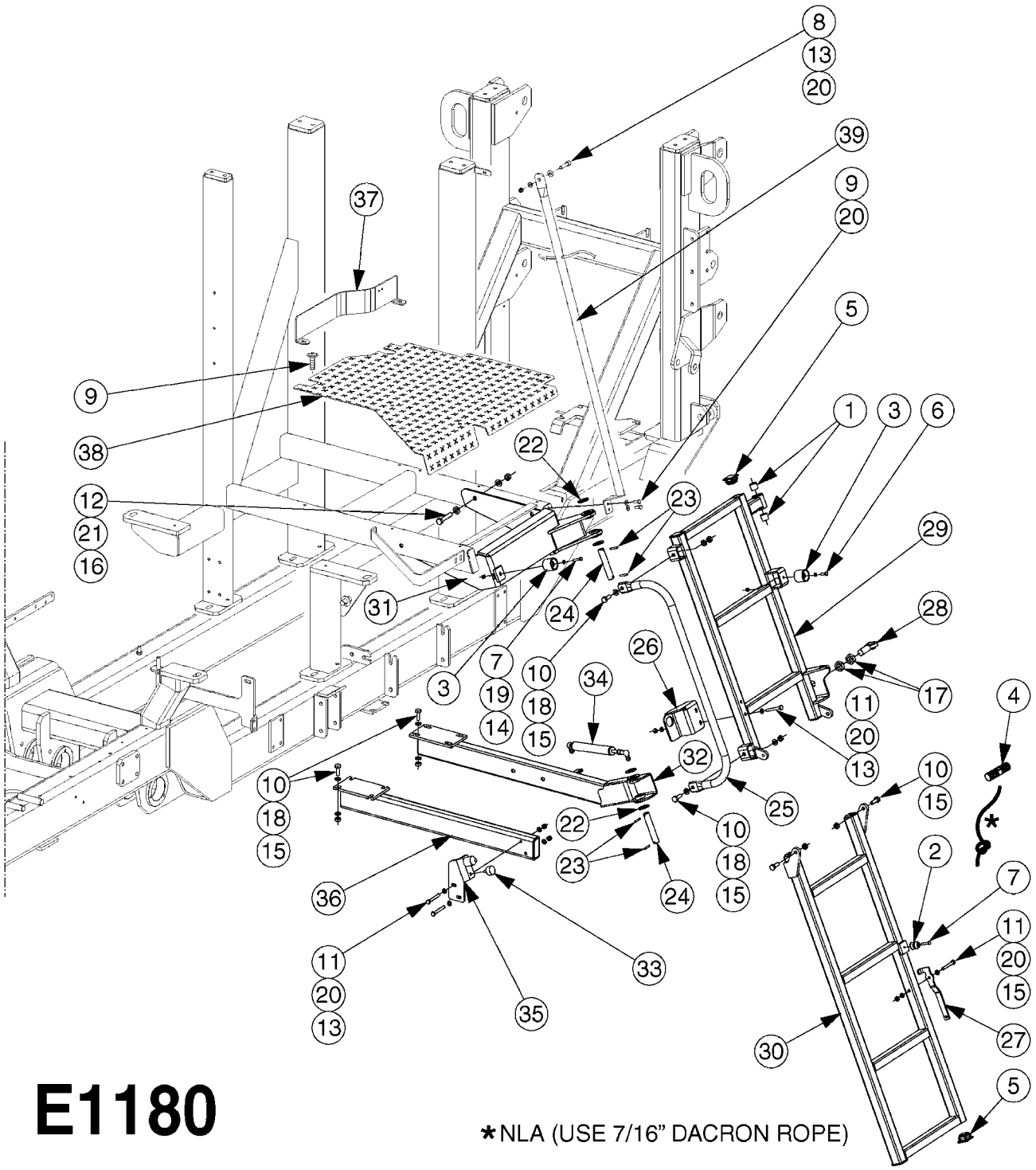

E1180

*NLA (USE 7/16" DACRON ROPE)

Agroparts: www.HARDI-INTERNATIONAL.com

PRESIDIO SIDE LADDER
E1180-HIN, 22:08:17

Date 12.08.2020 11:40

Pos.	parts-nº	order qty	description
1	210859	1	BUSH Ø23X20 L20
2	242567	1	DOOR STOP, MALE
3	242568	1	DOOR STOP, FEMALE
4	334472	1	HANDLE FOR TOP DRAIN
5	334571	1	PLUG 40x40x2 F.SQ.TUBE
6	410362	1	BOLT HEX 8.8 SS M6X20
7	410686	1	BOLT HEX 8.8 DEL M6X30
8	420567	1	BOLT HEX 8.8 DEL M8X30 FT
9	420641	1	BOLT HM 8X35/22 A2 SS DIN931
10	421002	1	BOLT HEX 8.8 DEL M10X30 FT DIN933
11	421024	1	BOLT HEX 8.8 DEL M8X60
12	430438	1	BOLT HEX 8.8 DEL M12X65
13	460143	1	LOCK NUT M8 SST A2 DIN985
14	460261	1	NUT HEX M6X1.00 LOCK DIN985 A2 SS
15	460423	1	NUT HEX M10X1.50 LOCK DIN985A2 SS
16	460703	1	NUT HEX M12X1.75 LOCK DIN985A2 SS
17	461200	1	NUT HEX M20X1.5 JAMB.
18	471122	1	WASHER, M10, Ø20/10.5X 2.0, SS
19	471125	1	WASHER M6U 6.4X14X1.2,A2 SS
20	471126	1	WASHER, M8, Ø16/ 8.4X 1.6, SS
21	471127	1	WASHER, M12, Ø24/13X24X2.5 SS
22	471129	1	WASHER, M20, Ø37/21.0X 3.0, SS
23	480730	1	SPRING DOWEL PIN 5X30 SST
24	14020803	1	PIN D19.8X109 W/2XD5, LADDER, PRESIDIO
25	15049303	1	LADDER, HANDLE, PRESIDIO
26	16179603	1	LADDER, LEFT BRACKET, PRESIDIO
27	16179703	1	LEVER, FOR CORD LADDER, PR
28	21092000	1	LINK HEAD M20 x D20 L=78 DELTA
29	63042503	1	LADDER, UPPER PART, PRESIDIO
30	63042603	1	LADDER, LOWER PART, PRESIDIO
31	63042703	1	LADDER, UPPER SUPPORT, PRESIDIO
32	63042803	1	LADDER, LOWER RIGHT SUPPORT, PRESIDIO
33	PR-DD0344	1	STOP RUBBER M8x27 Ø30 H15
34	PR-DD0432	1	GAS SPRING D10 C: 150 F: 400N
35	PR-FEPR25049	1	LADDER STOP BRACKET PRESIDIO
36	PR-FEPR25050	1	LADDER, LOWER LEFT SUPPORT, PRESIDIO
37	PR-FEPR25065	1	PLATFORM BACKSTOP PRESIDIO
38	PR-FEPR25067	1	SIDE PLATFORM PRESIDIO
39	PR-FEPR25079	1	HANDRAIL PRESIDIO

	Agroparts: www.HARDI-INTERNATIONAL.com	
HARDI	PRESIDIO MAIN TANK E1190-HIN, 23:08:18	Page 0 Date 12.08.2020 11:40

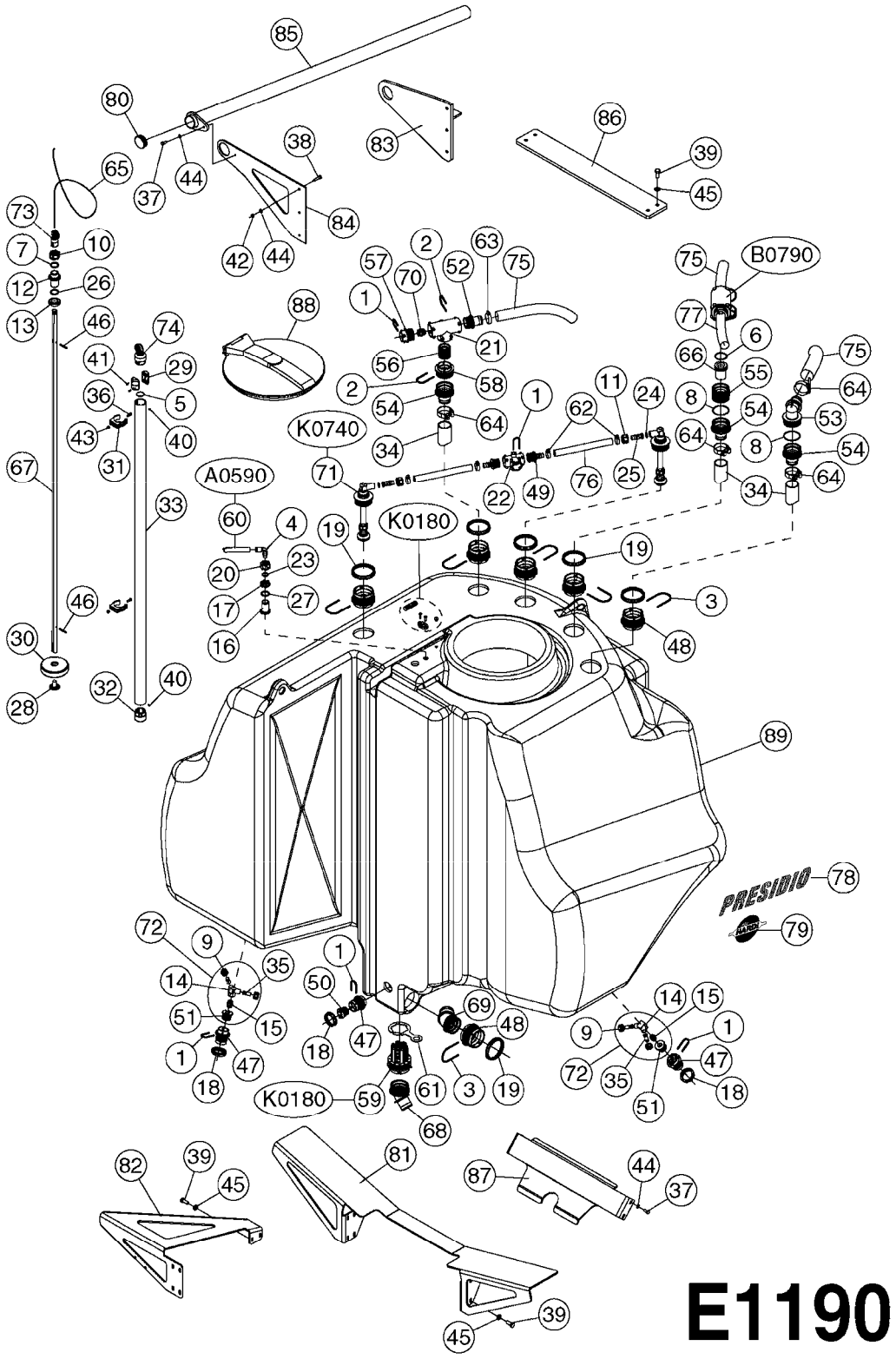

Agroparts: www.HARDI-INTERNATIONAL.com

PRESIDIO MAIN TANK
E1190-HIN, 23:08:18

Date 12.08.2020 11:40

Pos.	parts-nº	order qty	description
1	145995	1	FITT.DK S-53 FORK
2	145996	1	FITT.DK S-67 FORK
3	145997	1	FITT.DK S-93 FORK
4	232150	1	HOSE CONN. 90DEG. 1/8'X8MM PE
5	242262	1	O-RING D31X3 VITON
6	242296	1	O-RING D51X3.5
7	242309	1	SEAL Ø22 ID Ø30 OD X 4 HIGH
8	242351	1	O-RING D69.5X3.0 VITON F.S-93
9	320084	1	FITT.DK NUT 1/2" BSP
10	320095	1	FITT.DK NUT 1" BSP
11	320283	1	FITT.DK NUT 3/4"BSP
12	320456	1	FITT.DK BULKHEAD 1"BSP DOUBLE
13	320471	1	FITT.DK NUT 1" BSP JAMB
14	320563	1	FITT.DK 3 WAY 1/2" 110 DEG.
15	320655	1	FITT.DK HN 1/2"-1/2" BSP
16	321296	1	FITT.DK BULKHEAD 1/2" BSP SING
17	321307	1	FITT.DK NUT 1/2" BSP JAMB
18	322107	1	FITT.DK S-53 BULKHEAD NUT
19	322109	1	FITT.DK S-93 BULKHEAD NUT
20	322170	1	FITT.DK NUT 1/2"x 1/8"F BSP
21	322224	1	FITT.DK S-67 TEE
22	322352	1	FITT.DK S-53 TEE
23	330212	1	O-RING D19/D14X2.4 F.1/2"NUT
24	330595	1	O-RING D24.6/D20X2.1 -3/4"
25	330691	1	FITT.DK HB 3/4'F.3/4' NUT
26	332577	1	O-RING D38/D30X4 F.1" PUR.
27	332592	1	O-RING D26/D20X3
28	333864	1	GUIDE F. SAFETY VALVE SPRING
29	334513	1	MARKER HALF SIGHT GAUGE
30	334515	1	FLOATER FOR LIQUID LEVEL
31	334523	1	PIPE HOLDER Ø51.5
32	334850	1	GUIDE F. SIGHT GAUGE TUBE TOP
33	341283	1	TUBE F.SIGHT GAUGE L=72"
33	97616203	1	DECAL S/G PRESIDIO 2700 (GAL)
33	97616303	1	DECAL S/G PRESIDIO 2700 (LITER)
34	341333	1	TUBE Ø57/Ø52 L=1500 BLACK PE
35	370495	1	NOZZLE INJECTOR 5066-3.0
36	410362	1	BOLT HEX 8.8 SS M6X20
37	420582	1	BOLT HEX 8.8 DEL M8X20 FT A2
38	420641	1	BOLT HM 8X35/22 A2 SS DIN931
39	430286	1	BOLT HEX 8.8 DEL M12X30 FT
40	440663	1	SCREW 3/8" NR4 STAINLESS
41	440667	1	SCREW M3.5X12 SLOT STAINLESS
42	460143	1	LOCK NUT M8 SST A2 DIN985
43	460261	1	NUT HEX M6X1.00 LOCK DIN985 A2 SS
44	471126	1	WASHER, M8, Ø16/ 8.4X 1.6, SS
45	471127	1	WASHER, M12, Ø24/13X24X2.5 SS
46	480717	1	PIN E 5X40 SST
47	726463	1	FITT.DK S53 BULKHEAD W/GASKET
48	726465	1	FITT.DK S-93 BULKHEAD W/GASKET
49	726558	1	FITT.DK S53 STR. 3/4" W.ORING
50	726578	1	FITT.DK S53 PLUG WITH O-RING
51	726694	1	PLUG,S53,1/2"FBSP THD W.ORING
52	727223	1	FITT.S67 1.5" STRAIT S W/ORING
53	727225	1	FITT.DK S-93 ELB.2'PVC W/ORING
54	727227	1	FITT.DK S-93 STR.2" W/ORING
55	728525	1	FITT. S93 CONNECTOR W/O-RINGS
56	728526	1	FITT.DK S-67 CONNECT W/O-RINGS
57	728561	1	FITT.DK. S67M - S53F REDUCER
58	728562	1	FITT.DK S-93 TO S67 ADAPTOR
59	730084	1	BOTTOM VALVE S93 2"RG-3M

Pos.	parts-n°	order qty	description
60	927306	1	HOSE R X PE D8/D6 X 0012"BLACK
61	16135600	1	GUIDE FOR SIGHT GAUGE NAV/NCM
62	28029903	1	CLAMP HOSE GEAR P3/4"-S1" 6712
63	28030103	1	CLAMP HOSE GEAR P5/4-S1.5"6724
64	28030203	1	CLAMP HOSE T-BOLT S2" 235-67
65	28034100	1	CABLE F.LIQUID LEVEL IND. SS L=5M
66	39144000	1	VENTURI TUBE CM11
67	61036700	1	GUIDE TUBE F.FLOATER, L=1850, NV4000/CM4400
68	72072700	1	FITT.DK S-93 45D 2" PVC
69	72072900	1	FITT. S93 2-1/2" 45° S W/O-RING
70	72132600	1	CHECK VALVE SUBASSEMBLY S53
71	72358000	1	TANK RINSE LOW MOD.ASSMBLY NCM
72	72462900	1	S53
			2X EJEKTORNOZZLE AGITATION
73	72776200	1	PULLEY FLOAT RETROFIT
74	72776400	1	PULLEY SIGHT GAUGE COMPLETE
75	92702603	1	HOSE PVC SUCT GRAY 1-1/2"
76	92703203	1	HOSE R X3/4" X300PSI WP X0012"
77	92712403	1	HOSE R X1" X300PSI WP X0012"
78	97616803	1	DECAL - PRESIDIO TANK LEFT
78	97616903	1	DECAL - PRESIDIO TANK RIGHT
79	97617003	1	DECAL - HARDI 3D LOGO F.TANK 335 X 210
80	PR-DD0422	1	ROUND BLACK PLASTIC CAP D.60
81	PR-FEPR25043	1	REAR SUPPORT TANK PR2540
82	PR-FEPR25044	1	TANK FRONT SUPPORT PR2540
83	PR-FEPR25051	1	REAR SUPPORT TUBE TANK
84	PR-FEPR25057	1	FRONT SUPPORT TUBE TANK
85	PR-FEPR25063	1	REINFORCEMENT TANK RIGHT PR2540
86	PR-FEPR32096	1	BRACKET REAR TANK PR3240
87	PR-FEPR32151	1	BRACKET REAR LOWER TANK
88	PR-SX0020	1	TANK LID, MAIN TANK, PR
88	PR-SX0020-01	1	SEAL F.TANK LID, MAIN TANK, PR
89	PR-TC0190H	1	MAIN TANK 700 GAL, PRESIDIO

HYD. DRAWBAR CM5500/7000
E1200-HIN, 07:02:19

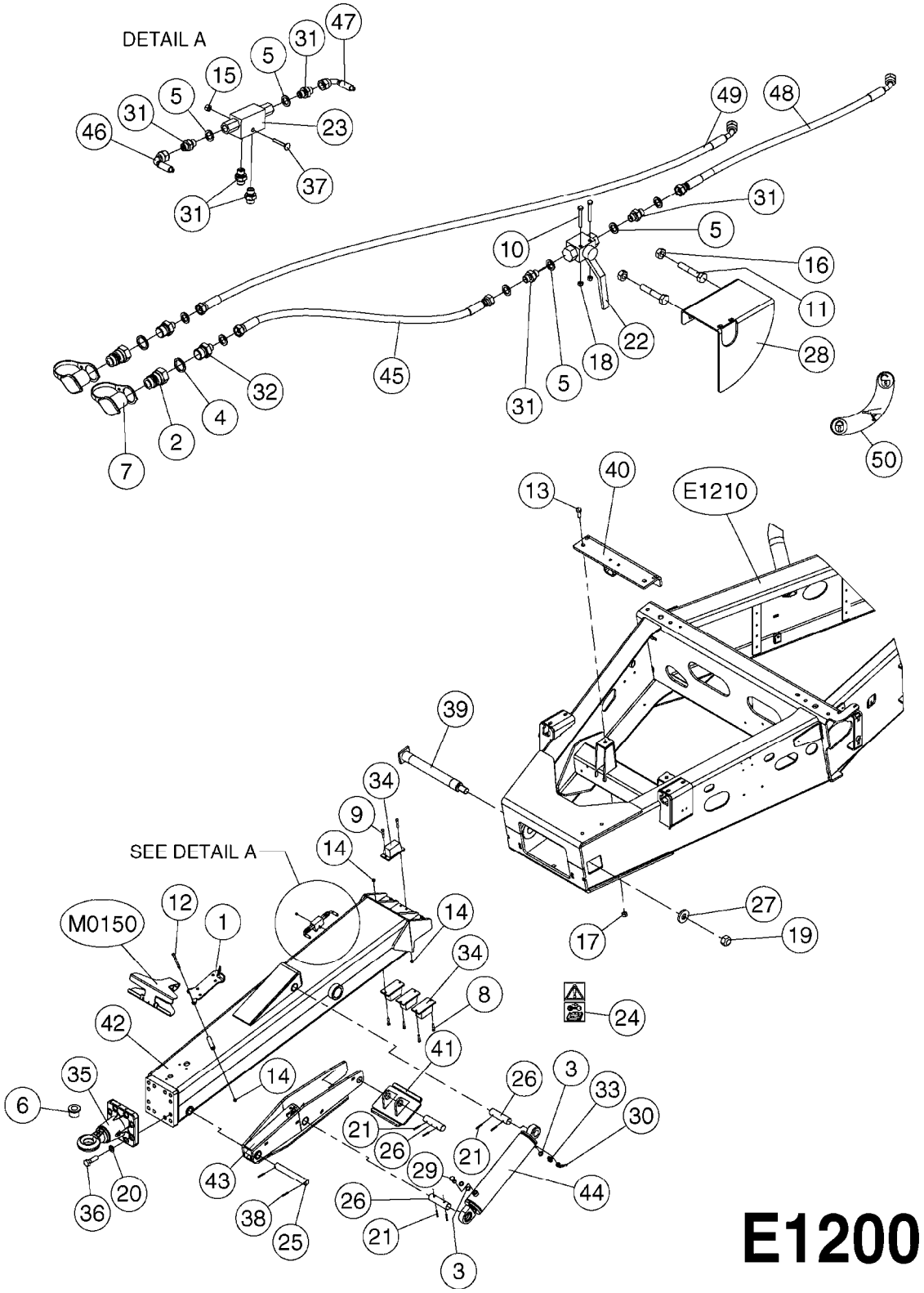

Agroparts: www.HARDI-INTERNATIONAL.com

HYD. DRAWBAR CM5500/7000
E1200-HIN, 07:02:19

Date 12.08.2020 11:40

Pos.	parts-n°	order qty	description
1	161923	1	SUPPORT PLATE F. PTO CM+
2	230311	1	QUICK COUPLING 1/2"
3	240866	1	DOWTYSEAL 3/8"
4	241356	1	DOWTYSEAL 1/2"
5	241404	1	DOWTY SEAL 1/4"
6	270608	1	BUSHING F. DRAWBAR NCM Ø50/Ø33
7	334206	1	DUST HOOD FOR HY-COUPLING
8	420641	1	BOLT HM 8X35/22 A2 SS DIN931
9	420781	1	BOLT HEX 8.8 DEL M8X50
10	421142	1	BOLT HEX 8.8 DEL M5X40
11	421224	1	BOLT HEX 8.8 DEL M10X55
12	421232	1	BOLT HEX 8.8 DEL M8X110
13	430581	1	BOLT HEX 8.8 DEL M16X40 FT
14	460143	1	LOCK NUT M8 SST A2 DIN985
15	460261	1	NUT HEX M6X1.00 LOCK DIN985 A2 SS
16	460423	1	NUT HEX M10X1.50 LOCK DIN985A2 SS
17	460585	1	LOCKING NUT M16 DIN985 A2 SS
18	461217	1	NUT HEX M5 LOCK
19	461316	1	NUT HEX LOCK M30X3.5 DIN 985
20	471180	1	LOCK WASHER NORDLOCK M20 ELZ
21	480733	1	PIN D6 X 40
22	781049	1	HYD. BALL VALVE
23	782141	1	VALVE COUNTER DOUBLE
24	978436	1	DECAL - WARNING! SERVICE
25	14047200	1	PIN D30.0 L= 223 /D6.0
26	14060300	1	PIN Ø35.0 L= 128/Ø6.0
27	16155900	1	DISC D70.0/ 31.0X10.0/RED
28	16160000	1	PLATE F. HYD. VALVE CM66/9000
29	23230400	1	BANJOBOLT 3/8 BSP
30	23233700	1	INSERT 9/16" ANGLE 45 DEG.
31	23234500	1	HEX NIPPLE 1/4" - 9/16"
32	23234800	1	HEX NIPPLE 1/2"-9/16"
33	23235800	1	HEX NIPPLE 3/8"-9/16" - 0.7mm
34	24267600	1	RUBBERSTOP 15/238 T=56 SS
35	28164100	1	SWIVEL HITCH D50/8 BOLT
36	43000803	1	BOLT HEX M20 X 70MM DEL - FT
37	44077000	1	BOLT M5X35 DIN 603 S/S
38	48082100	1	SPRING PIN Ø6x50 DIN1481 RST
39	61037800	1	PIN F. STEERING 6600
40	61038500	1	BRACKET FOR DRAWBAR NCM 6600
41	61081000	1	FOOT F. SUPPORT LEG CM55/7000
42	63122800	1	DRAWBAR CM55/7000
43	63123000	1	SUPPORT LEG F. CM55/7000
44	78132600	1	DOB.CYL.Ø90/50-350/Ø35
45	78509800	1	HY.HO.1/4"L= 1900 STR-STR
46	78511200	1	HY.HO.1/4"L= 1250 90°-90° A=180
47	78525900	1	HY.SL.1/4' L= 820 V-V45° A= 90GR
48	78526000	1	HY.HO.1/4"L= 1500 STR-45°
49	78526100	1	HY.HO.1/4"L= 3500 STR-45°
50	97814500	1	DECAL JACK STAND LOCK VALVE

FRAME - CM45/55/7000
E1210-HIN, 08:02:19

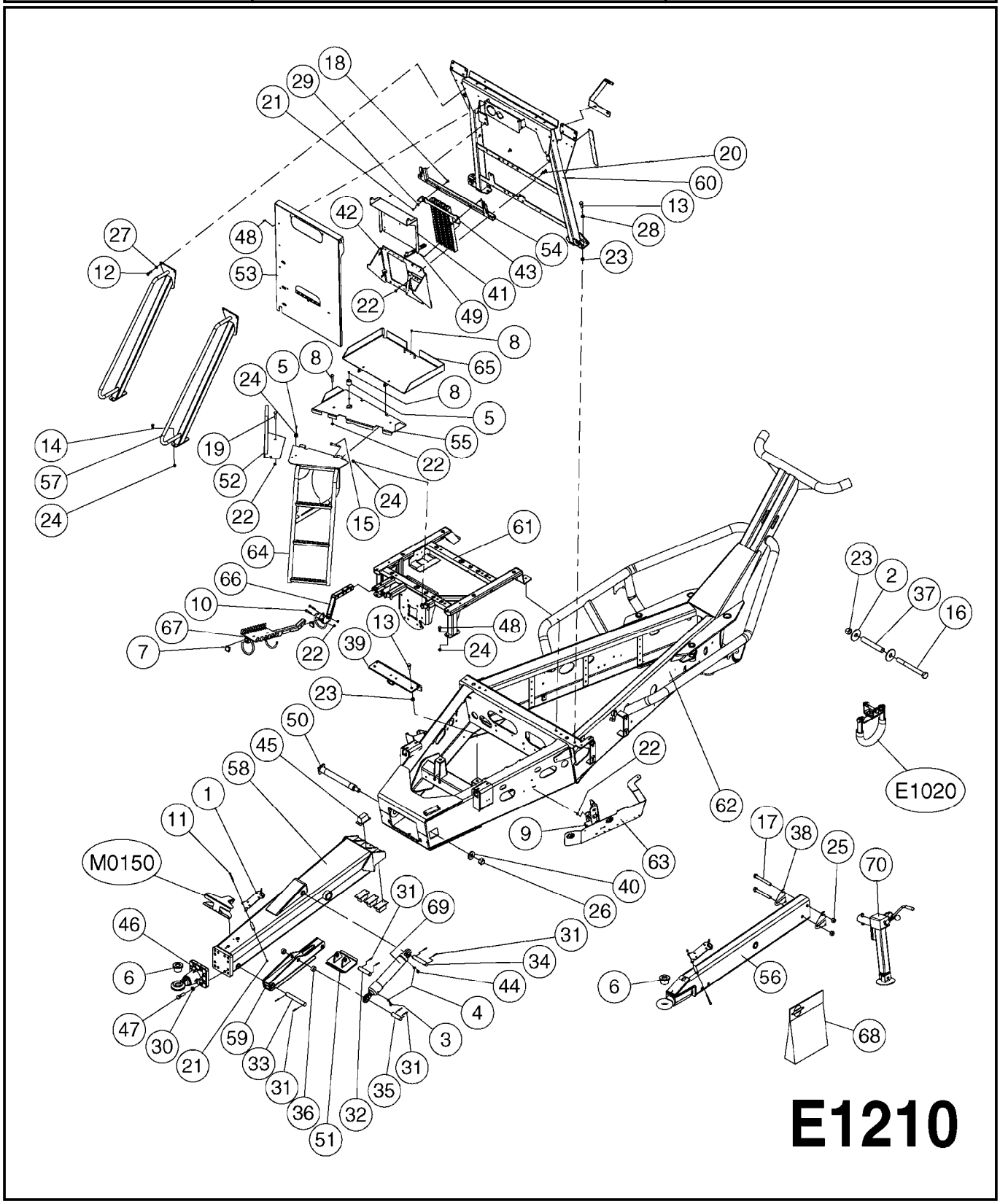

FRAME - CM45/55/7000
E1210-HIN, 08:02:19

Date 12.08.2020 11:40

Pos.	parts-n°	order qty	description
1	161923	1	SUPPORT PLATE F. PTO CM+
2	163074	1	WASHER D54/D17X3
3	232169	1	BANJO BOLT 1/4" BSP DELTA
4	241404	1	DOWTY SEAL 1/4"
5	242568	1	DOOR STOP, FEMALE
6	270608	1	BUSHING F. DRAWBAR NCM Ø50/Ø33
7	334571	1	PLUG 40x40x2 F.SQ.TUBE
8	410185	1	BOLT HEX 8.8 DEL M6X16
9	420604	1	BOLT HEX 8.8 DEL M10X25 FT DIN933
10	420906	1	BOLT HEX 8.8 DEL M10X60
11	421232	1	BOLT HEX 8.8 DEL M8X110
12	430286	1	BOLT HEX 8.8 DEL M12X30 FT
13	430581	1	BOLT HEX 8.8 DEL M16X40 FT
14	430721	1	BOLT HEX 8.8 DEL M12X40 FT
15	430802	1	BOLT HEX 8.8 DEL M12X75
16	430884	1	BOLT HEX 8.8 DEL M16X160
17	430886	1	BOLT HEX 8.8 DEL M20X160
18	440695	1	BOLT CARRIAGE M8X25
19	440718	1	BOLT CRG M10 X 65 DEL
20	440737	1	BOLT CARRIAGE M10x25 SS
21	460143	1	LOCK NUT M8 SST A2 DIN985
22	460423	1	NUT HEX M10X1.50 LOCK DIN985A2 SS
23	460585	1	LOCKING NUT M16 DIN985 A2 SS
24	460703	1	NUT HEX M12X1.75 LOCK DIN985A2 SS
25	460806	1	NUT HEX M20X2.50 LOCK DIN985A2 SS
26	461316	1	NUT HEX LOCK M30X3.5 DIN 985
27	471127	1	WASHER, M12, Ø24/13X24X2.5 SS
28	471128	1	WASHER, M16, Ø30/17.0X 3.0, SS
29	471132	1	WASHER D24/D8.4 X 2 SS
30	471180	1	LOCK WASHER NORDLOCK M20 ELZ
31	480733	1	PIN D6 X 40
32	14047100	1	PIN D30.0 L= 132 /D6.0
33	14047200	1	PIN D30.0 L= 223 /D6.0
34	14047300	1	PIN D30.0 L= 161 /D6.0
35	14047400	1	PIN D30.0 L= 104 /D6.0
36	15073000	1	THREADED PIPE 1-1/4" L=20
37	15075900	1	BUSHING D20/1.5 L=122
38	16144700	1	SHIM F. DRAWBAR NCM4400
39	16154800	1	PLATE F.REAR DRAWBAR ANCHOR
40	16155900	1	DISC D70.0/ 31.0X10.0/RED
41	16358100	1	PLATE 2 X 629 X 480 / 2 BENDS
42	16358200	1	PLATE 6 X 868 X 475 / 4 BENDS
43	16358300	1	PLATE 6 X 561 X 460 / 2 BENDS
44	23234500	1	HEX NIPPLE 1/4" - 9/16"
45	24267600	1	RUBBERSTOP 15/238 T=56 SS
46	28164100	1	SWIVEL HITCH D50/8 BOLT
47	43000803	1	BOLT HEX M20 X 70MM DEL - FT
48	45001500	1	SCREW THUMB PLASTIC HEAD M6x20
49	45006200	1	BOLT M6X16 ALLEN DIN 912 RST A4
50	61037800	1	PIN F. STEERING 6600
51	61039700	1	FOOT F. HYD. JACK NCM6600
52	61039800	1	HANDRAIL F. NCM6600 PLATEFORM
53	61062600	1	FRONT COVER PLATE CM55/7000 PAINTED
53	61091600	1	FRONT COVER PLATE CM4500 PAINTED
54	61062900	1	TANK LOCK TSPT UPRT COM11 PAINTED
55	61072600	1	DECKPLATE FRONT CM4500 PAINTED
55	61074300	1	DECKPLATE FRONT CM55/7000 PAINTED
56	63033500	1	DRAWBAR SWIVEL D50 NCM 4400
57	63033700	1	HANDRAIL FOR PLATFORM PAINTED
58	63043900	1	DRAWBAR ADJUSTABLE CM6600
59	63045400	1	SUPPORT LEG HYD. JACK 6600

Pos.	parts-n°	order qty	description
60	63096700	1	TRANSPORT FRAME CM4500 PAINTED
60	63097100	1	TRANSPORT FRAME CM55/7000 PAINTED
61	63097300	1	FLUID PLATFORM CM55/7000 PAINTED
61	63143700	1	FLUID PLATFORM CM4500 PAINTED
62	63113100	1	FRAME CM4500 PAINTED
62	63113300	1	FRAME CM55/7000 PAINTED
63	63163500	1	CONSOLE F.VALVES CM45/55/7000
64	63113900	1	LADDER CM11
65	63114100	1	DECKPLATE REAR CM4500 PAINTED
65	63151600	1	DECKPLATE REAR CM55/7000 PAINTED
66	63114300	1	HOSE HOLDER, REAR, CM 45/55/7000, RED
67	63114500	1	HOSE HOLDER, FRONT, CM 45/55/7000, RED
68	72280700	1	REPAIR KIT F.JACK STAND
69	72387400	1	MOUNTED 6600 HYD JACK
70	72855900	1	SUPPORT LEG F.CM4500
70	78603500	1	SUPPORT LEG F.CM55/7000

FRAME - REAR W/PARALIFT
CM45/55/7000
E1220-HIN, 26:07:17

Date 12.08.2020 11:40

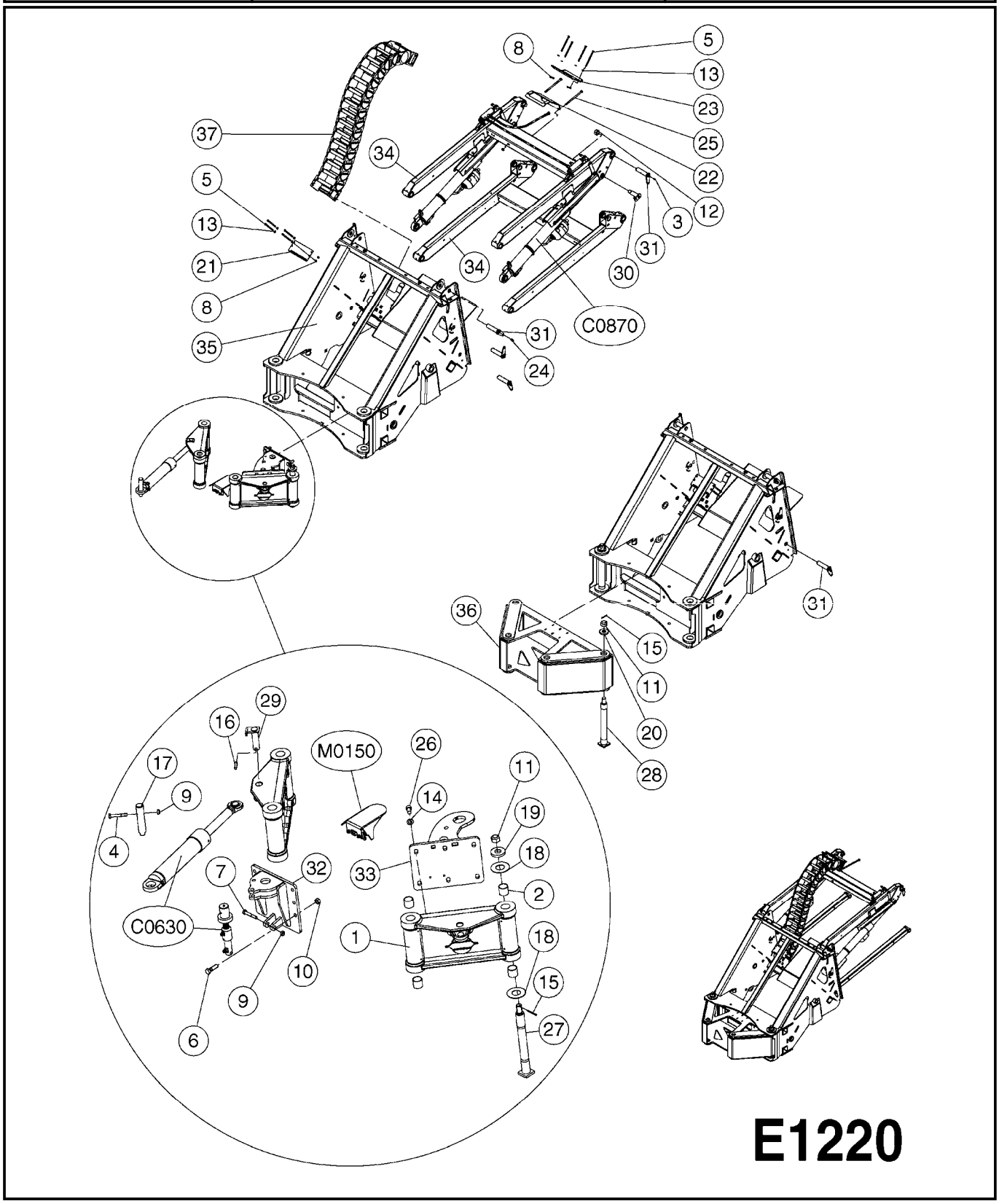

Agroparts: www.HARDI-INTERNATIONAL.com

FRAME - REAR W/PARALIFT
CM45/55/7000
E1220-HIN, 26:07:17

Date 12.08.2020 11:40

Pos.	parts-nº	order qty	description
1	111708	1	STEER ARM NCM 4400 PAINTED RED
1	111710	1	STEER ARM NCM 6600 PAINTED RED
2	210776	1	BUSHING F.TWIN STEERING ARM
2	210865	1	BUSHING 40mm40mm DU
3	283699	1	GREASE NIPPLE M6X1
4	421222	1	BOLT HEX 8.8 DEL M10X75 FT
4	430846	1	BOLT HEX 8.8 DEL M12X80
5	421256	1	BOLT HEX 8.8 SS M8X130
6	430765	1	BOLT HEX 8.8 DEL M16X55
7	430802	1	BOLT HEX 8.8 DEL M12X75
8	460143	1	LOCK NUT M8 SST A2 DIN985
9	460423	1	NUT HEX M10X1.50 LOCK DIN985A2 SS
9	460703	1	NUT HEX M12X1.75 LOCK DIN985A2 SS
10	460585	1	LOCKING NUT M16 DIN985 A2 SS
11	460747	1	NUT HEX M24 LOCK
11	461316	1	NUT HEX LOCK M30X3.5 DIN 985
12	460747	1	NUT HEX M24 LOCK
13	471126	1	WASHER, M8, Ø16/ 8.4X 1.6, SS
14	471128	1	WASHER, M16, Ø30/17.0X 3.0, SS
14	471129	1	WASHER, M20, Ø37/21.0X 3.0, SS
15	480384	1	PIN COTTER 3/16 x 1-1/2"
16	480502	1	PIN RETAINING M10X50 DIN 1481
17	14051400	1	PIN Ø35.1/Ø12 L=164
17	14051700	1	PIN D30 L=164
18	16125200	1	DISC D90/42 X 2 RED
18	16125300	1	DISC D90/42 X 3 RED
18	16155700	1	DISC D115/52 X 2 RED
18	16155800	1	DISC D115/52 X 3 RED
19	16155900	1	DISC D70.0/ 31.0X10.0/RED
19	16375500	1	WASHER 10.0X60X25 RED
20	16375500	1	WASHER 10.0X60X25 RED
21	16384200	1	CLAMP BKT FOR CABLE TRAY
22	16384400	1	CABLE TRAY BRKT.BOTTOM PAINTED
23	16384600	1	CABLE TRAY BRKT.TOP PAINTED
24	28112100	1	GREASE FITTING Ø6 90GR M6
25	42126400	1	BOLT HEX M10X180 A4-80
26	45001600	1	M16 X 30 8.8 CYL. SCREW
26	45001800	1	SCREW ALLEN M20X45 12.9 DE
27	61033700	1	PIN F. STEERING 4400
27	61037800	1	PIN F. STEERING 6600
28	61033700	1	PIN F. STEERING 4400
29	61036400	1	PIN D29.8 L=97
29	61038100	1	PIN D34.8
30	61061200	1	PIN, Ø30/M24 L=105
31	61061300	1	PIN, Ø30 L=122
32	63036100	1	CONSOLE F. TRAPEZE LOCK CM "05
33	63036200	1	LATCH F. TRAPEZE LOCK CM "05"
33	63044000	1	LATCH F. TRAPEZE LOCK CM6600
34	63096000	1	Paralift Arm CM11 RED
35	63096500	1	REAR FRAME CM4500 PAINTED
35	63146200	1	REAR FRAME CM55/7000 PAINTED
36	63096900	1	MOUNT F.REAR FRAME CM4500 RED
37	72980400	1	COMPLETE CABLE TRAY FOR PARALIFT

FRAME - ALPHA EVO ECODRIVE
E1230-HIN, 09:01:17

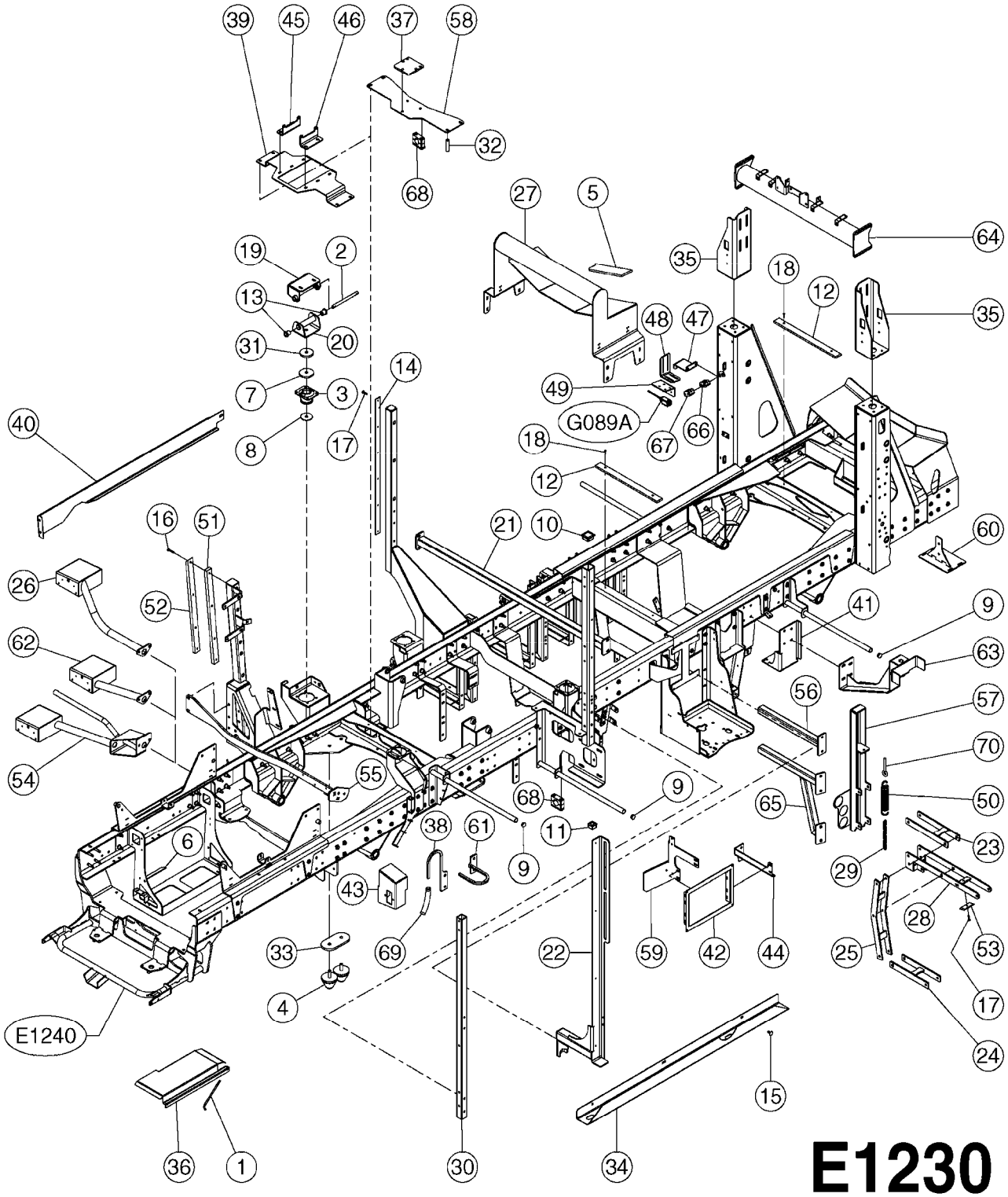

Agroparts: www.HARDI-INTERNATIONAL.com

FRAME - ALPHA EVO ECODRIVE
E1230-HIN, 09:01:17

Date 12.08.2020 11:40

Pos.	parts-n°	order qty	description
1	148015	1	BATTERY TENSIONER, ALPHA
2	148113	1	PIN Ø16 L215
3	248095	1	CAB MOUNT FLEXIBLE
4	248120	1	BUFFER 95X80M16X45 60NR
5	248226	1	RUBBER BAND, REGUPOL 8012 90X10
6	248257	1	FOAM, ADHESIVE, 20X5
7	278207	1	UPPER WASHER 131003/ROS
8	278208	1	LOWER WASHER 131003-RO
9	288666	1	CLEAR PLASTIC PLUG, GPN 300 F21
10	288780	1	PLASTIC PLUG SQUARE 60 BLACK
11	334571	1	PLUG 40x40x2 F.SQ.TUBE
12	398003	1	PLASTIC SHIM 12x50x550
13	398047	1	BUSH Ø16X24 L30
14	398188	1	GUIDE RAIL 40X5 L985 6 HOLES
15	440737	1	BOLT CARRIAGE M10x25 SS
16	458010	1	FLAT HEAD SCREW M8X45 SS A2 DIN7991
17	458032	1	BOLT M8X30 8.8 DIN7991D SS
18	458076	1	SCREW FS M 5-25 SST A2 DIN963
19	618297	1	CAB UPPER BRACKET, ALPHA
20	618298	1	LOWER SUPPORT F. CABINE ALPHA
21	618637	1	REINFORCEMENT CROSSING, ALPHA
			LENGTH = 49"
21	61025803	1	BRACKET, TRANS, CENTER, TUBE, AL
			LENGTH = 63"
22	618640	1	GAUGE BRACKET, ALPHA
23	618661	1	TURBOFILLER UPPER ARM, GC1,5, ALP
24	618662	1	BRAS INF INCORPORAT GS1,5 ALP+
25	618663	1	BRAS INTERM INCORPO GS1,5 ALP+
26	638659	1	$$FR LIGHT BRACKET 90° GC1,1-1,2
27	638801	1	TANK FRONT BRACKET, ALPEVO 35-41
28	638899	1	BRAS INF HAUT INCOR GS1,5 ALP+
29	981718	1	CHAIN Ø5 35X10 103050 GALVA
30	15001201	1	$$SUPPORT TRAVERSE ALPHA PLUS
31	16004201	1	SHIM Ø80X16 L10 CAB
32	16027101	1	$$SUPPORT BLOC HYD AV ALP+ EP.5
33	16100701	1	FRONT AXLE STOP SHIM, SPRING SUSP, ALPHA
34	16190601	1	HYD HOSES GUTTER, ALPHA
35	16324001	1	CROSSING BRACKET, ALPEVO 4100
36	16364501	1	BATTERY SHIELD, ALPHA
37	16386601	1	CALE BLOC HYDRAULIQUE AVANT
38	16455801	1	RING FLEXIBLE ALPHA+
39	16480001	1	FRONT HYD BLOCK BRACKET, SAPE
40	16573601	1	RIGHT FOOTBRIDGE SHIELD, T3B EVO
41	16589201	1	SUPPORT BLOC PULVE T3B ALP EVO
42	16608301	1	JOBCOM BRACKET, ALPEVO
43	16623501	1	$$SUPPORT COUPE BATT ALPEVO T3B
44	16629901	1	JOBCOM BRACKET, ALPHA EVO
45	16639201	1	FIXATION BLOC SAPE AVD T3B EVO
46	16639301	1	FIXATION BLOC SAPE AVG T3B EVO
47	16651401	1	FIX BRACKET FOR BOOM SENSOR
48	16651501	1	SUPPORT REGLABLE CAPTEUR RAMPE
49	16651601	1	CARTER CAPTEUR RAMPE
50	22001701	1	DRAW SPRING Ø EXT45 L235 Ø7 23.5 SPIRES
51	39004701	1	SLIDE 40X20 L630 3 HOLES
51	39004801	1	SLIDE 40X20 L715 4 HOLES
52	39004701	1	SLIDE 40X20 L630 3 HOLES
52	39012401	1	SLIDE 40X20 L715 4 HOLES
53	39012101	1	SLIDE 35X5 L90 1 HOLE
54	61018001	1	FR MUDGUARD BRACKET, 180° ALPEVO
54	61048001	1	FR LIGHT BRACKET, AGROLUNA EVO
55	61020301	1	FOOTBRIDGE FRONT CROSSING, ALPEVO

FRAME - ALPHA EVO ECODRIVE
E1230-HIN, 09:01:17

Date 12.08.2020 11:40

Pos.	parts-nº	order qty	description
56	61026101	1	TURBOFILLER BRACKET L510
57	61032401	1	FASTFILLER PARALIFT BRACKET 3 HOLES
58	61037901	1	HP BLOC BRACKET, T3B ALPEVO
59	61040101	1	SPRAY+STEP BRACKET, ALPEVO
60	61043001	1	SUPPORT CALE TUV ALPHA EVO
61	61043301	1	HYD HOSE RING XXL GC 1,50-1.65M ALPEVO
62	63000001	1	FR LIGHT BRACKET, GC1,5M, ALPHA
63	63044901	1	BLUE/GREY REEL BRACKET, ALPHA
64	63063601	1	GALLOW CROSSING ALPEVO 4100 V2
65	63067801	1	TURBOFILLER BRACKET, GC1,5, ALPEVO
66	78629401	1	COLLAR 322 PP BLACK
67	78629601	1	COLLAR 322 PP NOIR DP AS W5
68	78629701	1	PIPE CLAMP 5040 PP DPAL AS W5
69	92703203	1	HOSE R X3/4" X300PSI WP X0012"
70	PI85AB4715	1	EYE BOLT M12-130/75 900H053

	Agroparts: www.HARDI-INTERNATIONAL.com	
HARDI	FRAME - RIVETED ALPHA EVO ECODRIVE E1240-HIN, 09:01:17	Page 0 Date 12.08.2020 11:40

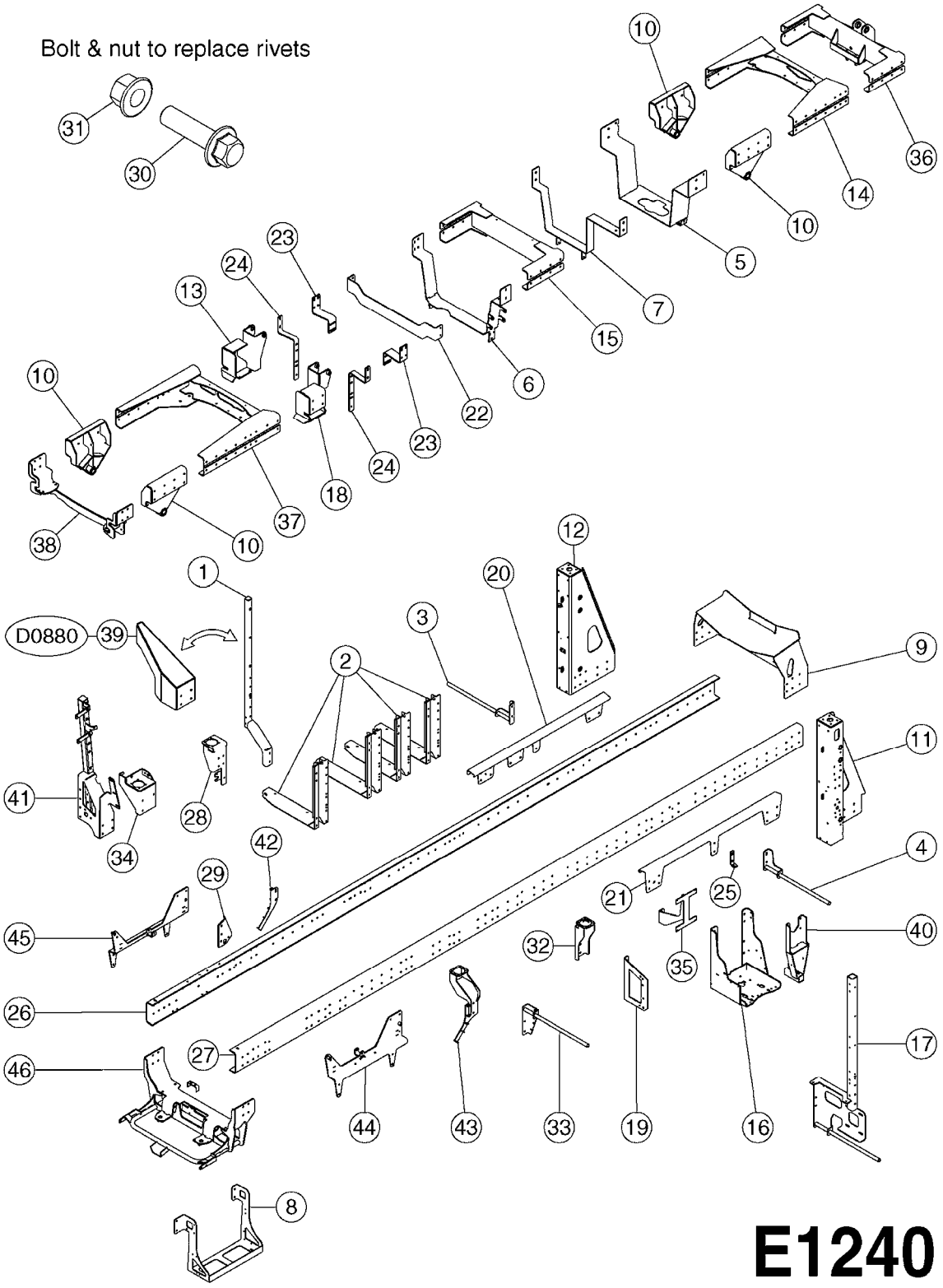

FRAME - RIVETED ALPHA EVO
ECODRIVE
E1240-HIN, 09:01:17

Date 12.08.2020 11:40

Pos.	parts-n°	order qty	description
1	618357	1	REAR RIGHT BRACKET AH11
			Early models only (front)
1	61053501	1	RIGHT BRACKET, FIX-REAR FOOTBRIDGE, ALPHA V2
			Early models only (rear)
2	618520	1	FUEL TANK BRACKET, ALPHA
3	618538	1	RR MUDGUARD 180° BRACKET, ALPHA
4	618539	1	RL MUDGUARD 180° BRACKET, ALPHA
5	618623	1	LOWER CRADLE, TANK 3500-4100L, ALPEVO II
6	618624	1	FRONT CRADLE, RINSING TANK 410L, ALPEVO
7	618632	1	REAR CRADLE, RINSING TANK 410L, ALPHA
8	618710	1	BATTERY BRACKET, V2 ALPHA
9	618873	1	REAR BRACKET, PRINCIPAL TANK, V2 ALP
10	638300	1	PIVOT Ø30, SPRING SUSP, ALPEVO
11	638343	1	LEFT PARALIFT GALLOW, Ø25 ALPHA
12	638349	1	$$RIGHT PARALIFT GALLOW, Ø25 ALPHA
13	638377	1	RIGHT SPRING BEAM, V2 ALP
14	638633	1	REINFORCING CROSSBAR
15	638706	1	CHASSIS BEAM, ALPHA
16	638750	1	PUMP EC500-464 BRACKET, ALPHA
16	61041701	1	ALTEK PUMP, ALPHA EVO
17	638846	1	FOOTBRIDGE BRACKET+HAND WASHER ALPHA
18	638958	1	LEFT SPRING BEAM, V2 ALP
19	16144201	1	VALVE BRACKET, SIDE CABIN, ALPHA
20	16176801	1	TANK RIGHT BRACKET, ALP 35-41-42
21	16176901	1	TANK LEFT BRACKET, ALP 35-41-42
22	16190501	1	TOLE S235JRG2 EP 6 S 1969 C²
23	16298901	1	OIL TANK BRACKET, ALP
24	16299001	1	OIL TANK BRACKET, ALPHA
25	16321601	1	FLOWMETER BRACKET, ALPHA
26	16426101	1	RIGHT SPAR, ALPEVO 35-41-42
27	16426201	1	LEFT SPAR, ALPEVO 35-41-42
28	16556701	1	$$RL CAB BRACKET, ALPHA EVO
29	16615901	1	FR LIGHT BRACKET, ALPEVO T3B
30	43002001	1	SCREW H SEAT M12-40 CL10.9
30	43002101	1	SCREW H SEAT M12-45 CL10.9
30	43002201	1	SCREW H SEAT M12-50 CL10.9
31	46000101	1	SELF-LOCKING NUT M12
32	61002501	1	RL CAB BRACKET, ALPHA
33	61004801	1	FL MUDGUARD BRACKET, ALPHA
34	61030301	1	FR CAB BRACKET. ALPHA EVO
35	61037201	1	ELECT BOX BRACKET, ALPHA EVO V2
36	63033901	1	REAR BEAM, SPRING SUSPENSION, ALPEVO
37	63048701	1	FRONT BEAM, SPRING SUSP, ALPEVO
38	63049501	1	ENGINE REAR BRACKET, T3B 2012 ALPHA EVO
39	63049803	1	BRACKET, TRANS, RH, AL
40	63053801	1	TURBOFILLER BRACKET, H562, ALPEVO
41	63061401	1	FR FOOTBRIDGE BRACKET, T3B-T4F, ALPEVO
42	63065801	1	RIGHT BRACKET, A/C HOSE, ALPHA
43	63067501	1	FL CAB BRACKET, ALPHA EVO
44	63074601	1	LEFT BONNET BRACKET, SPRING SUSP, ALPEVO
45	63074701	1	RIGHT BONNET BRACKET, SPRING SUSP, ALPEVO
46	63085601	1	FRONT BEAM, ENGINE T3B, ALPEVO V2

RINSE/CLEAN WATER TANKS - ALPHA
E1250-HIN, 15:05:17

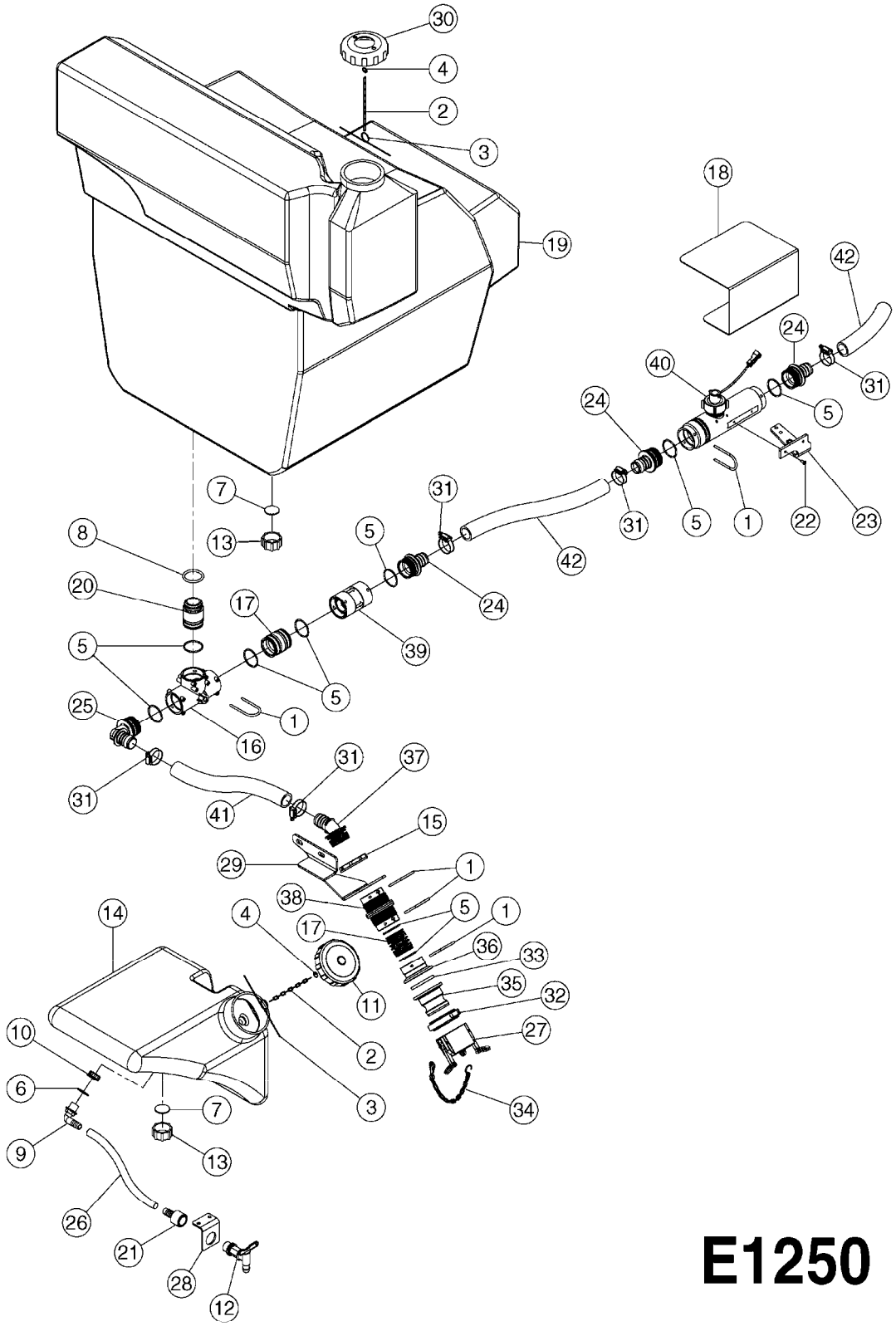

E1250

RINSE/CLEAN WATER TANKS - ALPHA
E1250-HIN, 15:05:17

Date 12.08.2020 11:40

Pos.	parts-n°	order qty	description
1	145996	1	FITT.DK S-67 FORK
2	198150	1	CHAIN DOUBLE LINK Ø1,1 L200
3	228039	1	LID RETAINER FOR CHAIN
4	228040	1	RING Ø15
5	242353	1	O-RING 3 X 44.2 VITON
6	248071	1	SEAL 1/2' 21X33X2
7	248072	1	RUBBER GASKET Ø37 TH2.5
8	248112	1	O-RING R5,33X43,82 NBR 80SHORES
9	288149	1	HOSE TAIL 90° BSP1/2" FOR HOSE Ø15
10	288235	1	NUT 1/2' 2052020
11	288236	1	TANK CAP Ø122
12	288237	1	DRAIN TAP WITH SEAL
13	288344	1	CAP DRAIN TANK (543C)
14	288507	1	HAND WASHING TANK 15L YELLOW
15	322108	1	FITT.DK S-67 BULKHEAD NUT
16	322224	1	FITT.DK S-67 TEE
17	334573	1	FITT.DK S-67 CONNECTOR
18	358161	1	CARTER CAPTEUR DEBIT ALP+ EP.2
19	358268	1	RINSE TANK 410L ALPHA
20	398066	1	CONNECTION G1'1/2-S67
21	398167	1	HOSETAIL BSP3/4"F FOR HOSE Ø16
22	458067	1	SCREW PT KA 50X16 WN1412 SST A2
23	618862	1	SUPPORT DEBITMETRE ALPHA
24	726561	1	FITT.DK S-67 STR.1-1/4" O-RING
25	726573	1	FITT. S67 5/4" 90° W/O-RING
26	927708	1	HOSE Ø15X19 PVC TRANSP 2 BAR
27	10531003	1	CAP F.MALE QUICK COUPLER 2"
28	16321401	1	BALL VALVE BRACKET
29	16609501	1	SUPPORT RACCORD 2"1/2 ALPEVO
30	28027001	1	TANK CAP Ø122 DRILLED 1 HOLE Ø52 + 2 HOLES Ø10
31	28030103	1	CLAMP HOSE GEAR P5/4-S1.5"6724
32	28034503	1	CLAMP F. 2" STD BANJO FLANGE
33	28034603	1	GASKET F. 2" FP BANJO FLANGE
34	28040703	1	SAFETY CHAIN F.CV BLACK PTO
35	28049903	1	COUPLER, 2" FP, MALE, FLANGED
36	39002003	1	FITT S67/2" FP BANJO FLANGE
37	72433100	1	FITT.DK S-67 45° 1-1/4"W/ORING
38	72819200	1	CHECK VALVE S67 2012 THREADED
39	72819300	1	CHECK VALVE S67 2012 NO THREAD
40	73299601	1	PREP DEBITMETRE D36 CUV RINCAG
41	92734403	1	HOSE R X5/4" X200PSI WP X0012"
42	92738900	1	HOSE R X PVC X 1-1/4" 0012"

	Agroparts: www.HARDI-INTERNATIONAL.com	
HARDI	LOCKER & CLEAN WATER TANK CM45/55/7000 E1260-HIN, 31:01:17	Page 0 Date 12.08.2020 11:40

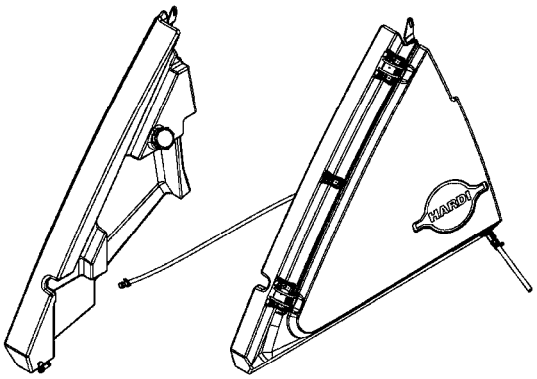

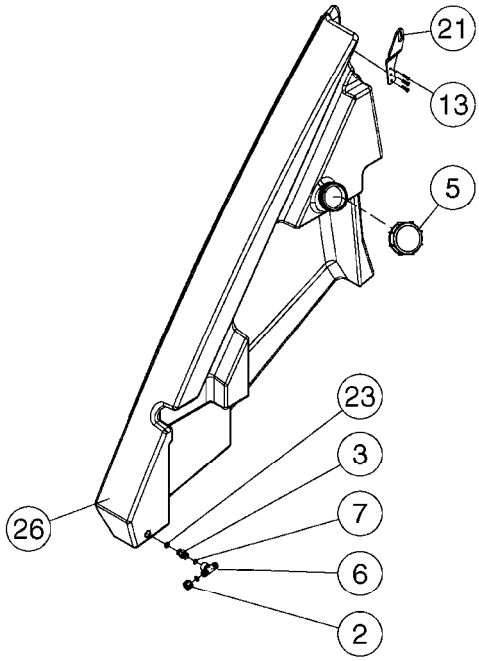

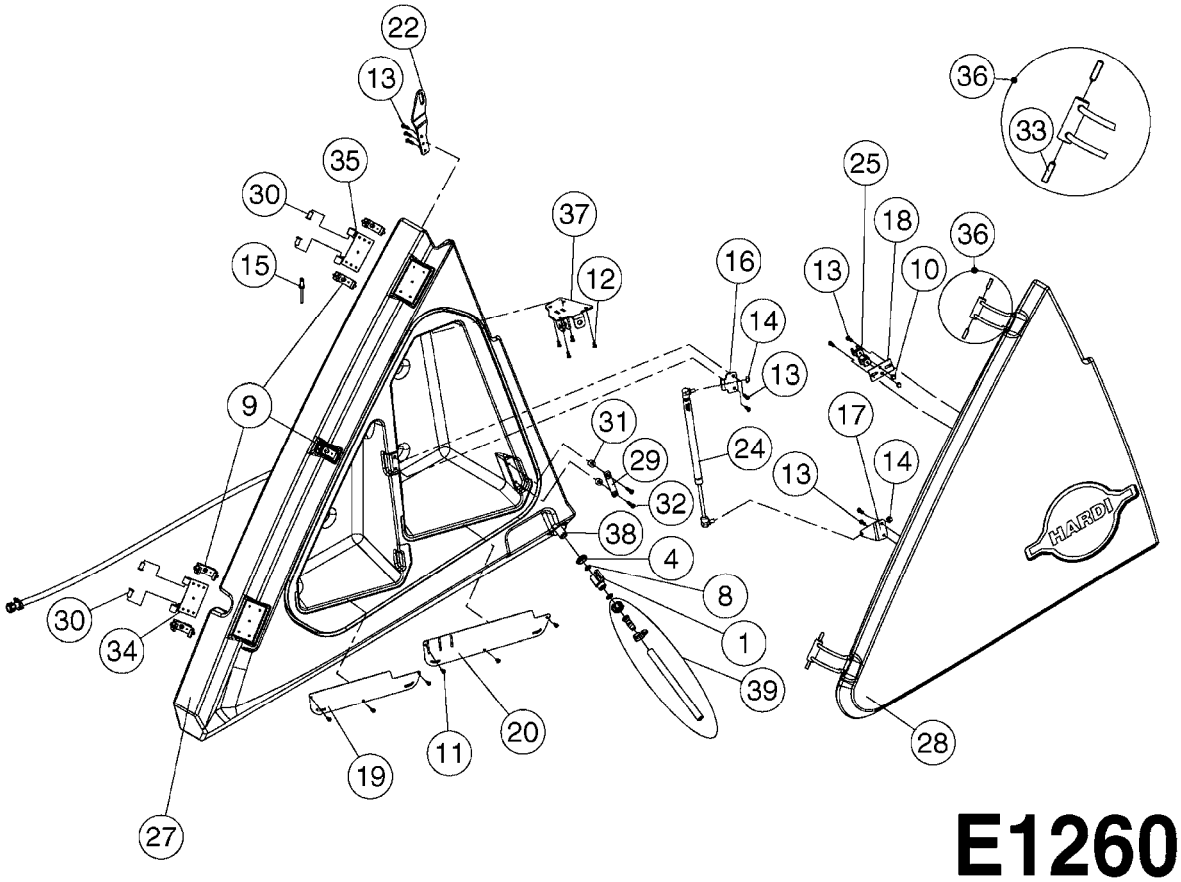

E1260

Agroparts: www.HARDI-INTERNATIONAL.com

LOCKER & CLEAN WATER TANK
CM45/55/7000
E1260-HIN, 31:01:17

Date 12.08.2020 11:40

Pos.	parts-nº	order qty	description
1	281551	1	BALL VALVE 1/2"
2	320272	1	FITT.DK CAPNUT 3/8' BSP
3	320725	1	FITT.DK NIPPLE 3/8"-3/8" BSP
4	321307	1	FITT.DK NUT 1/2" BSP JAMB
5	321322	1	SCREW CAP F. S80 X 4
6	322072	1	FITT.DK TEE 3/8'X3/8'X3/8' BSP
7	330013	1	O-RING 2.5 X 10 PUR
8	330212	1	O-RING D19/D14X2.4 F.1/2"NUT
9	334523	1	PIPE HOLDER Ø51.5
10	410907	1	SET SCREW M6 X 8 DIN 933-A2 INO
11	440673	1	SCREW F.PLASTIC 5X12 SS
12	440709	1	SCREW 60X12 CHEM.FILL HANDLE
13	440719	1	SCREW F.PLASTIC KB60x20 SS
14	460143	1	LOCK NUT M8 SST A2 DIN985
15	480806	1	RIVET, POP, Ø4.8X14/Ø9.5 SS
15	480809	1	BLIND RIVET, EMHART ACD616ASM
16	16367300	1	BRACKET F.GASCYL.CM7000 RED
17	16368500	1	BRACKET F.GASCYL.CM7000 RED
18	16368700	1	LOCKPLATE F.COVER CM, RED
19	16368900	1	SHELF EDGE CM45/55/7000 RED
20	16369100	1	SHELF EDGE CM45/55/7000 RED
21	16382400	1	HOLDER F. SIDE SHIELD R. CM'11,
22	16382600	1	HOLDER F. SIDE SHIELD L. CM'11
23	24262700	1	O-RING 9.12 X 3.5 NITRILE
24	28114900	1	GAS CYLINDER L=485/200 F=100N
25	28115100	1	RODHOLDER D18 VVS R04 2940 018
26	35181500	1	SIDE SHIELD, RIGHT, CM'11
27	35181600	1	SIDE SHIELD LEFT, CM'11
28	35181700	1	LID FOR LEFT SHIELD CM
29	39140500	1	TAP Ø16.0 L= 75 2xØ6.5
30	39140900	1	BUSH.Ø 15.0/ 8.25 L= 21
31	39141800	1	BUSHING Ø16.0/ 6.5 L= 12
32	44076300	1	PT SCREW 60X35 WN5451 RSF TORX
33	45006700	1	SCREW M 8X 30 A2 SS DIN914
34	61074600	1	LOWER HINGE F.SAFETY LOCKER LID
35	61074700	1	UPPER HINGE F.SAFETY LOCKER LID
36	61075400	1	HINGE F.SAFETY LOCKER LID, CM
37	61075600	1	BRACKET F. HC6200
38	72733900	1	HOSE ASSY, 3/8"X 1850 1X1/2"OML
39	72734000	1	HOSE ASSY,1/2"X250 1/2"OML

WHEELS FOR ALPHA
E1270-HIN, 06:02:17

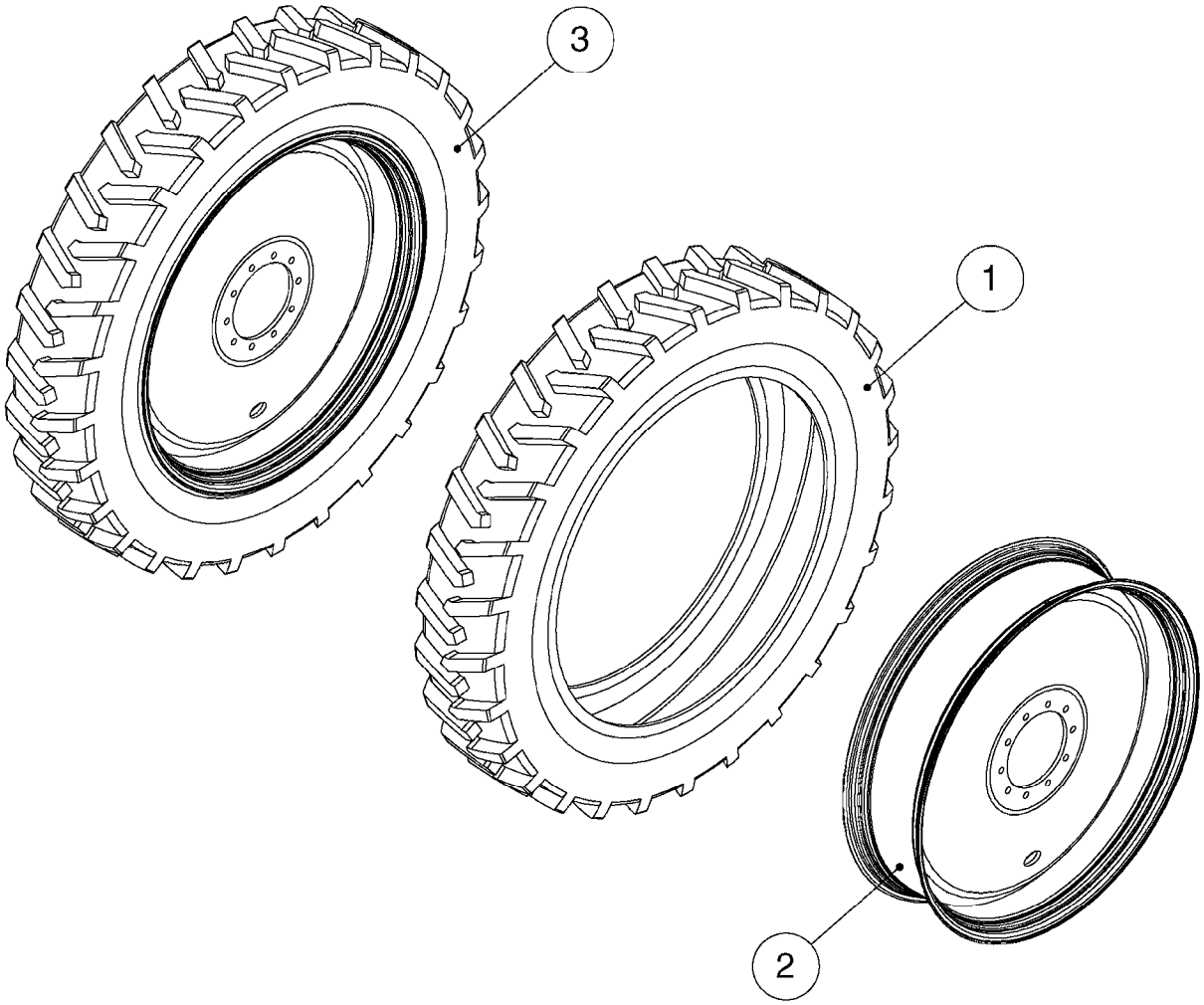

E1270

Agroparts: www.HARDI-INTERNATIONAL.com

WHEELS FOR ALPHA
E1270-HIN, 06:02:17

Date 12.08.2020 11:40

Pos.	parts-nº	order qty	description
1	28093203	1	TIRE, 380/90 R50, ULTRASPRAY, 170D
1	28097503	1	TIRE, 320/90 R54, ULTRASPRAY, 162D
2	28097303	1	WHEEL, 50X13" 10B/13.19BC/11.06P
2	28097403	1	WHEEL, 54X11" 10B/13.19BC/11.06P
3	70144103	1	WHEEL/TIRE, 380/90R50, 60MM INSET, LH
3	70144203	1	WHEEL/TIRE, 380/90R50, 60MM INSET, RH
3	70144403	1	WHEEL/TIRE, 320/90R54, 90MM INSET, LH
3	70144503	1	WHEEL/TIRE, 320/90R54, 90MM INSET, RH

MECH. TANK GAUGE
CM4500/5500/7000
E1280-HIN, 26:04:17

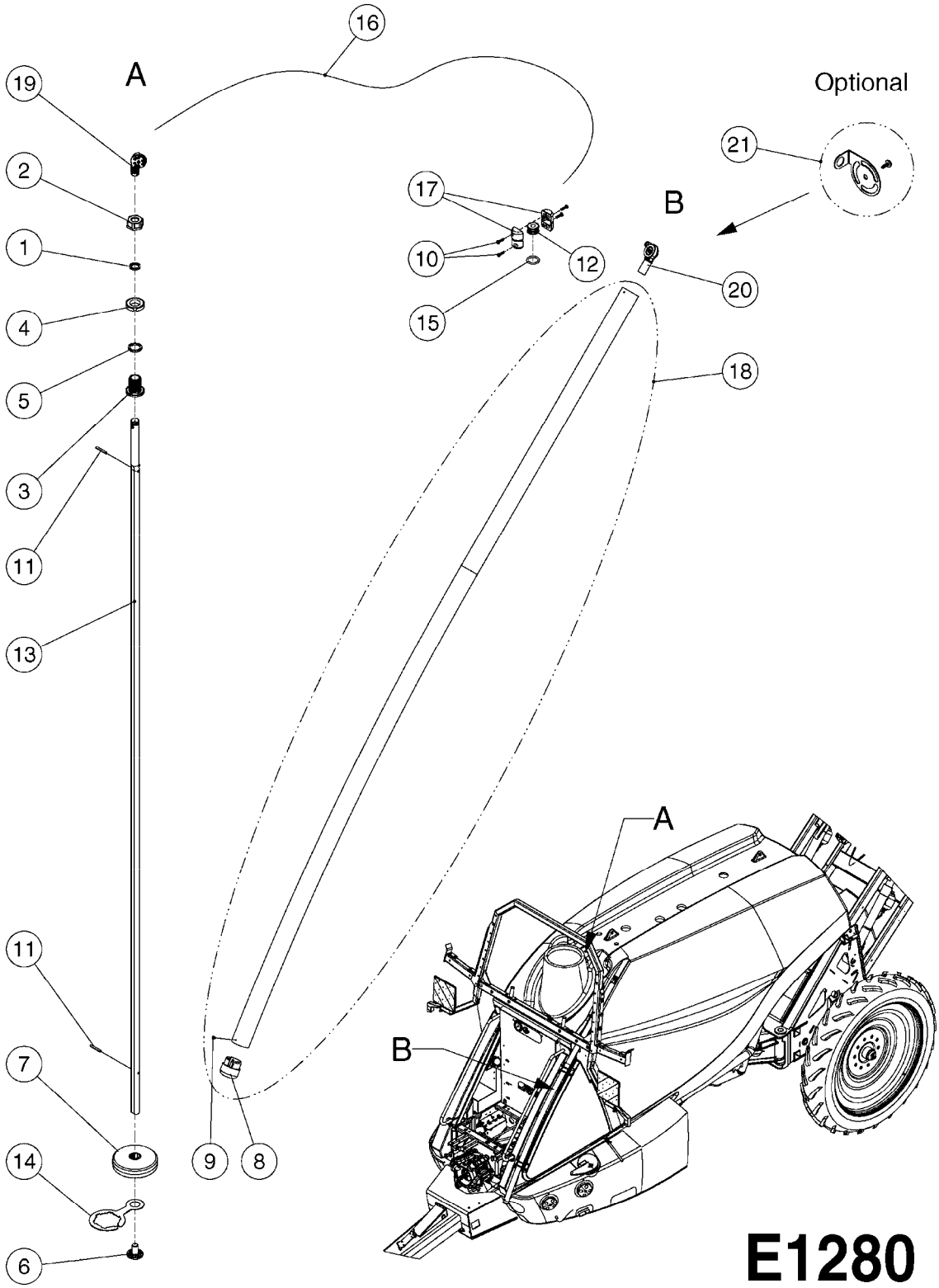

Agroparts: www.HARDI-INTERNATIONAL.com

MECH. TANK GAUGE
CM4500/5500/7000
E1280-HIN, 26:04:17

Date 12.08.2020 11:40

Pos.	parts-nº	order qty	description
1	242309	1	SEAL Ø22 ID Ø30 OD X 4 HIGH
2	320095	1	FITT.DK NUT 1" BSP
3	320467	1	FITT.DK BULKHEAD 1"BSP SINGLE
4	320471	1	FITT.DK NUT 1" BSP JAMB
5	332577	1	O-RING D38/D30X4 F.1" PUR.
6	333864	1	GUIDE F. SAFETY VALVE SPRING
7	334515	1	FLOATER FOR LIQUID LEVEL
8	334850	1	GUIDE F. SIGHT GAUGE TUBE TOP
9	440663	1	SCREW 3/8" NR4 STAINLESS
10	440677	1	SCREW F. PLASTIC 5X20 SS
11	480717	1	PIN E 5X40 SST
12	14117500	1	BUSH FOR SIGHT TUBE INDICATOR
13	15028800	1	ROD F. FLOAT CM6000/7000/SAR5000
13	15068000	1	ROD F.FLOAT CM4500
13	15128500	1	ROD F. FLOAT CM5500
14	16135600	1	GUIDE FOR SIGHT GAUGE NAV/NCM
15	24265100	1	O-RING z28x4 SH70 VITON
16	28034100	1	CABLE F.LIQUID LEVEL IND. SS L=5M
17	39140100	1	SIGHT TUBE INDICATOR RED
18	72768700	1	SCALE TUBE CM 7000
18	72878000	1	SCALE TUBE CM 5500
18	72878100	1	SCALE TUBE CM 4500 PRE'15 TUBE LENGTH = 75"
18	72932100	1	SIGHT GAUGE TUBE W/DECAL CM4400/4500 GAL PRE'15 TUBE LENGTH = 75"
18	72932200	1	SIGHT GAUGE TUBE W/DECAL CM5500 GAL
18	72932300	1	SIGHT GAUGE TUBE W/DECAL CM7000 GAL
18	73125500	1	SIGHT GAUGE W/SCALE,CM4500 '15 LITER POST'15 TUBE LENGTH = 82"
18	73277500	1	SIGHT GAUGE W/SCALE,CM4500 '15 GAL POST'15 TUBE LENGTH = 82"
19	72776300	1	PULLEY FLOAT COMPLETE
20	72776400	1	PULLEY SIGHT GAUGE COMPLETE
21	74193200	1	GUIDE F. PULLEY SIGHT GAUGE

	Agroparts: www.HARDI-INTERNATIONAL.com	
HARDI	AGITATION TUBE E1290-HIN, 16:08:17	Page 0 Date 12.08.2020 11:40

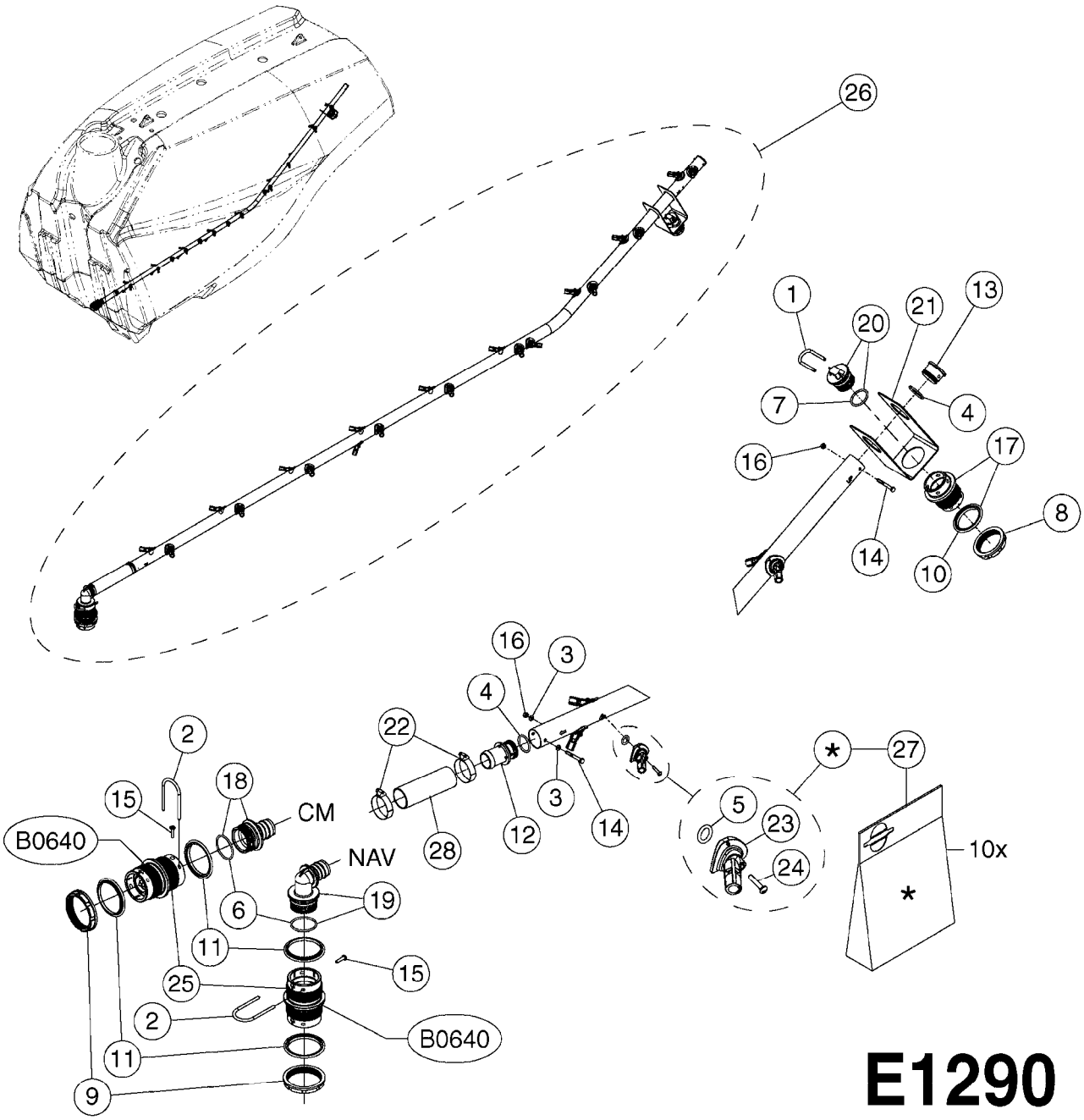

Agroparts: www.HARDI-INTERNATIONAL.com

AGITATION TUBE
E1290-HIN, 16:08:17

Date 12.08.2020 11:40

Pos.	parts-nº	order qty	description
1	145995	1	FITT.DK S-53 FORK
2	145996	1	FITT.DK S-67 FORK
3	241323	1	O-RING D5.3X2.4 NITRIL
4	241441	1	O-RING D29.3X3
5	242132	1	O-RING 21 X 15 X 3
6	242353	1	O-RING 3 X 44.2 VITON
7	242354	1	O-RING D32.2X3.0 VITON
8	322107	1	FITT.DK S-53 BULKHEAD NUT
9	322108	1	FITT.DK S-67 BULKHEAD NUT
10	334260	1	GASKET F. S-53 BULKHEAD
11	334261	1	GASKET F. S-67 BULKHEAD
12	390902	1	SPARGE TUBE FITT FRONT
13	390903	1	CAP SPARGE TUBE
14	411077	1	SCREW M5X45 STAINLESS
15	440677	1	SCREW F. PLASTIC 5X20 SS
16	461217	1	NUT HEX M5 LOCK
17	726463	1	FITT.DK S53 BULKHEAD W/GASKET
18	726561	1	FITT.DK S-67 STR.1-1/4" O-RING
19	726573	1	FITT. S67 5/4" 90° W/O-RING
20	726578	1	FITT.DK S53 PLUG WITH O-RING
21	16008300	1	BRACKET SPARGE TUBE
22	28030103	1	CLAMP HOSE GEAR P5/4-S1.5"6724
23	37218600	1	AGITATION NOZZLE BLUE 1.5MM COM11
23	37218700	1	AGITATION NOZZLE Ø2.0 RØD 11
23	37218800	1	AGITATION NOZZLE BROWN 2.5MM COM11
23	37218900	1	AGITATION NOZZLE Ø3.0 GREY 11
24	45006500	1	BOLT, M4X20 BN5687 TORX, SS
25	72819200	1	CHECK VALVE S67 2012 THREADED
26	72842100	1	SPARGETUBE CM55/7000 COMPLETE
26	72844400	1	SPARGETUBE CM4500 COMPLETE
26	72880900	1	SPARGETUBE NAV4500 COMPLETE
26	72890800	1	SPARGETUBE NAV6200 COMPLETE
27	74193100	1	10 PCS AGITATION NOZZLES BROWN
28	92734403	1	HOSE R X5/4" X200PSI WP X0012"

PRESIDIO VARIABLE TRACK
E1300-HIN, 13:03:18

Date 12.08.2020 11:40

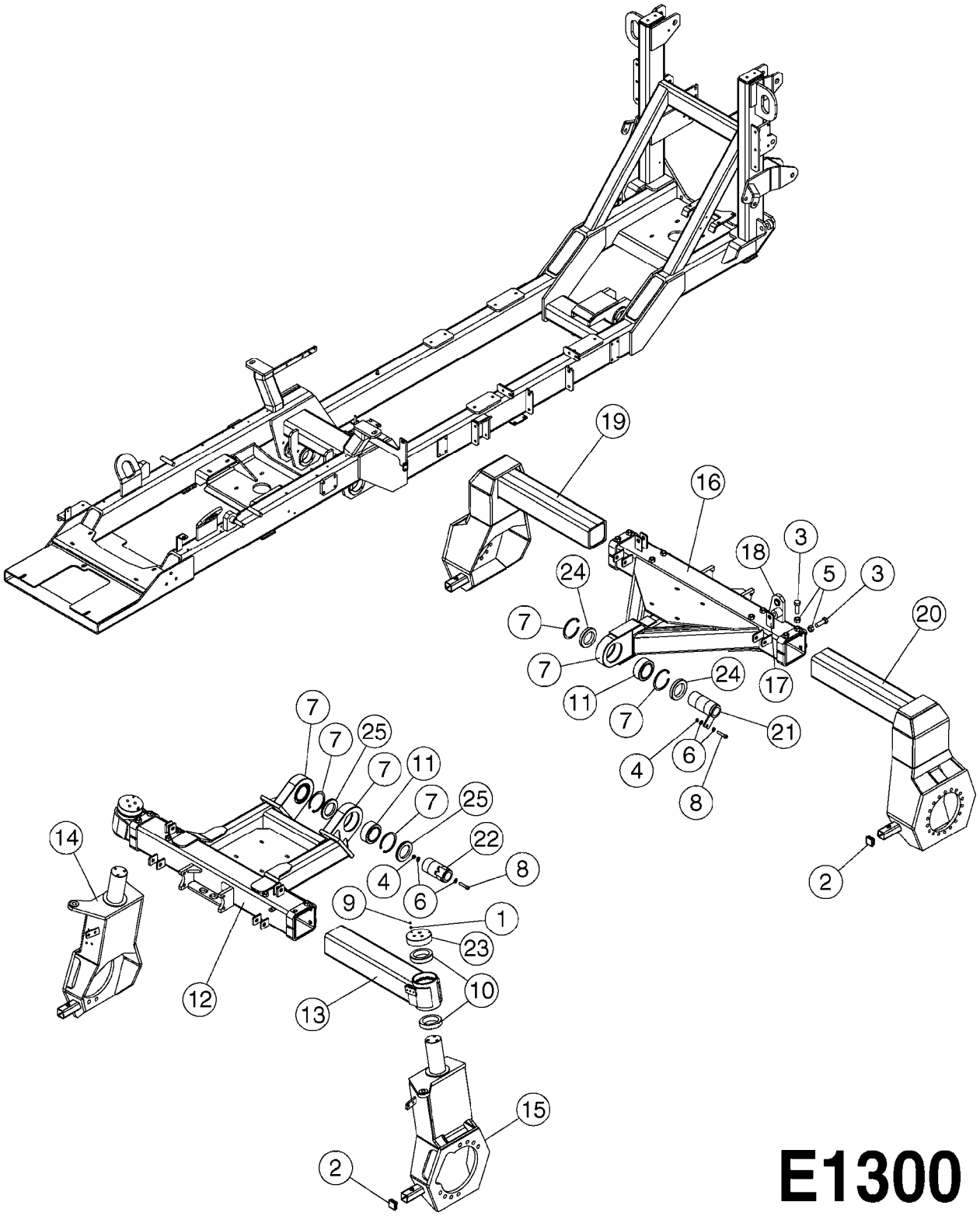

Agroparts: www.HARDI-INTERNATIONAL.com

PRESIDIO VARIABLE TRACK
E1300-HIN, 13:03:18

Date 12.08.2020 11:40

Pos.	parts-n°	order qty	description
1	288538	1	GREASE NIPPLE M8X1.25
2	334561	1	PLUG 50x50x2 F.SQ.TUBE
3	430977	1	BOLT HEX M20X60 DIN931-8.8.DEL
4	460703	1	NUT HEX M12X1.75 LOCK DIN985A2 SS
5	461228	1	NUT HEX M20
6	471127	1	WASHER, M12, Ø24/13X24X2.5 SS
7	PR-DA0038	1	BODY BALL 80 MM WITH RINGS
8	PR-DB1022008050	1	HM Class 8.8 M 8X 50 SCREW
8	PR-DB2142010050	1	SCREW CHC Class 12.9 M10X 50 Zn
9	PR-DD0122	1	GREASE PLUG BLACK
10	PR-DR0003	1	PR3240 PIVOT BEARING (32016)
11	PR-DR0211	1	BEARING DIAMETER 80MM
12	PR-FEPR25311	1	FRONT 200/270 PR2540
12	PR-FEPR25312	1	FRONT 250/305 PR2540
13	PR-FEPR25331	1	HALF CROSS FRONT Ø80 200-305
13	PR-FEPR25332	1	HALF AXLE FRONT 200 - 270
13	PR-FEPR25333	1	HALF CROSS FRONT Ø90 250-305
14	PR-FEPR25350	1	DROP LEG 1.05
14	PR-FEPR25351	1	DROP LEG 1.05
14	PR-FEPR25352	1	DROP LEG 1.05
14	PR-FEPR25353	1	LEG FRONT RIGHT Ø80, 1.50M
14	PR-FEPR25354	1	LEG 1
15	PR-FEPR25360	1	LEG FRONT LEFT Ø80, 1.05M PR2540
15	PR-FEPR25361	1	LEG FRONT RIGHT Ø80, 1.25M PR2540
15	PR-FEPR25362	1	LEG FRONT RIGHT Ø90. 1.40M PR2540
15	PR-FEPR25363	1	LEG FRONT LEFT Ø80, 1.25M
15	PR-FEPR25364	1	LEG 2
16	PR-FEPR25411	1	REAR 200/270 PR2540
16	PR-FEPR25412	1	REAR 250/305 PR2540
17	PR-FEPR2541X-F	1	SHOCK MOUNT - FRONT
18	PR-FEPR2541X-R	1	SHOCK MOUNT - REAR
19	PR-FEPR25451	1	LEG REAR RIGHT 200/270 1.05M
19	PR-FEPR25452	1	LEG REAR RIGHT 180/225 1.25M
19	PR-FEPR25453	1	LEG REAR RIGHT 200/270 1.25M
19	PR-FEPR25454	1	LEG REAR RIGHT 210/280 1.40M
19	PR-FEPR25456	1	LEG REAR RIGHT 250/305 1.40M
20	PR-FEPR25461	1	LEG LEFT REAR 200/270 1.05M
20	PR-FEPR25462	1	LEG LEFT REAR 180/225 1.25M
20	PR-FEPR25463	1	LEG LEFT REAR 200/270 1.25M
20	PR-FEPR25464	1	LEG 3
20	PR-FEPR25466	1	LEG LEFT REAR 250/305 1.40M
21	PR-FEPR32009	1	REAR TRAIN LINE L=185MM PR3240
22	PR-FEPR32010	1	FRONT TRAIN LINE L=165MM PR3240
23	PR-FT0037	1	PIVOT PIN CAP Ø80 UTL PR
24	PR-FTPR32023	1	REAR SEAL PR3240
25	PR-FTPR32054	1	FRONT SEAL PR3240 PR4240

	Agroparts: www.HARDI-INTERNATIONAL.com	
HARDI	TANK - RUBICON 9000 E1310-HIN, 24:05:18	Page 0 Date 12.08.2020 11:40

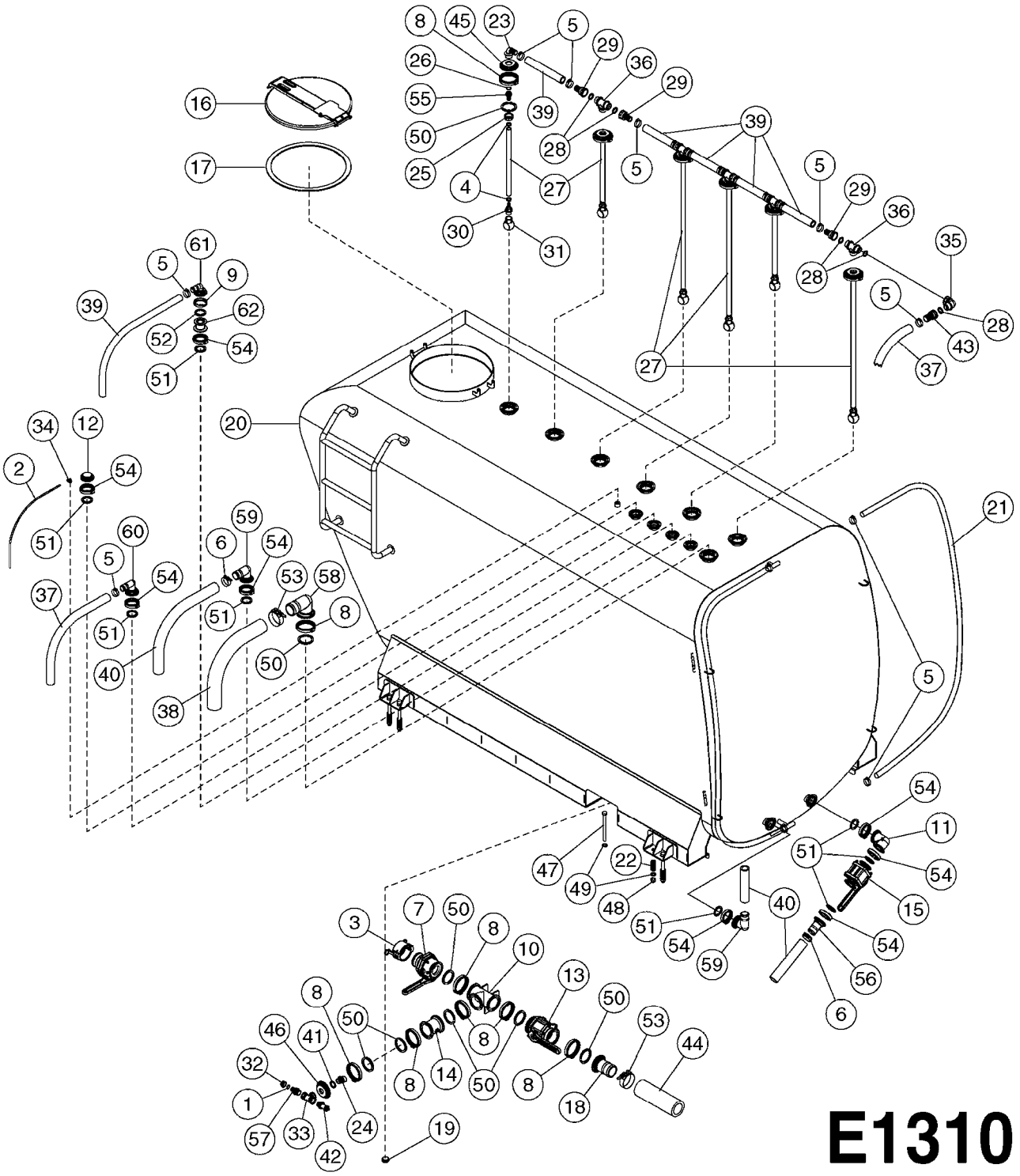

Agroparts: www.HARDI-INTERNATIONAL.com

TANK - RUBICON 9000
E1310-HIN, 24:05:18

Date 12.08.2020 11:40

Pos.	parts-n°	order qty	description
1	330595	1	O-RING D24.6/D20X2.1 -3/4"
2	927306	1	HOSE R X PE D8/D6 X 0012"BLACK
3	28029703	1	CAP F.MALE QUICK COUPLER 3"
4	23008003	1	FITT, 1/4" M BSPP X 4MM
5	28030103	1	CLAMP HOSE GEAR P5/4-S1.5"6724
6	28030203	1	CLAMP HOSE T-BOLT S2" 235-67
7	28034103	1	BALL VALVE BANJO 3" FLG.xMALE
8	28034203	1	CLAMP F. 3" BANJO FLANGE
9	28034503	1	CLAMP F. 2" STD BANJO FLANGE
10	28052303	1	BANJO FITT 3" TEE
11	28091203	1	COUPLING, BANJO, 2", FLANGE, 90
12	28104103	1	PLUG, MANIFOLD FITTING, 2"
13	28104403	1	VALVE, MANIFOLD FLANGED STD 3 INCH BOLTED
14	28104603	1	FITT, FLANGE 3" X 3" STR
15	28104803	1	VALVE, MANIFOLD FLANGED STD 2 INCH BOLTED
16	28105103	1	LID ASSEMBLY 20" RUBICON TANK
17	28105203	1	BUNA GASKET F.RUBICON LID
18	28105403	1	FITT, 3 IN FLANGE BARB
19	28107003	1	FITT, 1 1/4" NPT PLUG, BLK PP
19	28107103	1	FITT, 1 1/2" NPT PLUG, BLK PP ONLY USED ON EARLY 2018 MODEL
20	63058003	1	SS TANK, RUBICON
21	92703503	1	HOSE VINYL CLEAR 1-1/4" OD X 1" ID
22	MA014315000	1	COMPRESSION SPRING
23	MA234415000	1	FITT.ELBOW MALE 1-1/4" Ø32
24	MA234438000	1	FITT.ELBOW MALE 1-1/4" Ø30
25	MA237220000	1	PLASTIC NUT 1-1/4"
26	MA237226000	1	O-RING 26.64X2.62 NITRIL
27	MA237311000	1	TRESS NOBEL HOSE Ø28×Ø19
28	MA237345000	1	GASKET 1-1/4"
29	MA237747000	1	FITT.STR.FEMALE 1-1/4" Ø32
30	MA237811000	1	FITTING STRAIGHT 1" Ø19
31	MA238247000	1	ROTATING RINSE NOZZLE
32	MA238587000	1	FITT.CAP NUT 3/4"
33	MA238664000	1	FITT.TEE FEMALE 1"
34	MA238803000	1	ELBOW PIPE FITTING 90° D8 1/4"
35	MA238836000	1	FITT.ELBOW M-F 1-1/4"
36	MA238837000	1	FITT.TEE MALE 1-1/4"
37	MA240469000	1	HOSE Ø38X51 R4 D.38X50 / REV.:A
38	MA240470000	1	HOSE Ø76x89 R4 D.76x89
39	MA240475000	1	HOSE Ø30X40 R4 D.30X40 / REV.:A
40	MA240549000	1	HOSE Ø50X65 OSM II / REV.:A
41	MA241084000	1	GASKET 1-1/4" 45 X 33 X 3
42	MA243402000	1	SENSOR FOR ELECTRONIC GAUGE
43	MA244491000	1	FITT.STR.FEMALE 1-1/4" Ø40
44	MA247059000	1	TRANSPARENT HOSE Ø76
45	MA251288000	1	PLUG, MANIFOLD, 3" W/HOLE Ø42
46	MA251290000	1	PLUG, MANIFOLD, 3" W/HOLE Ø34
47	MA701001369	1	BOLT HEX M18X200 8.8 DIN931
48	MA702008032	1	LOCKING NUT M18 DIN985 SS
49	MA703001076	1	WASHER PLATE M18
50	MA705010001	1	GASKET F. 3" BANJO FLANGE VITON
51	MA705010002	1	GASKET F. 2" FP BANJO FLANGE VITON
52	MA705010003	1	GASKET F. 2" BANJO FLANGE VITON
53	MA715006030	1	HOSE CLAMP Ø85-95 SS W5
54	MA715011002	1	CLAMP F.2" FP BANJO FLANGE
55	MA718014001	1	FITT.STR.O-RING 1-1/4" Ø32
56	MA718014024	1	2" FP MANIFOLD HOSE BARB
57	MA718016001	1	FITT.REDUCER G1" X G3/4"
58	MA718022005	1	FITT.3" FLANGE 90° ELBOW 3"
59	MA718022008	1	FITT.2" FP FLANGE X 2" 90° ELBOW

Pos.	parts-n°	order qty	description
60	MA718022012	1	FITT.2" FLANGE 90° ELBOW 1-1/2"
61	MA718022015	1	FITT.2" FLANGE 90° ELBOW 1-1/4"
62	MA718023002	1	FITT.2" FLANGE REDUCER COUPLING

WHEELS FOR RUBICON
E1320-HIN, 09:07:18

Date 12.08.2020 11:40

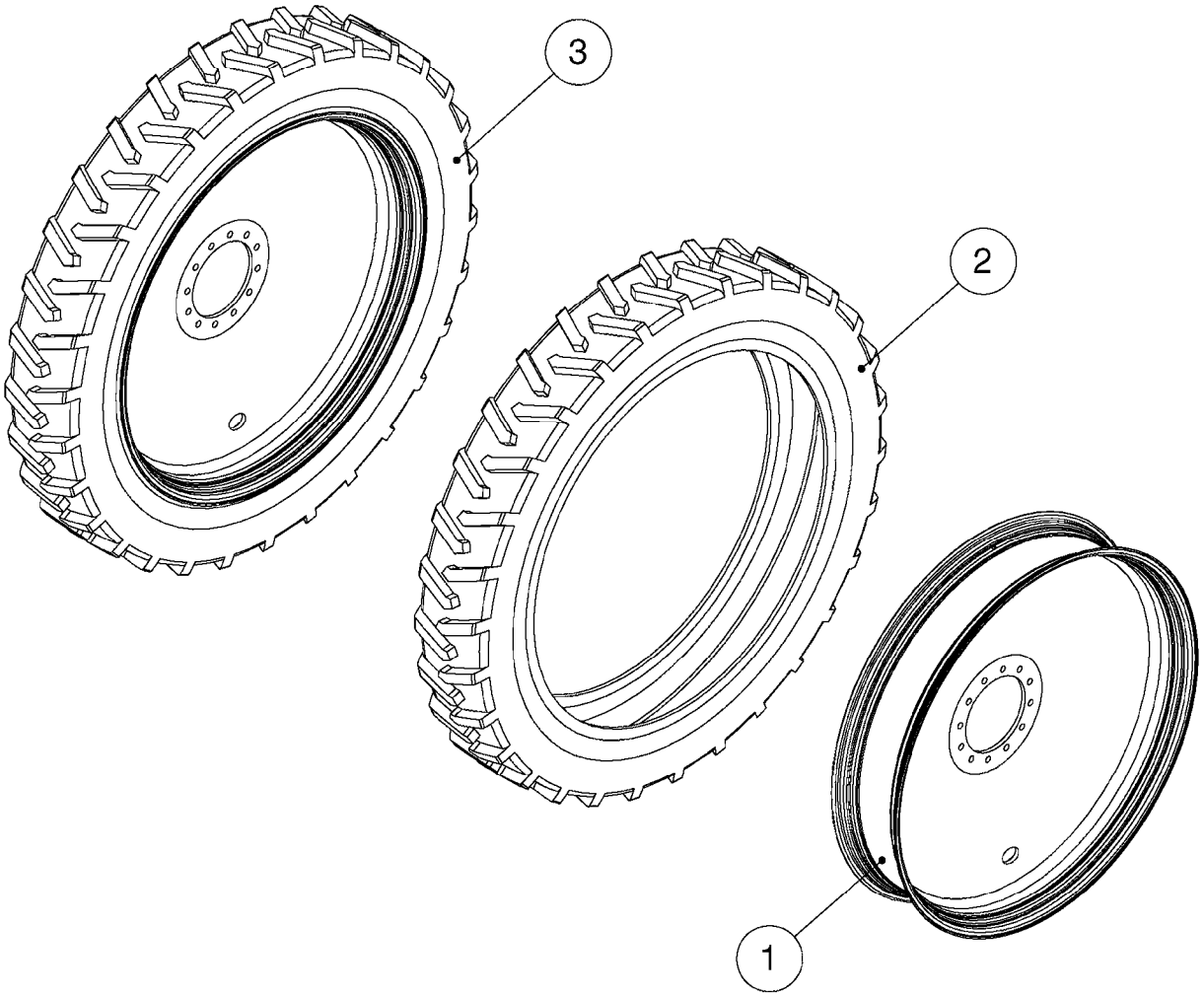

E1320

Agroparts: www.HARDI-INTERNATIONAL.com

WHEELS FOR RUBICON
E1320-HIN, 09:07:18

Date 12.08.2020 11:40

Pos.	parts-nº	order qty	description
1	28101603	1	WHEEL, 54X16", 12B/15.75BC/13.79P
2	28104003	1	TIRE LSW480/70R54 181D
3	70153803	1	WHEEL/TIRE 69.85MM INSET 480/70R54 LH
3	70153903	1	WHEEL/TIRE 69.85MM INSET 480/70R54 RH

PLATFORM/FUEL TANK - RUBICON
E1330-HIN, 14:08:18

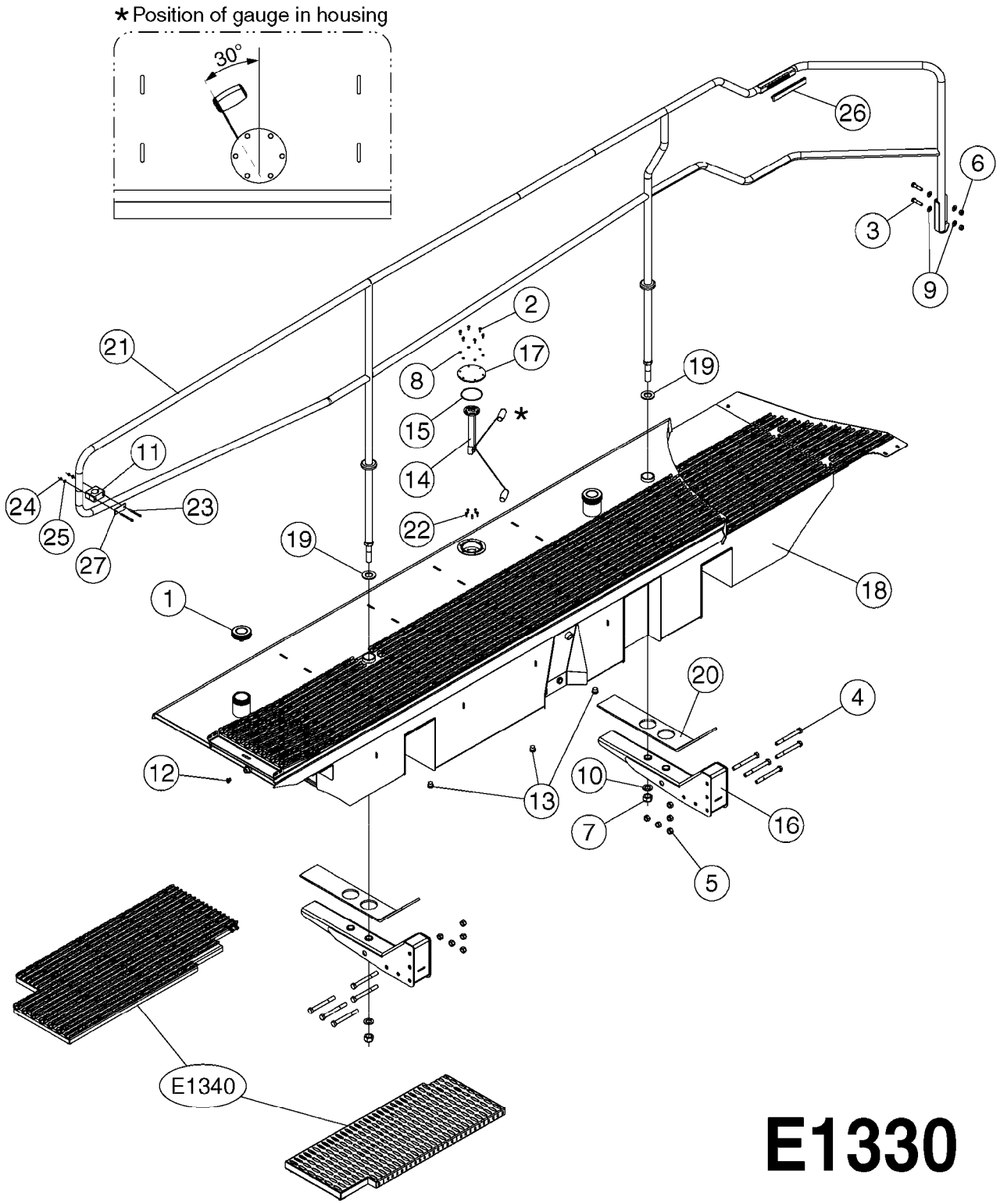

Agroparts: www.HARDI-INTERNATIONAL.com

PLATFORM/FUEL TANK - RUBICON
E1330-HIN, 14:08:18

Date 12.08.2020 11:40

Pos.	parts-nº	order qty	description
1	278924	1	FUEL TANK PLASTIC CAP
2	410185	1	BOLT HEX 8.8 DEL M6X16
3	430939	1	BOLT M12X50 STAINLESS
4	438052	1	BOLT HEX 8.8 DEL M16X150
5	460585	1	LOCKING NUT M16 DIN985 A2 SS
6	460703	1	NUT HEX M12X1.75 LOCK DIN985A2 SS
7	460747	1	NUT HEX M24 LOCK
8	471125	1	WASHER M6U 6.4X14X1.2,A2 SS
9	471127	1	WASHER, M12, Ø24/13X24X2.5 SS
10	471130	1	WASHER, M24, Ø44/25.0X 4.0, SS
11	MA161369000	1	MOUNTING CLAMP Ø40
12	MA161606000	1	MALE PLUG FUEL BSPP 1/4"
13	MA233630000	1	PLUG G1/2
14	MA234310000	1	FUEL LEVEL SENDER
15	MA237114000	1	O-RING Ø94X3
16	MA242655000	1	RUBICON - FUEL TANK BRACKET
17	MA242658000	1	RUBICON GAUGE COVER
18	MA242666000	1	RUBICON FUEL TANK
19	MA245864000	1	WASHER 5MM Ø62/Ø34 /NYLON
20	MA245865000	1	RUBBER 728 X115 X 8.5MM
21	MA245973000	1	HANDRAIL - LEFT HAND - RUBICON
22	MA701003028	1	BOLT CHC M5X16 ALLEN A2 912
23	MA701003278	1	BOLT CHC M6X80 ALLEN A2 DIN 912
24	MA702008002	1	LOCKNUT M6 A2 985
25	MA703001048	1	WASHER M6 SS
26	MA705016073	1	RUBBER PROFILE L=150
26	MA705016075	1	RUBBER PROFILE L=210
27	MA715010004	1	MOUNTING CLAMP PLATE Ø40

HARDI	**Agroparts: www.HARDI-INTERNATIONAL.com**	
	PLATFORM, REAR - RUBICON E1340-HIN, 14:08:18	Page 0 Date 12.08.2020 11:40

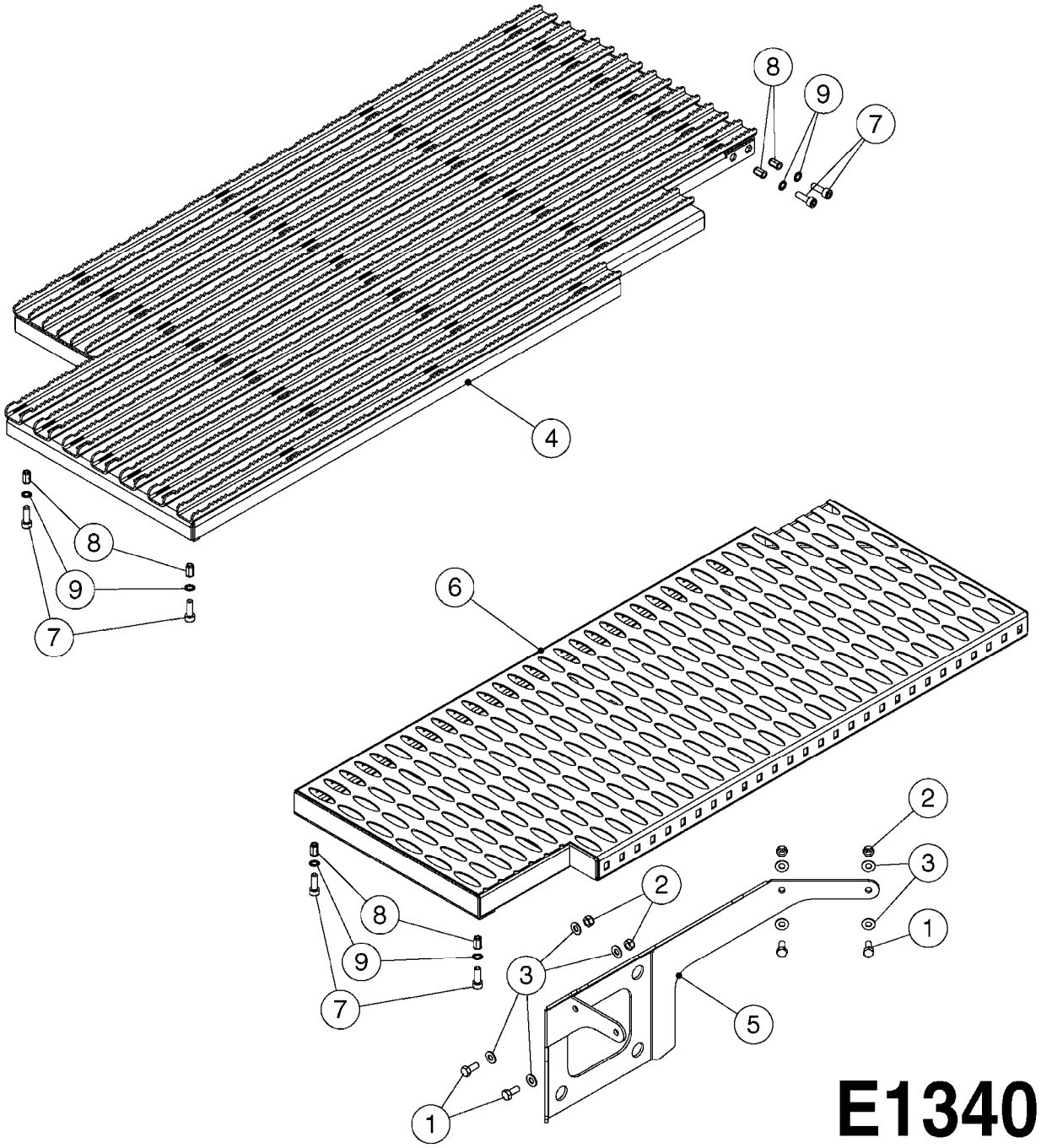

Agroparts: www.HARDI-INTERNATIONAL.com

PLATFORM, REAR - RUBICON
E1340-HIN, 14:08:18

Date 12.08.2020 11:40

Pos.	parts-nº	order qty	description
1	420582	1	BOLT HEX 8.8 DEL M8X20 FT A2
2	460143	1	LOCK NUT M8 SST A2 DIN985
3	471126	1	WASHER, M8, Ø16/ 8.4X 1.6, SS
4	MA245896000	1	LEFT REAR PLATFORM / REV:A
5	MA253005000	1	PLATFORM BRACKET
6	MA253226000	1	RIGHT REAR PLATFORM / REV:A
7	MA701003094	1	BOLT CHC M8X25 ALLEN A2 DIN 933
8	MA702017013	1	BLIND RIVET NUT M8
9	MA703003010	1	WASHER INT JZ08 A2 27625

	Agroparts: www.HARDI-INTERNATIONAL.com	
HARDI	REAR TRAFFIC LIGHTS - RUBICON E1350-HIN, 13:08:18	Page 0 Date 12.08.2020 11:40

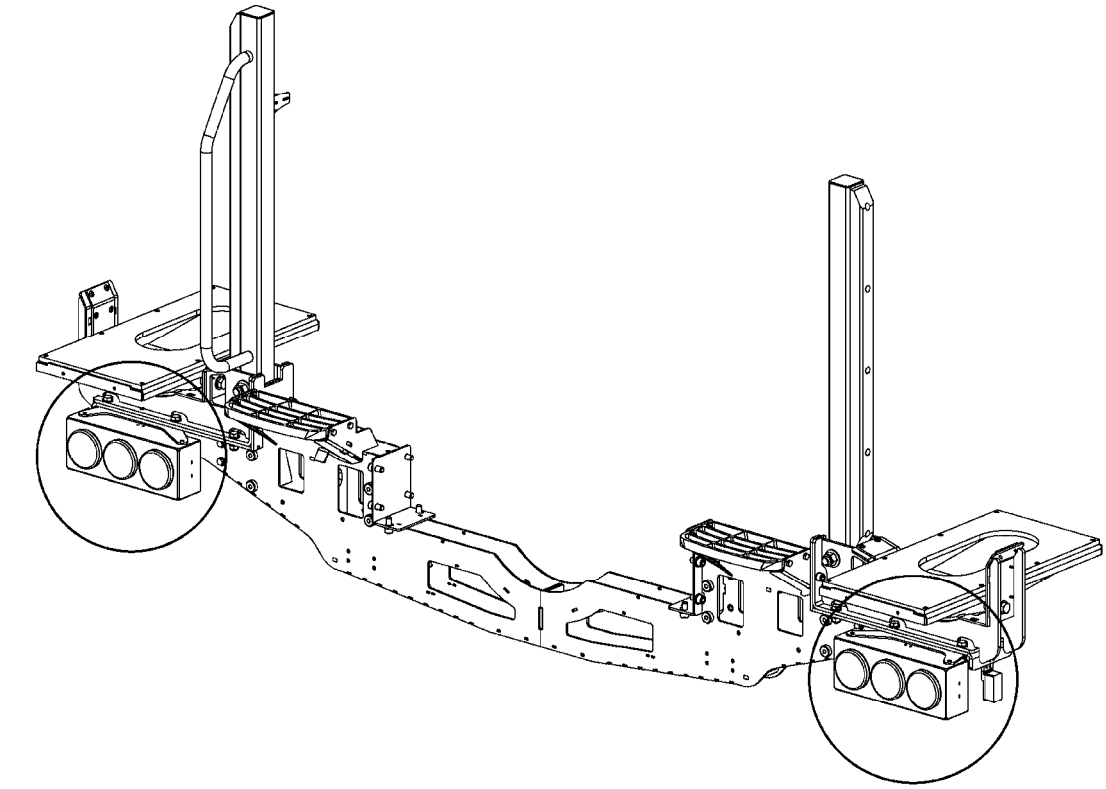

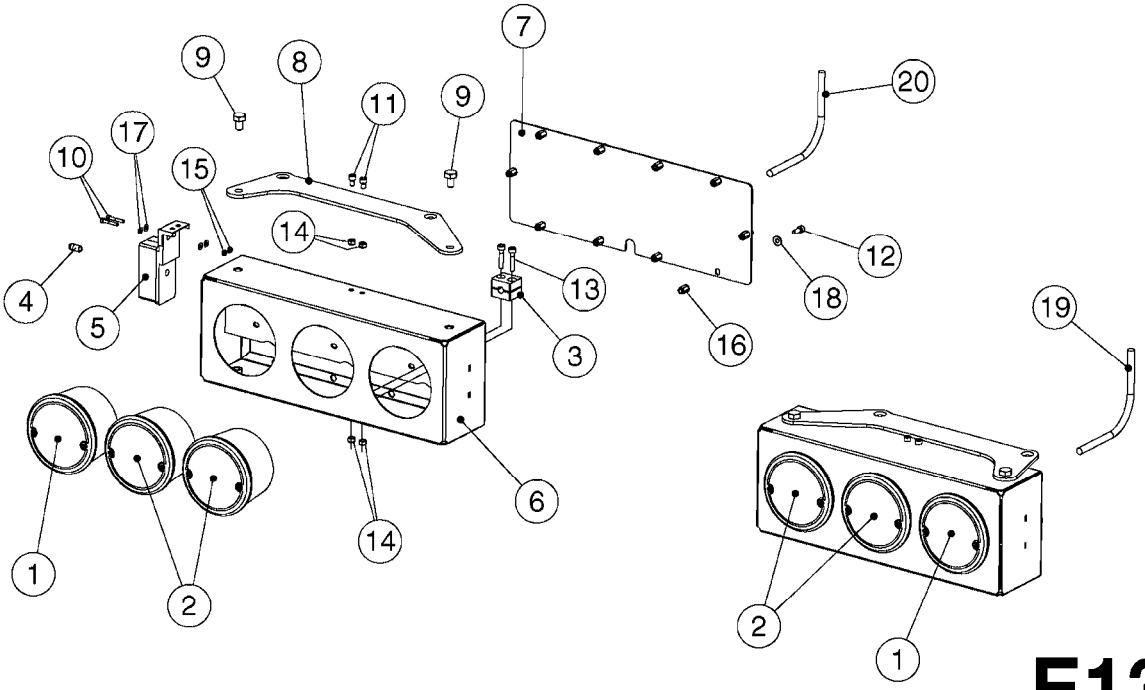

E1350

Agroparts: www.HARDI-INTERNATIONAL.com

REAR TRAFFIC LIGHTS - RUBICON
E1350-HIN, 13:08:18

Date 12.08.2020 11:40

Pos.	parts-n°	order qty	description
1	26011901	1	REAR TURN SIGNAL, ORANGE LED
2	26012001	1	REAR LIGHT STOP/POSITION RED LED
3	MA161256000	1	CLAMP 10
4	MA234072000	1	LIGHT BULB 12V
5	MA234674000	1	SIDE MARKER LIGHT
6	MA243853000	1	TAIL LIGHT HOUSING
7	MA243854000	1	TAIL LIGHT LID
8	MA243855000	1	TAIL LIGHT SUPPORT
9	MA701001345	1	HEX BOLT M10X16 A2 933
10	MA701003024	1	BOLT CHC M4X25 ALLEN A2 912
11	MA701003052	1	BOLT M6X10 ALLEN A2 912
12	MA701003058	1	BOLT M6X16 ALLEN A2 912
13	MA701003069	1	BOLT CHC M6X30 ALLEN A2 912
14	MA702008002	1	LOCKNUT M6 A2 985
15	MA702008051	1	LOCKNUT M4 A2 985
16	MA702017014	1	RIVET NUT M6
17	MA703001042	1	WASHER M4 STEEL A2
18	MA703001048	1	WASHER M6 SS
19	MA750008065	1	TAIL LIGHT HARNESS LH
20	MA750008066	1	TAIL LIGHT HARNESS RH

	Agroparts: www.HARDI-INTERNATIONAL.com	
HARDI	BOOM SUPPORT - RUBICON E1360-HIN, 15:08:18	Page 0 Date 12.08.2020 11:40

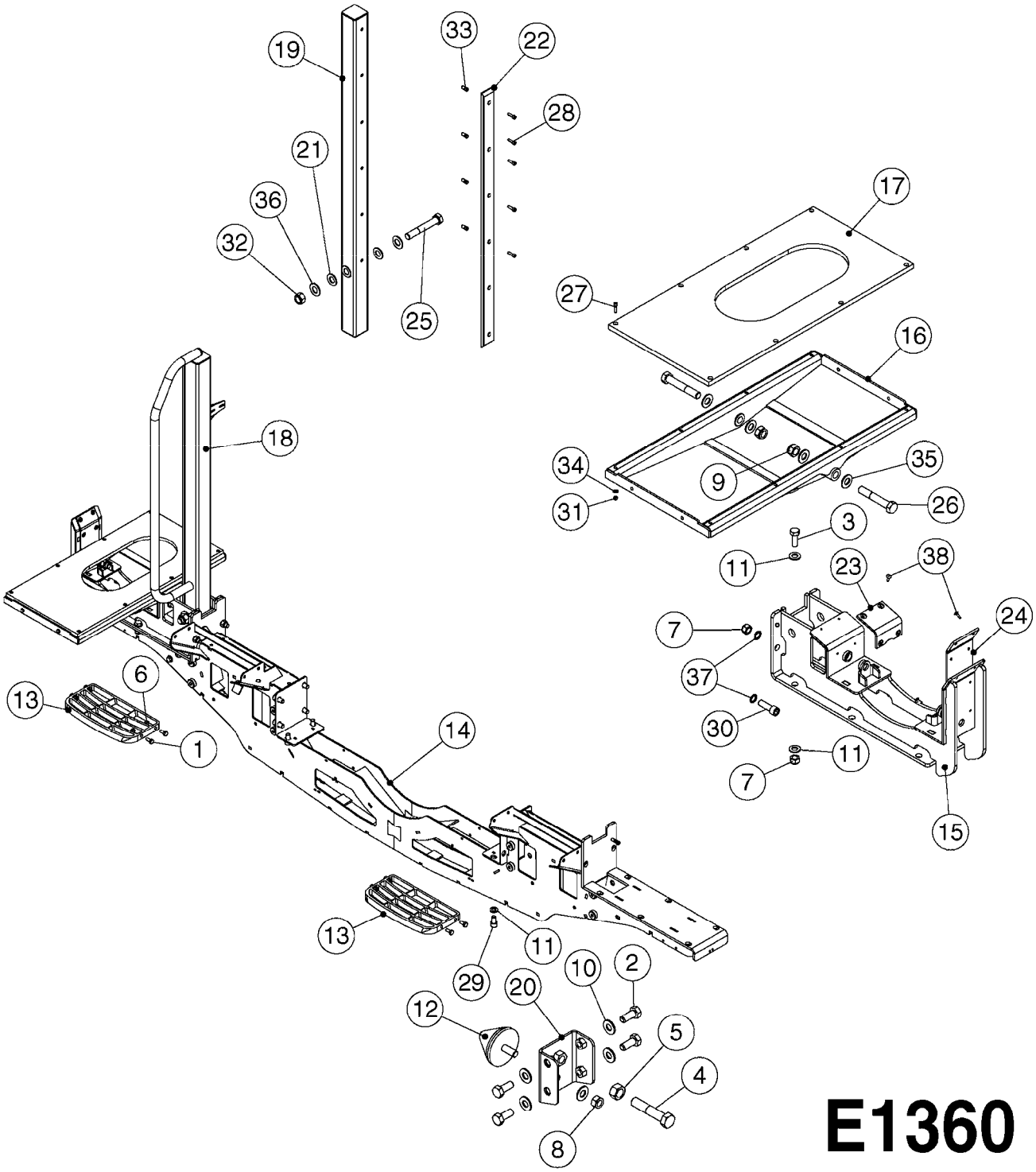

E1360

Agroparts: www.HARDI-INTERNATIONAL.com

BOOM SUPPORT - RUBICON
E1360-HIN, 15:08:18

Date 12.08.2020 11:40

Pos.	parts-n°	order qty	description
1	420604	1	BOLT HEX 8.8 DEL M10X25 FT DIN933
2	430286	1	BOLT HEX 8.8 DEL M12X30 FT
3	430507	1	BOLT HEX 8.8 DEL M16X45 FT
4	430934	1	BOLT HEX 8.8 DEL M16X80
5	460327	1	NUT HEX M16X2
6	460423	1	NUT HEX M10X1.50 LOCK DIN985A2 SS
7	460585	1	LOCKING NUT M16 DIN985 A2 SS
8	460703	1	NUT HEX M12X1.75 LOCK DIN985A2 SS
9	460806	1	NUT HEX M20X2.50 LOCK DIN985A2 SS
10	471127	1	WASHER, M12, Ø24/13X24X2.5 SS
11	471128	1	WASHER, M16, Ø30/17.0X 3.0, SS
12	MA046517000	1	RUBBER STOP
13	MA245892000	1	ALUMINUM LADDER STEP
14	MA246484000	1	RUBICON - BOOMS BRACKET BEAM
15	MA246812000	1	RUBICON - BOOM BRACKET
16	MA246813000	1	RUBICON - TRANSPORT CRADLE
17	MA246828000	1	BOOM BRACKET PAD
18	MA246832000	1	RUBICON - LEFT STOP BAR
19	MA246833000	1	RUBICON - RIGHT STOP BAR
20	MA246834000	1	RUBICON - STOP BRACKET
21	MA246835000	1	BUSHING WASHER
22	MA246837000	1	RUBICON - BOOM BRACKET GUARD
23	MA249043000	1	BOOM SUPPORT SLIDE
24	MA249044000	1	BOOM SUPPORT SLIDE
25	MA701001443	1	BOLT HEX 1"X6-1/2" 10.9 UNC
26	MA701001551	1	BOLT HEX M20X120 A2 931
27	MA701003065	1	BOLT CHC M6X25 ALLEN A2 912
28	MA701003097	1	BOLT CHC M8X30 ALLEN A2 DIN 933
29	MA701003146	1	BOLT CHC M16X30 12.9 912
30	MA701003148	1	BOLT CHC M16X50 ALLEN 8.8 912
31	MA702008002	1	LOCKNUT M6 A2 985
32	MA702008048	1	LOCKNUT 1" SS
33	MA702017011	1	RIVET NUT M8
34	MA703001048	1	WASHER M6 SS
35	MA703001079	1	WASHER M20 SS
36	MA703001126	1	WASHER
37	MA703003017	1	WASHER INT JZ16 AC 27625
38	MA707006019	1	RIVET 4.8X18X14 ALU/STEEL 7337

PLATFORM LADDER LEFT - RUBICON
E1370-HIN, 20:08:18

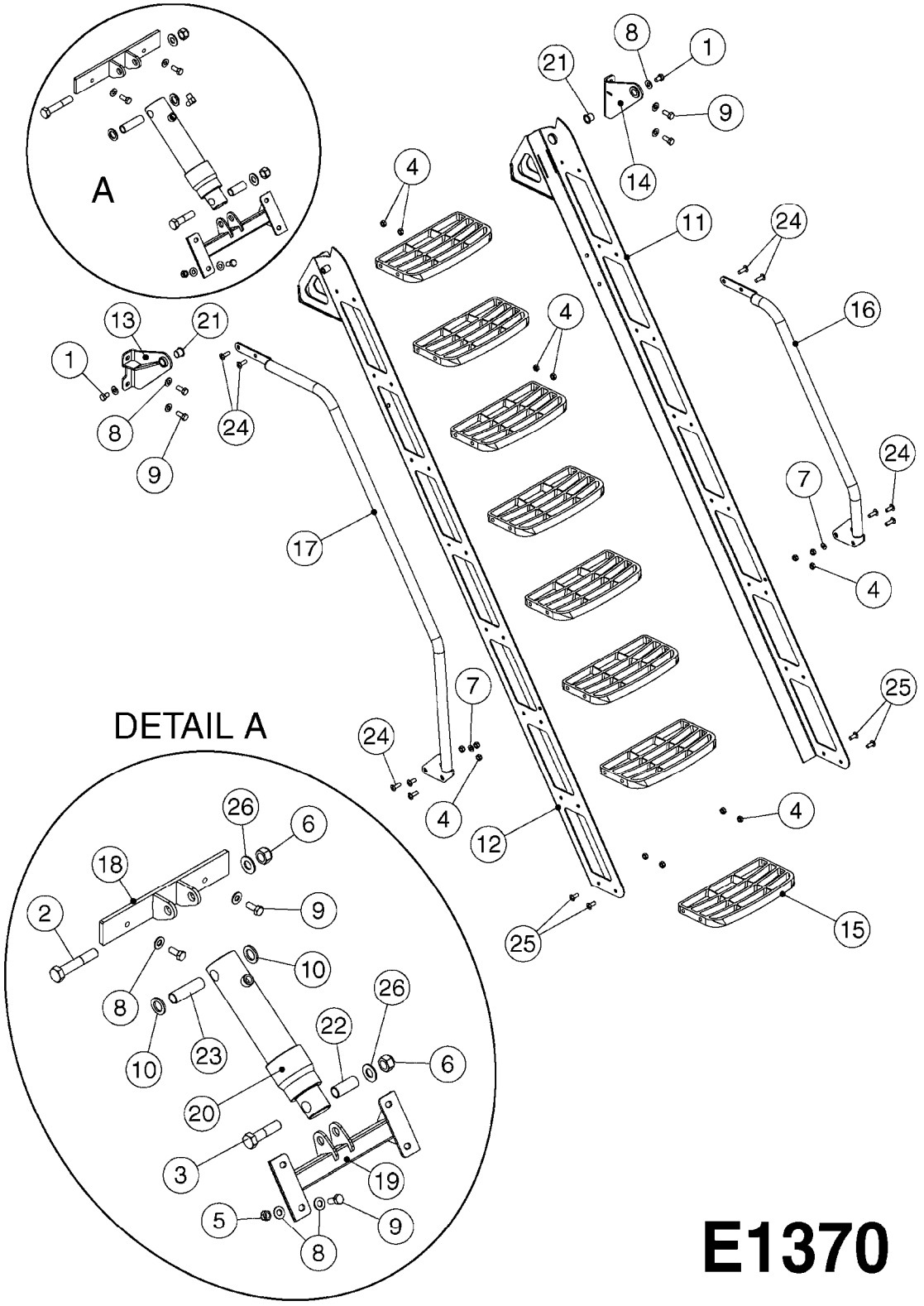

Agroparts: www.HARDI-INTERNATIONAL.com

PLATFORM LADDER LEFT - RUBICON
E1370-HIN, 20:08:18

Date 12.08.2020 11:40

Pos.	parts-nº	order qty	description
1	430662	1	BOLT HEX 8.8 DEL M12X20 FT
2	430888	1	BOLT HEX 8.8 DEL M20X130
3	430918	1	M20X100 DIN 931-8.8 DEL
4	460423	1	NUT HEX M10X1.50 LOCK DIN985A2 SS
5	460703	1	NUT HEX M12X1.75 LOCK DIN985A2 SS
6	460806	1	NUT HEX M20X2.50 LOCK DIN985A2 SS
7	471122	1	WASHER, M10, Ø20/10.5X 2.0, SS
8	471127	1	WASHER, M12, Ø24/13X24X2.5 SS
9	43099200	1	BOLT HEX SS M12 X 30 DIN933 A4
10	MA048358000	1	WASHER 40X25.2X4 HDPE
11	MA245880000	1	RUBICON - WELDED LADDER RISER, RIGHT
12	MA245881000	1	RUBICON - WELDED LADDER RISER, LEFT
13	MA245882000	1	RUBICON - LEFT LADDER BRACKET
14	MA245883000	1	RUBICON - RIGHT LADDER BRACKET
15	MA245892000	1	ALUMINUM LADDER STEP
16	MA245893000	1	RUBICON - RIGHT RAIL F.LEFT LADDER
17	MA245894000	1	RUBICON - LEFT RAIL F.LEFT LADDER
18	MA249211000	1	CYLINDER ANCHOR F.LADDER
19	MA249212000	1	WELDED CROSSBAR CONNECTION
20	MA501101200	1	CYLINDER
21	MA512004014	1	FLANGED BUSHING TU Ø20X23 LG
22	MA524003008	1	SPACER 20X25X60
23	MA524003009	1	SPACER 20X25X85
24	MA701021010	1	BOLT TBHC M10X30 A2 7380
25	MA701021011	1	BOLT TBHC M10X25 A2 7380
26	MA703001025	1	WASHER M20 STEEL ZB

	Agroparts: www.HARDI-INTERNATIONAL.com	
HARDI	PLATFORM LADDER RIGHT - RUBICON E1380-HIN, 20:08:18	Page 0 Date 12.08.2020 11:40

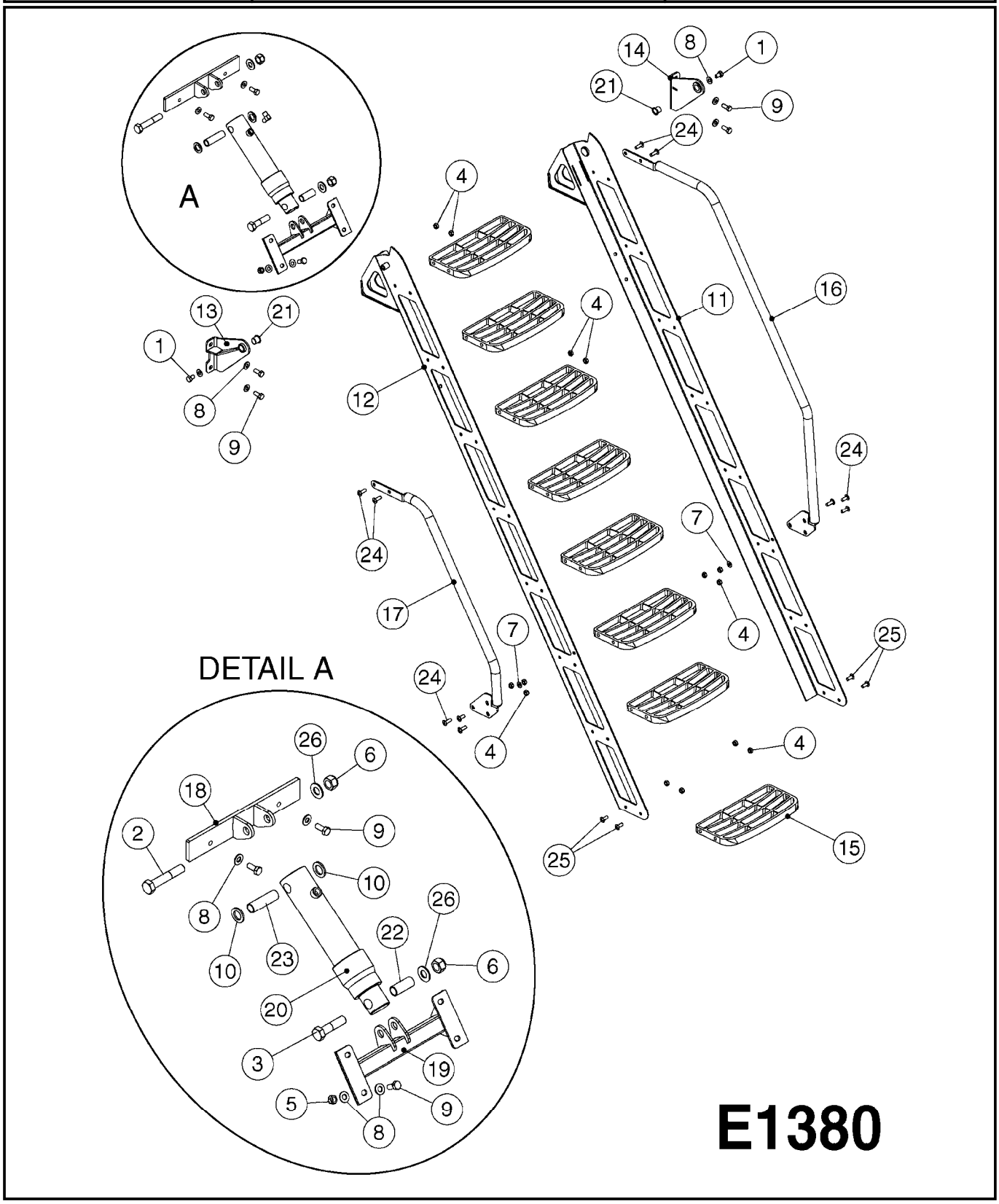

Agroparts: www.HARDI-INTERNATIONAL.com

PLATFORM LADDER RIGHT - RUBICON
E1380-HIN, 20:08:18

Date 12.08.2020 11:40

Pos.	parts-nº	order qty	description
1	430662	1	BOLT HEX 8.8 DEL M12X20 FT
2	430888	1	BOLT HEX 8.8 DEL M20X130
3	430918	1	M20X100 DIN 931-8.8 DEL
4	460423	1	NUT HEX M10X1.50 LOCK DIN985A2 SS
5	460703	1	NUT HEX M12X1.75 LOCK DIN985A2 SS
6	460806	1	NUT HEX M20X2.50 LOCK DIN985A2 SS
7	471122	1	WASHER, M10, Ø20/10.5X 2.0, SS
8	471127	1	WASHER, M12, Ø24/13X24X2.5 SS
9	43099200	1	BOLT HEX SS M12 X 30 DIN933 A4
10	MA048358000	1	WASHER 40X25.2X4 HDPE
11	MA245880000	1	RUBICON - WELDED LADDER RISER, RIGHT
12	MA245881000	1	RUBICON - WELDED LADDER RISER, LEFT
13	MA245882000	1	RUBICON - LEFT LADDER BRACKET
14	MA245883000	1	RUBICON - RIGHT LADDER BRACKET
15	MA245892000	1	ALUMINUM LADDER STEP
16	MA245989000	1	RUBICON - RIGHT RAIL F.RIGHT LADDER
17	MA245990000	1	RUBICON - LEFT RAIL F.RIGHT LADDER
18	MA249211000	1	CYLINDER ANCHOR F.LADDER
19	MA249212000	1	WELDED CROSSBAR CONNECTION
20	MA501101200	1	CYLINDER
21	MA512004014	1	FLANGED BUSHING TU Ø20X23 LG
22	MA524003008	1	SPACER 20X25X60
23	MA524003009	1	SPACER 20X25X85
24	MA701021010	1	BOLT TBHC M10X30 A2 7380
25	MA701021011	1	BOLT TBHC M10X25 A2 7380
26	MA703001025	1	WASHER M20 STEEL ZB

WHEELS FOR CM8500/10000
E1390-HIN, 02:07:19

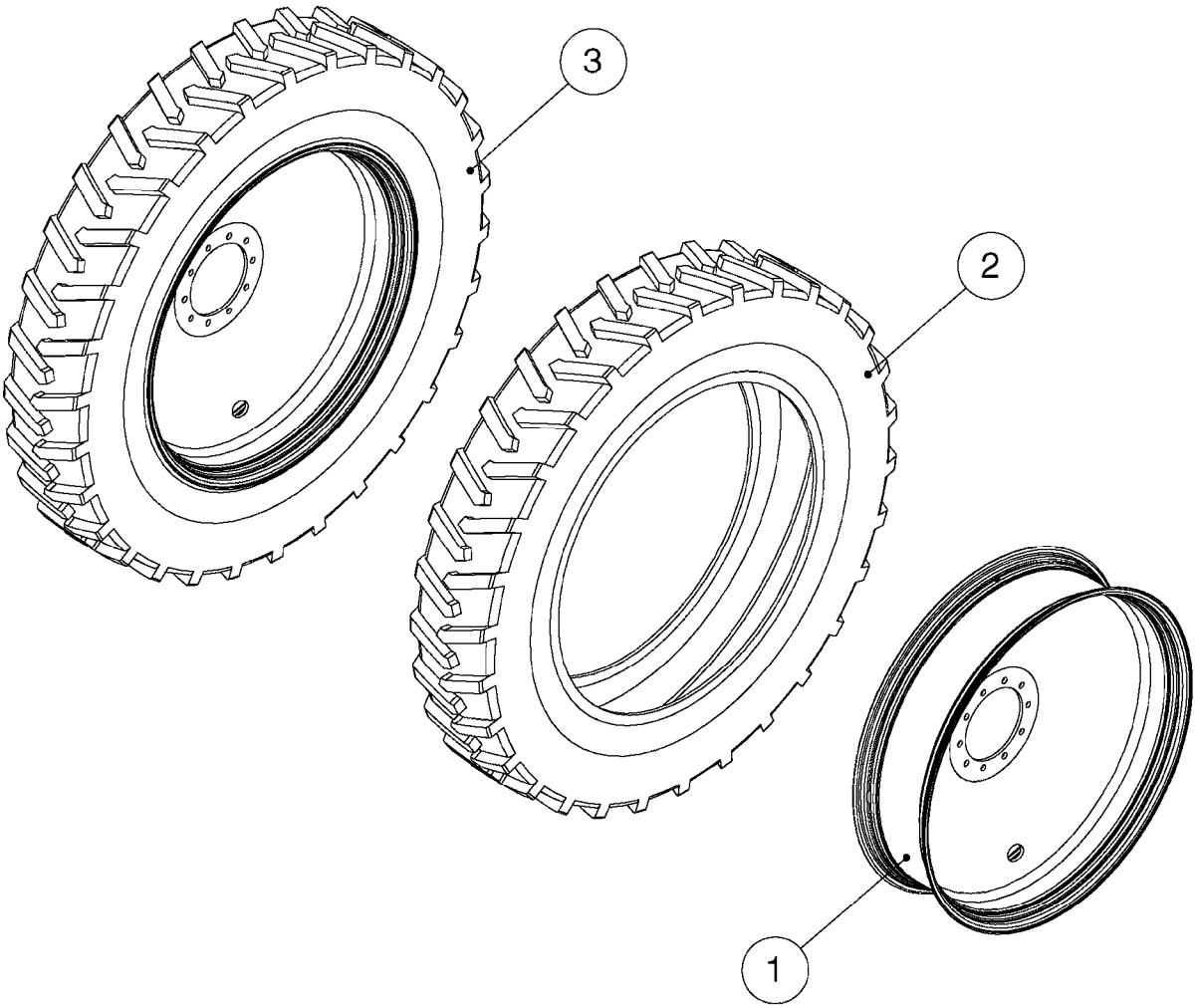

E1390

Agroparts: www.HARDI-INTERNATIONAL.com

WHEELS FOR CM8500/10000
E1390-HIN, 02:07:19

Date 12.08.2020 11:40

Pos.	parts-nº	order qty	description
1	28090503	1	WHEEL 50XDW16B/13.19 BC/11.07 P WHEEL FOR 480/80 R50 TIRE
1	28091503	1	WHEEL 50X13/13.19 BC/11.07 P WHEEL FOR 380/105 R50 TIRE
2	28090703	1	TIRE, 380/105R50 177D ULTRASPRAY TL
2	28090903	1	TIRE, 480/80R50 176A8 SUPER TRAC TL
3	70119203	1	WHEEL/TIRE 380/105R50 LH
3	70119303	1	WHEEL/TIRE 380/105R50 RH
3	70119503	1	WHEEL/TIRE 480/80R50 LH
3	70119603	1	WHEEL/TIRE 480/80R50 RH

	Agroparts: www.HARDI-INTERNATIONAL.com	
HARDI	SARITOR TANK FRAME E1400-HIN, 17:07:19	Page 0 Date 12.08.2020 11:40

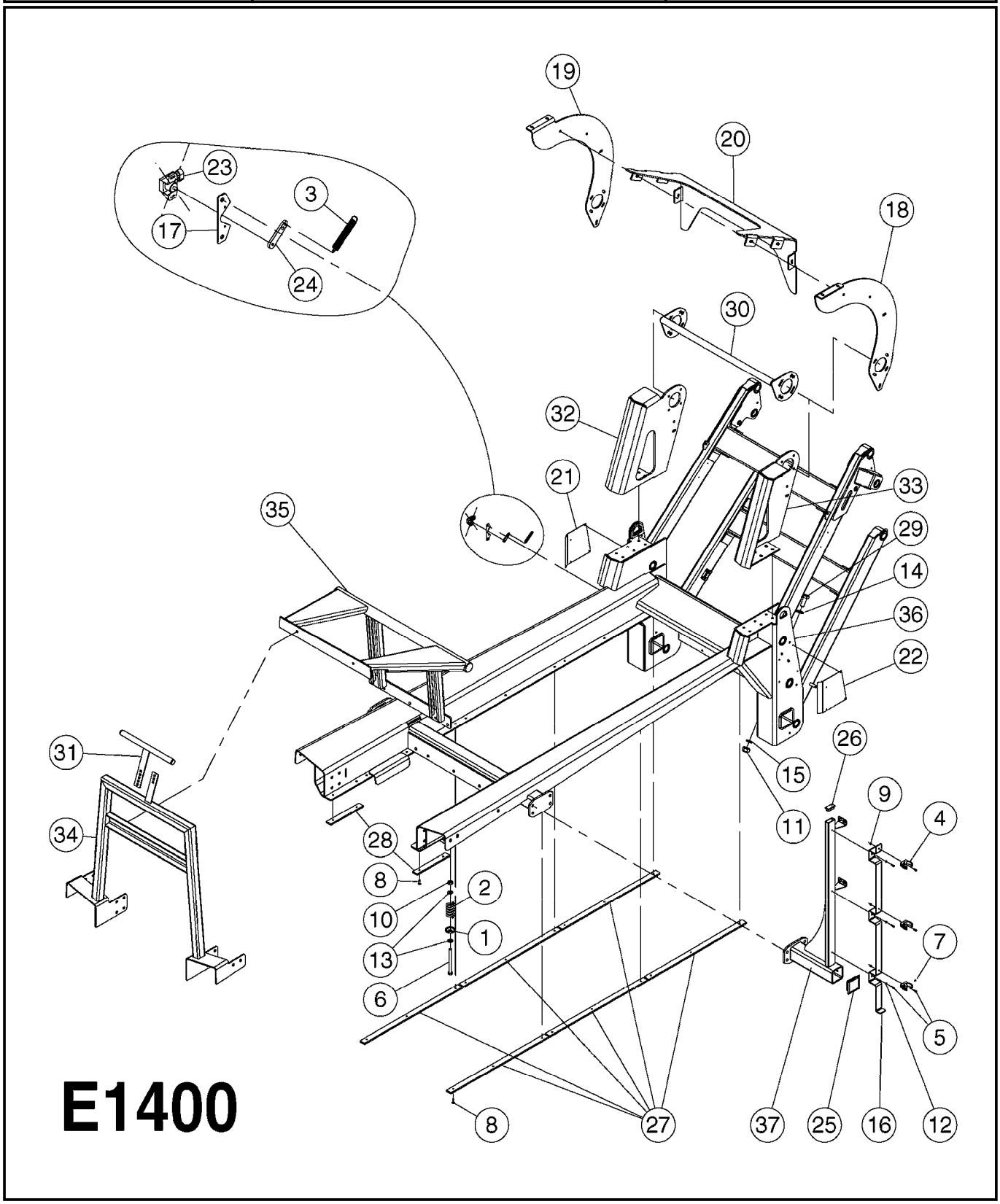

Agroparts: www.HARDI-INTERNATIONAL.com

SARITOR TANK FRAME
E1400-HIN, 17:07:19

Date 12.08.2020 11:40

Pos.	parts-n°	order qty	description
1	166246	1	WASHER CUP D53 F.SPRING
2	220673	1	SPRING F.PIVOT 100 X 51
3	220947	1	SPRING D13.0/1,2 L=90 RST
4	334523	1	PIPE HOLDER Ø51.5
5	410362	1	BOLT HEX 8.8 SS M6X20
6	430946	1	BOLT HEX M16 x 180 8.8 DEL
7	440663	1	SCREW 3/8" NR4 STAINLESS
8	458032	1	BOLT M8X30 8.8 DIN7991D SS
9	460261	1	NUT HEX M6X1.00 LOCK DIN985 A2 SS
10	460585	1	LOCKING NUT M16 DIN985 A2 SS
11	460747	1	NUT HEX M24 LOCK
12	470901	1	WASHER D11.8/D6.1X1.6 SS LOCK
13	478039	1	WASHER M16U 16.5X32XX3 SST
14	478041	1	WASHER D25/D50X4 SS A2
15	478079	1	PAIR OF WASHERS NL24 25.3X39X3.4
16	16220903	1	BKT SIGHT GAUGE SARITOR
17	16610101	1	BRACKET ANGULAR SENSOR PARALIFT SARITOR FROM #55647
18	16633401	1	LATERAL LEFT BRACKET, PARADYME, SARITOR
19	16633501	1	LATERAL RIGHT BRACKET, PARADYME, SARITOR
20	16633601	1	CENTER BRACKET, PARADYME, SARITOR
21	16645801	1	PLATE, PROTEC, TANK FRAME, REAR/R, SARITOR
22	16645901	1	PLATE, PROTEC, TANK FRAME, REAR/L, SARITOR
23	26005700	1	ANGLE SENSOR 70° 0.5-4.5 VDC + LEVER
24	26005800	1	ANGLE SENSOR 120° 0.5-4.5 VDC + LEVER
25	28022101	1	PROT. PLUG EP700 100.100x5-8
26	28032801	1	PROT. PLUG EP600 LR60.30X3
27	39001101	1	TANK REST SHIM - SAR.FRAME
28	39010601	1	TANK REST SHIM L=290 SAR FROM #55700
29	43000501	1	BOLT HEX M24X60 DAC 8.8 DIN933
30	61012101	1	TANK BRACE BAR SARITOR
31	61012401	1	FRONT TANK SUPPORT FOR SARITOR
32	61013601	1	BRACKET, MAIN TANK HOLDER, REAR R, SARITOR
33	61013701	1	BRACKET, MAIN TANK HOLDER, REAR L, SARITOR
34	63033201	1	BRACKET, TANKS, FRONT, SARITOR
35	63033301	1	BRACKET FLUSH TANK SARITOR
36	63033401	1	TANK CARRIER FRAME SAR UNTIL #55093
36	63062701	1	TANK CARRIER FRAME SAR V2 FROM #55094 TO #55646
36	63066901	1	TANK CARRIER FRAME SAR V3 FROM #55647
37	63036101	1	BRACKET SIGHT GAUGE TANK SARITOR

COMMANDER 8500/10000 TANK
E1410-HIN, 17:06:20

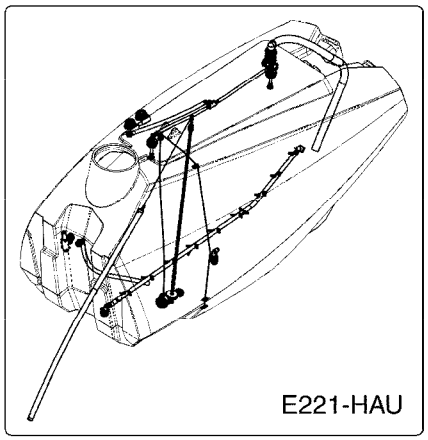

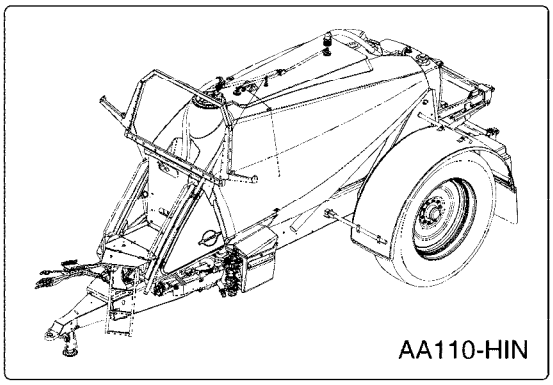

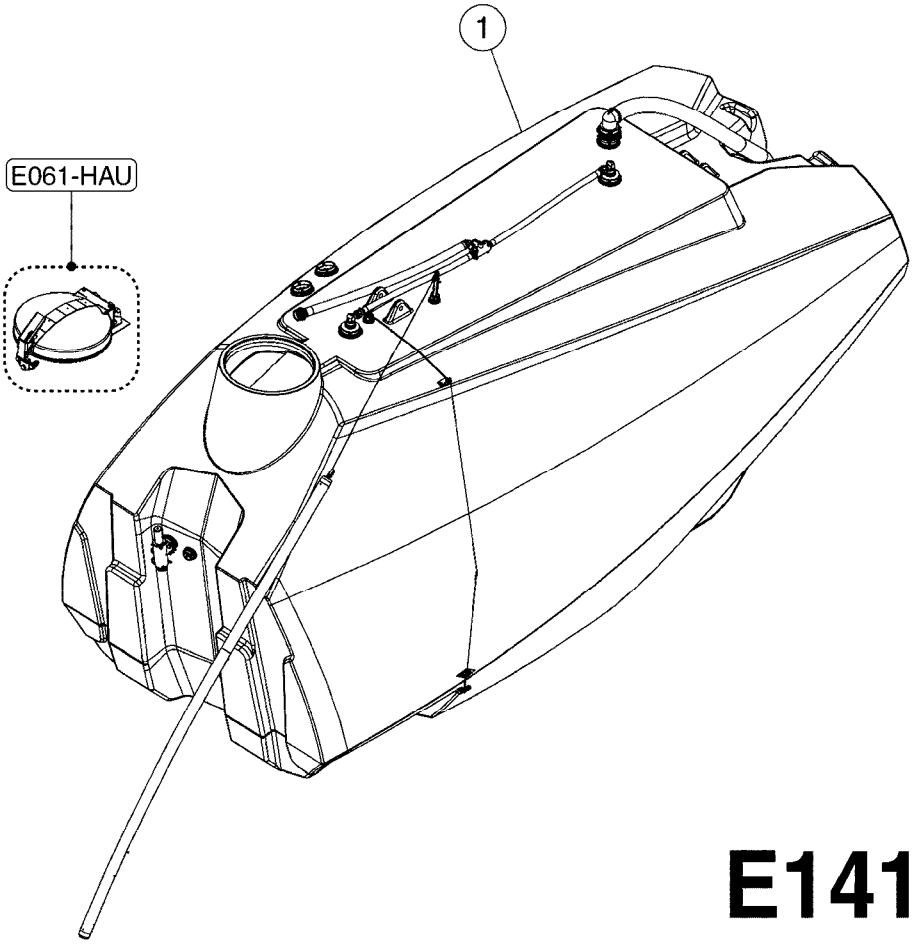

E1410

Agroparts: www.HARDI-INTERNATIONAL.com

COMMANDER 8500/10000 TANK
E1410-HIN, 17:06:20

Date 12.08.2020 11:40

Pos.	parts-nº	order qty	description
1	35003704	1	TANK 10000 COMMANDER
1	35003804	1	TANK 8500 COMMANDER

Section F

Tanks / Frames: Mistblowers

main group	page-n°	date	description
Tank and Frame: Mistblowers			
	F0010-HIN	01:01:16	TANK - LB 50
	F0020-HIN	01:01:16	FRAME LB 50
	F0030-HIN	01:01:16	TANK - LE/LE-SPV/LP 100/150
	F0040-HIN	01:01:16	FRAME - LE/LE-SPV/LP 100/150
	F0050-HIN	01:01:16	TANK - ARROW 270/400
	F0060-HIN	01:01:16	FRAME - ARROW 270
	F0070-HIN	01:01:16	FRAME - ARROW 270/400 '05
	F0080-HIN	01:01:16	TANK - TANGO/BRAVO/CONDOR 500
	F0090-HIN	01:01:16	FRAME - TANGO/BRAVO/CONDOR 500
	F0100-HIN	01:01:16	TANK - MERCURY 600
	F0110-HIN	01:01:16	TANK - MERCURY 925
	F0120-HIN	01:01:16	FRAME - MERCURY 600
	F0130-HIN	01:01:16	FRAME - MERCURY 600 '05
	F0140-HIN	01:01:16	FRAME - MERCURY 925 '05
	F0150-HIN	01:01:16	DRAWBARS - MERCURY/ARROW
	F0160-HIN	01:01:16	DRAWBAR - TURNABLE HITCH
	F0170-HIN	14:03:19	TANK - ZENIT 105/155 MANIFOLD
	F0180-HIN	14:03:19	TANK - ZENIT 105/155 BK
	F0190-HIN	01:01:16	FRAME - ZENIT 105/155 PNEUM.
	F0200-HIN	01:01:16	FRAME - ZENIT 105/155 AXIAL

TANK - LB 50
F0010-HIN, 01:01:16

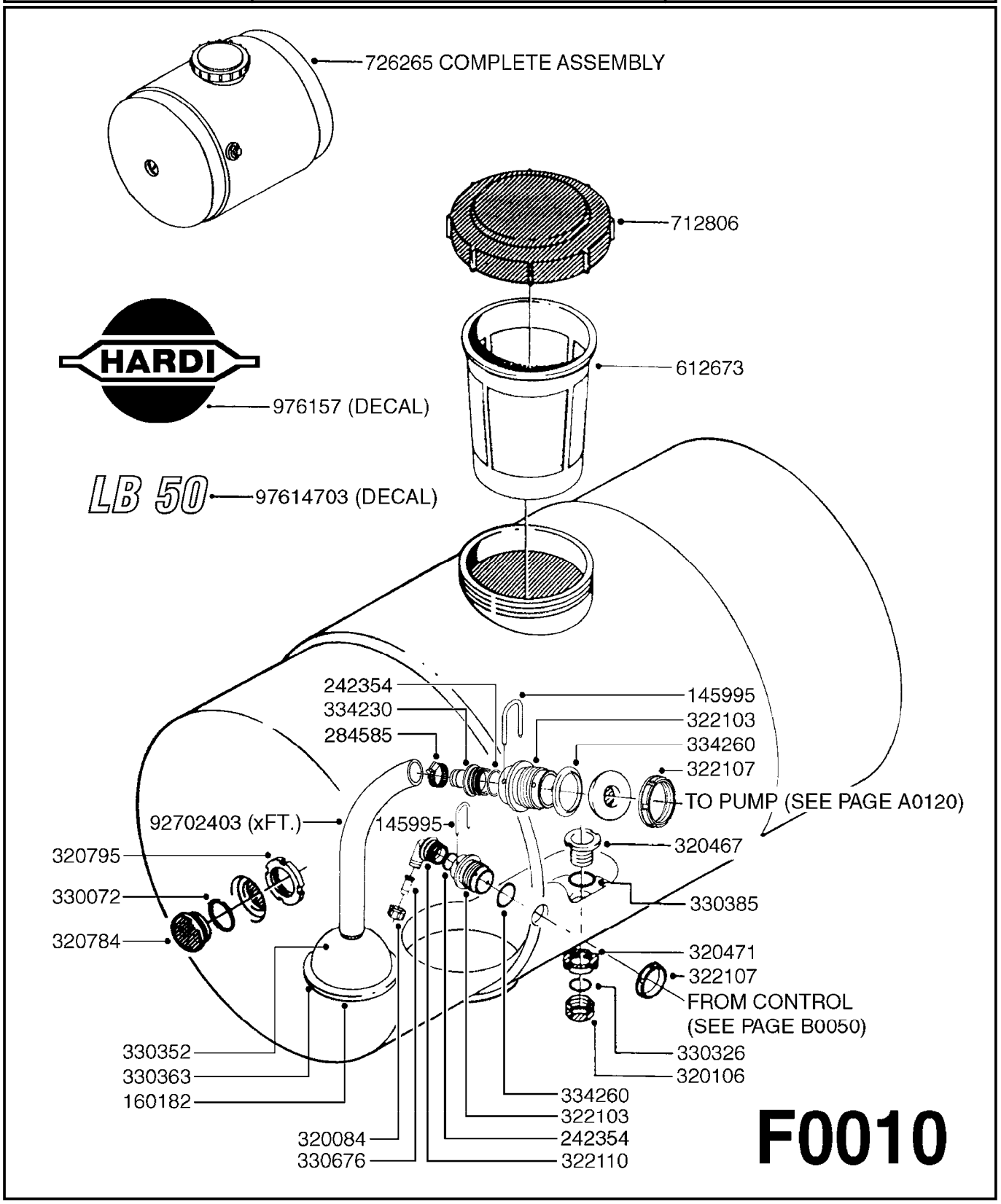

Agroparts: www.HARDI-INTERNATIONAL.com

TANK - LB 50
F0010-HIN, 01:01:16

Date 12.08.2020 11:40

parts-n°	order qty	description
145995	1	FITT.DK S-53 FORK
160182	1	FILTER SCREEN
242354	1	O-RING D32.2X3.0 VITON
284585	1	CLAMP HOSE GEAR 1" MINI 020
320084	1	FITT.DK NUT 1/2" BSP
320106	1	FITT.DK CAPNUT 1" BSP
320467	1	FITT.DK BULKHEAD 1"BSP SINGLE
320471	1	FITT.DK NUT 1" BSP JAMB
320784	1	FITT.DK CAP 1-1/2" BSP
320795	1	FITT.DK NUT 1-1/2" BSP JAMB
322103	1	FITT.DK S-53 BULKHEAD
322107	1	FITT.DK S-53 BULKHEAD NUT
322110	1	FITT.DK S-53 ELB. 1/2" BSP
330072	1	O-RING D53.5/D45.5X4
330326	1	O-RING D30/D24X2 F.1"NUT
330352	1	FOAM DROP HOUSING
330363	1	RETAINER FILTER GAUGE
330385	1	O-RING D38,8/32,8XD3
330676	1	FITT.DK HB 3/8" F. 1/2" NUT
334230	1	FITT.DK S-53 STR.1"
334260	1	GASKET F. S-53 BULKHEAD
612673	1	FILTER BASKET F. ES30/ES53
712806	1	TANK LID WITH VENT S226 RED
726265	1	TANK 53 GAL. F/BNL
976157	1	DECAL COMPANY (4.4" X 4.6")
92702403	1	HOSE PVC SUCT GRAY 1"
97614703	1	DECAL LB 50 2011

FRAME LB 50
F0020-HIN, 01:01:16

Date 12.08.2020 11:40

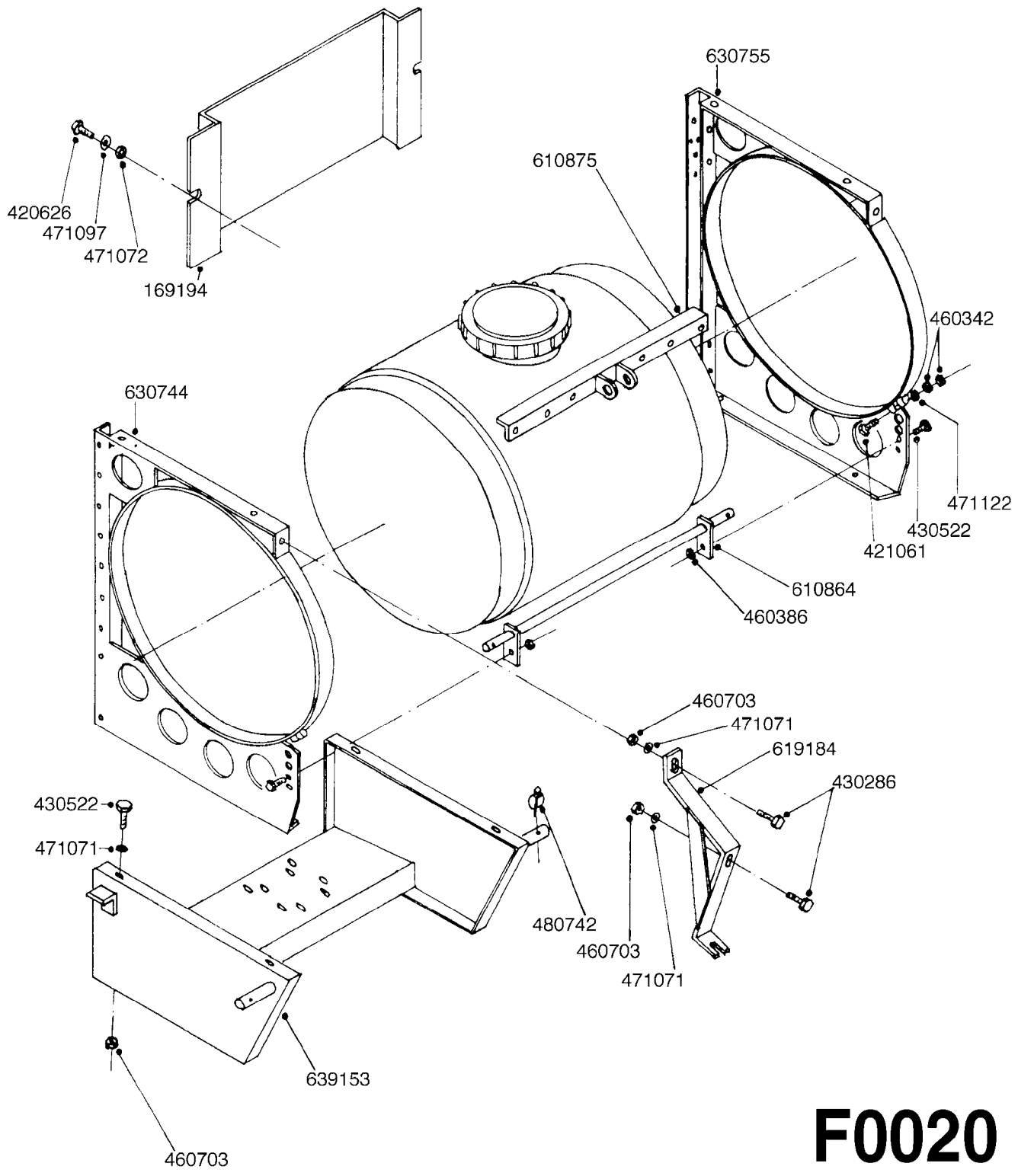

Agroparts: www.HARDI-INTERNATIONAL.com

FRAME LB 50
F0020-HIN, 01:01:16

Date 12.08.2020 11:40

parts-n°	order qty	description
169194	1	SHEILD LOWER F. BELT LB50
420626	1	BOLT HEX 8.8 DEL M10X20 FT
421061	1	BOLT HEX 8.8 DEL M10X100 DIN931
430286	1	BOLT HEX 8.8 DEL M12X30 FT
430522	1	BOLT HEX 8.8 DEL M12X25 FT
460342	1	NUT HEX M10 DEL DIN934
460386	1	NUT HEX M12X1.75
460703	1	NUT HEX M12X1.75 LOCK DIN985A2 SS
471071	1	WASHER M12 GALV
471072	1	WASHER M10 EL2
471097	1	WASHER D10 SAFETY
471122	1	WASHER, M10, Ø20/10.5X 2.0, SS
480742	1	PIN D8 SPLIT FOR TS
610864	1	SHAFT F.3PT HITCH BL53
610875	1	BRACKET TOP LINK BL25 FRAME
619184	1	3-POINT SUPPORT F.LB
630744	1	FRAME BL RIGHT
630755	1	FRAME BL LEFT
639153	1	PUMP SUPPORT LB

TANK - LE/LE-SPV/LP 100/150
F0030-HIN, 01:01:16

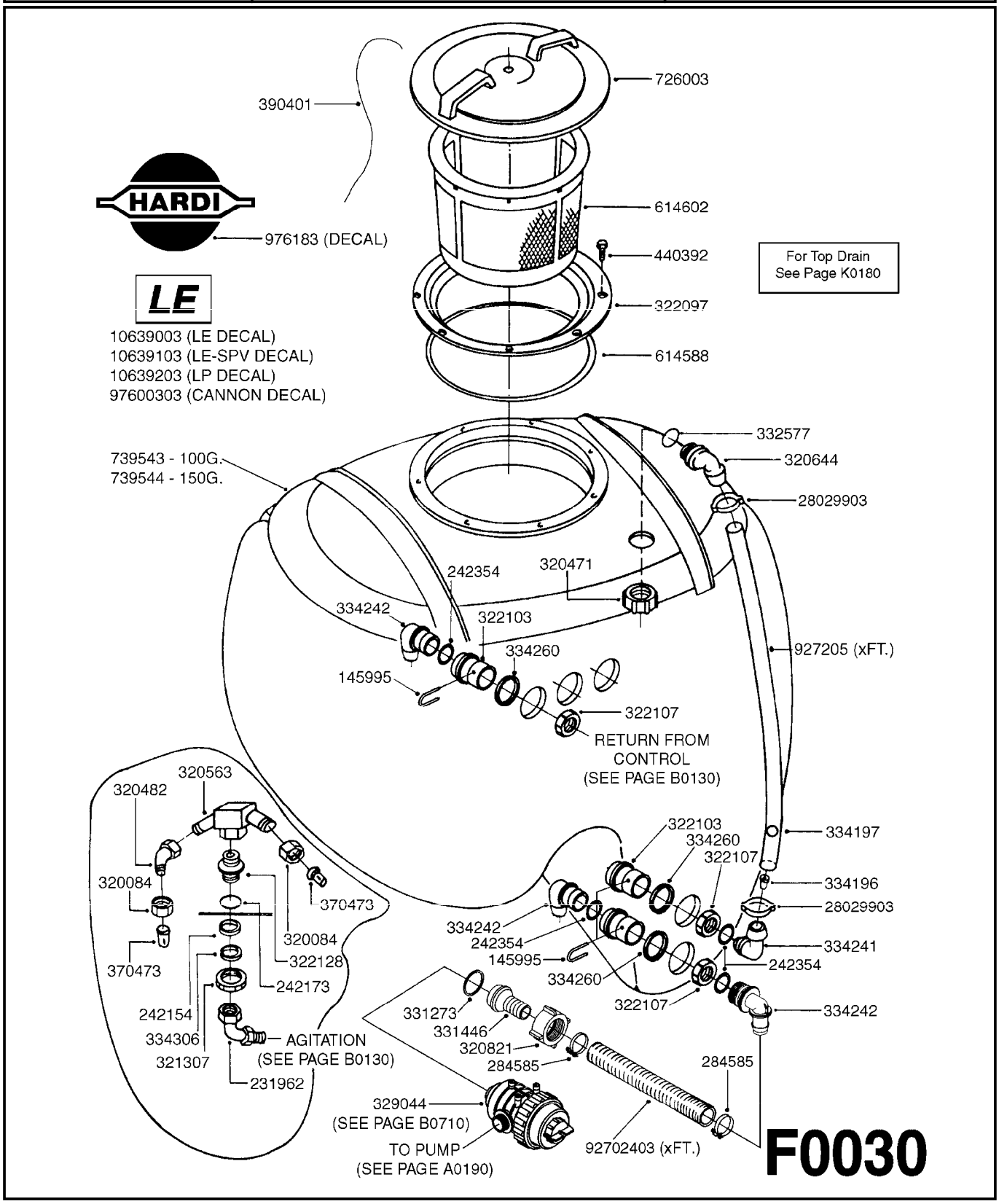

Agroparts: www.HARDI-INTERNATIONAL.com

TANK - LE/LE-SPV/LP 100/150
F0030-HIN, 01:01:16

Date 12.08.2020 11:40

parts-n°	order qty	description
145995	1	FITT.DK S-53 FORK
231962	1	ELBOW BRASS 1/2"
242154	1	WASHER RUBBER 1"
242173	1	O-RING D24X18X3
242354	1	O-RING D32.2X3.0 VITON
284585	1	CLAMP HOSE GEAR 1" MINI 020
320084	1	FITT.DK NUT 1/2" BSP
320471	1	FITT.DK NUT 1" BSP JAMB
320482	1	FITT.DK ELB. 1/2" BSP 60 DEG.
320563	1	FITT.DK 3 WAY 1/2" 110 DEG.
320644	1	FITT.DK ELB.3/4"HB X 1" BSP
320821	1	FITT.DK NUT 1-1/2" BSP
321307	1	FITT.DK NUT 1/2" BSP JAMB
322097	1	THREADED RING F. LID
322103	1	FITT.DK S-53 BULKHEAD
322107	1	FITT.DK S-53 BULKHEAD NUT
322128	1	NIPPLE 1/2"
329044	1	FILTER ARAG 1.5" 32 MESH LIFT
331273	1	O-RING D44/D38X2 F.1-1/2"
331446	1	FITT.DK HB 1" F.1-1/2" NUT
332577	1	O-RING D38/D30X4 F.1" PUR.
334196	1	PLUG F. LIQUID LEV. INDICATOR
334197	1	BALL F. LIQUID LEV. INDICATOR
334241	1	FITT.DK S-53 ELB.3/4"
334242	1	FITT.DK S-53 ELB.1"
334260	1	GASKET F. S-53 BULKHEAD
334306	1	WASHER D22 PA
370473	1	NOZZLE INJECTOR 5066-2.0
390401	1	CORD NYLON F.LID 900MM
440392	1	SCREW 6.3 X 25.0 DIN7981C TORX
614588	1	SEAL F. LID
614602	1	FILTER BASKET
726003	1	LID F. TANK
739543	1	TANK ASSY.POLY 100G LE,SPV,LP
739544	1	TANK ASSY.POLY 150G LE,SPV,LP
927205	1	HOSE R X CLEAR X 3/4 X 0012"
976183	1	DECAL COMPANY D.18,2 X 29,6
10639003	1	DECAL "LE"
10639103	1	DECAL "LE-SPV"
10639203	1	DECAL "LP"
28029903	1	CLAMP HOSE GEAR P3/4"-S1" 6712
92702403	1	HOSE PVC SUCT GRAY 1"
97600303	1	DECAL CANNON

FRAME - LE/LE-SPV/LP 100/150
F0040-HIN, 01:01:16

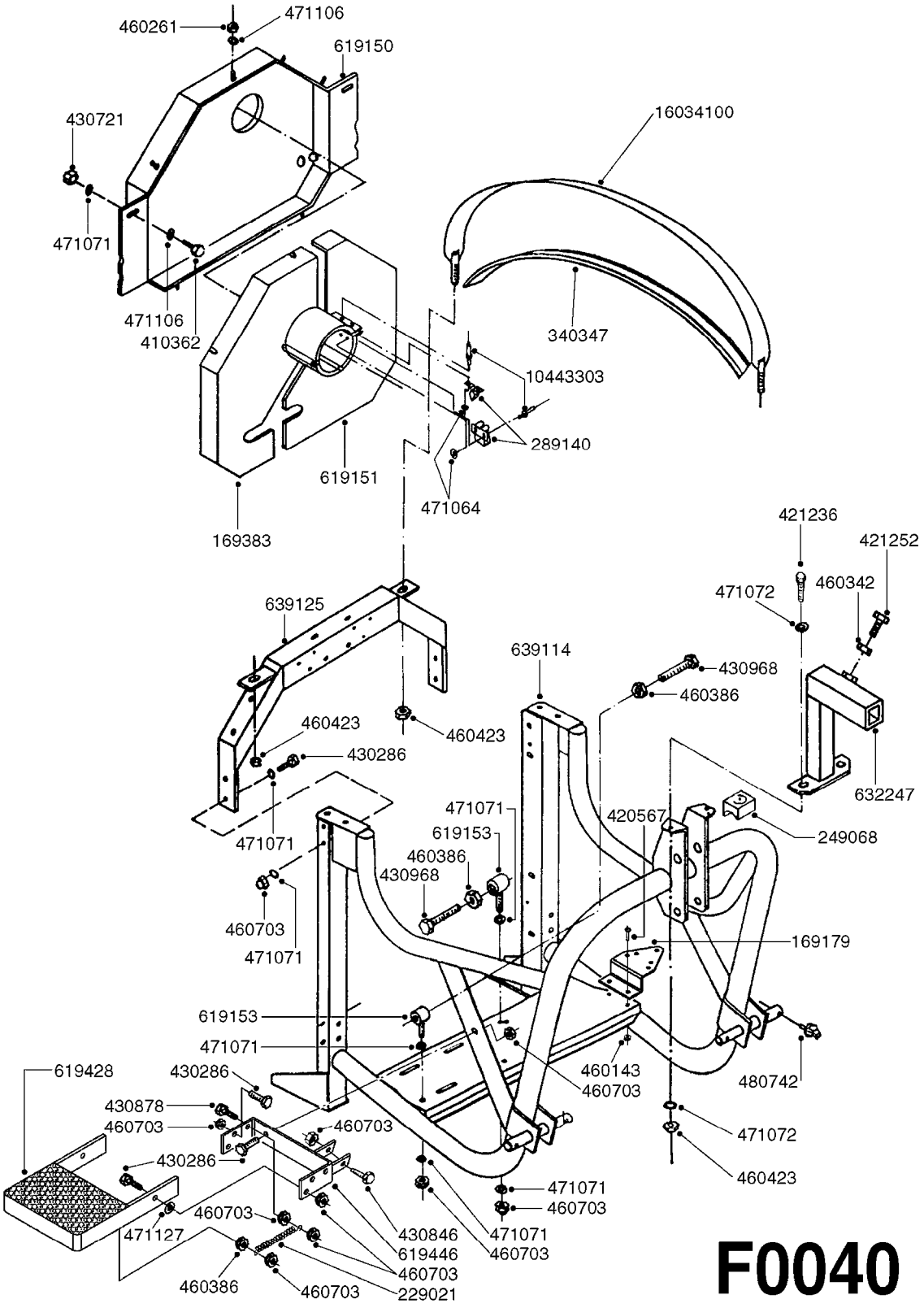

F0040

Agroparts: www.HARDI-INTERNATIONAL.com

FRAME - LE/LE-SPV/LP 100/150
F0040-HIN, 01:01:16

Date 12.08.2020 11:40

parts-n°	order qty	description
169179	1	MOUNT BRKT SUCT. FILTER LE/LP
169383	1	BELT GUARD COVER PLATE LE-SPV
229021	1	SPRING F.STEP LE/LP
249068	1	RUBBER BLOCKS 63X63X29
289140	1	QUICK LOCK F.LE
340347	1	TANK STRAP PACK.40X750MM 29.5"
410362	1	BOLT HEX 8.8 SS M6X20
420567	1	BOLT HEX 8.8 DEL M8X30 FT
421236	1	BOLT HEX M10X25 GALV.
421252	1	SCREW M10X30 CAP
430286	1	BOLT HEX 8.8 DEL M12X30 FT
430721	1	BOLT HEX 8.8 DEL M12X40 FT
430846	1	BOLT HEX 8.8 DEL M12X80
430878	1	BOLT HEX 8.8 DEL M12X45 DIN931
430968	1	SCREW M12X80 CAP
460143	1	LOCK NUT M8 SST A2 DIN985
460261	1	NUT HEX M6X1.00 LOCK DIN985 A2 SS
460342	1	NUT HEX M10 DEL DIN934
460386	1	NUT HEX M12X1.75
460423	1	NUT HEX M10X1.50 LOCK DIN985A2 SS
460703	1	NUT HEX M12X1.75 LOCK DIN985A2 SS
471064	1	WASHER D7/D3.2X0.5 STAINLESS
471071	1	WASHER M12 GALV
471072	1	WASHER M10 EL2
471106	1	WASHER D6
471127	1	WASHER, M12, Ø24/13X24X2.5 SS
480742	1	PIN D8 SPLIT FOR TS
619150	1	BELT SHIELD LE-SPV LP
619151	1	BELT SHIELD LE-SPV LP
619153	1	PUMP BELT TIGHTENER
619428	1	STEP F.LE/LP
619446	1	STEP MOUNT BRACKET F.LE/LP
632247	1	POST F.OPERATING UNIT BK/LX-LY
639114	1	FRAME LEP 300-600 POLY
639125	1	TOP SUPPORT KIT-LE/LP
10443303	1	RIVET 1/8 DIA. X 3/8 LONG
16034100	1	TANK STRAP CM1200 L=65"

TANK - ARROW 270/400
F0050-HIN, 01:01:16

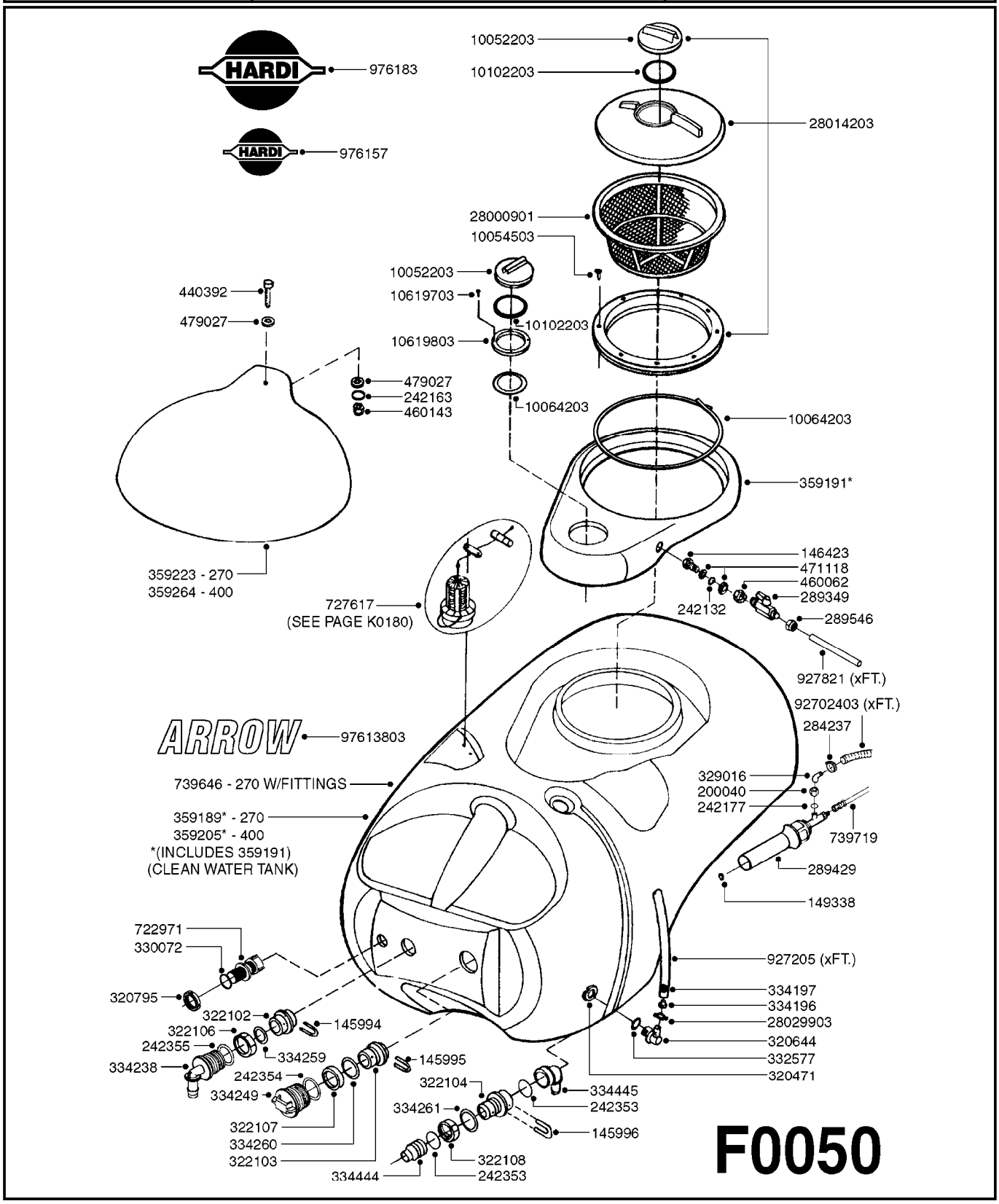

F0050

Agroparts: www.HARDI-INTERNATIONAL.com

TANK - ARROW 270/400
F0050-HIN, 01:01:16

Date 12.08.2020 11:40

parts-n°	order qty	description
145994	1	FITT.DK S-40 FORK
145995	1	FITT.DK S-53 FORK
145996	1	FITT.DK S-67 FORK
146423	1	INSERT 3/8'BRASS
149338	1	INTERMIX JET 5MM
200040	1	FITT. ARAG 1"
242132	1	O-RING 21 X 15 X 3
242163	1	O-RING 8 X 3
242177	1	O-RING D25.4 X 20.2 X 2.6
242353	1	O-RING 3 X 44.2 VITON
242354	1	O-RING D32.2X3.0 VITON
242355	1	O-RING D19.2X3.0 VITON F.S-40
284237	1	CLAMP HOSE GEAR D20/30
289349	1	BALL VALVE 3/8" M-H
289429	1	AGITATION INJECTOR DUAL INPUT
289546	1	NUT F.NOZZLE HOLDER ZENIT
320471	1	FITT.DK NUT 1" BSP JAMB
320644	1	FITT.DK ELB.3/4"HB X 1" BSP
320795	1	FITT.DK NUT 1-1/2" BSP JAMB
322102	1	FITT.DK S-40 BULKHEAD
322103	1	FITT.DK S-53 BULKHEAD
322104	1	FITT.DK S-67 BULKHEAD
322106	1	FITT.DK S-40 BULKHEAD NUT
322107	1	FITT.DK S-53 BULKHEAD NUT
322108	1	FITT.DK S-67 BULKHEAD NUT
329016	1	BØJNING
330072	1	O-RING D53.5/D45.5X4
332577	1	O-RING D38/D30X4 F.1" PUR.
334196	1	PLUG F. LIQUID LEV. INDICATOR
334197	1	BALL F. LIQUID LEV. INDICATOR
334238	1	FITT.DK S-40 ELB.1/2"
334249	1	FITT.DK S-53 PLUG
334259	1	GASKET F. S-40 BULKHEAD
334260	1	GASKET F. S-53 BULKHEAD
334261	1	GASKET F. S-67 BULKHEAD
334444	1	FITT.DK S-67 STR.1-1/2" PVC
334445	1	FITT.DK S-67 ELB.1-1/2"
359189	1	TANK RAW 270 GAL. ARROW
359191	1	CLEAN WATER TANK - ARROW
359205	1	TANK RAW 400 GAL. ARROW
359223	1	TANK ACCESS COVER - ARROW 270
359264	1	TANK ACCESS COVER - ARROW 400
440392	1	SCREW 6.3 X 25.0 DIN7981C TORX
460062	1	NUT HEX 3/8' GALV.
460143	1	LOCK NUT M8 SST A2 DIN985
471118	1	WASHER D16 TENSION
479027	1	WASHER D8X24X2 DIN9021
722971	1	SAFETY VALVE SCF 217PSI(15BAR)
727617	1	FITT.DK S-93 BOTTOM VALVE 2'
739646	1	TANK W/FITTINGS, ARROW 270
739719	1	HOSE ASSEMBLY D12 X 3400 1/2"
927205	1	HOSE R X CLEAR X 3/4 X 0012"
927821	1	CLEAR HOSE D12X10 PA1012
976157	1	DECAL COMPANY (4.4" X 4.6")
976183	1	DECAL COMPANY D.18,2 X 29,6
10052203	1	LID VENT ASSY
10054503	1	SCREW 3/4" SELF TAPPING
10064203	1	SET SEALING SPONGE 1 Ft BULK
10102203	1	GASKET F.16" LID BREATHER
10619703	1	SCREW SS #6x3/4' SELF TAPPING
10619803	1	LID HOUSING TREADED F. 6'

TANK - ARROW 270/400
F0050-HIN, 01:01:16

Date 12.08.2020 11:40

parts-n°	order qty	description
28000901	1	FILTER, TOP MAIN TANK, Ø400 L275 300130
28014203	1	LID ASSY. (3-PC.) 16" ARAG
28029903	1	CLAMP HOSE GEAR P3/4"-S1" 6712
92702403	1	HOSE PVC SUCT GRAY 1"
97613803	1	DECAL ARROW 2011

FRAME - ARROW 270
F0060-HIN, 01:01:16

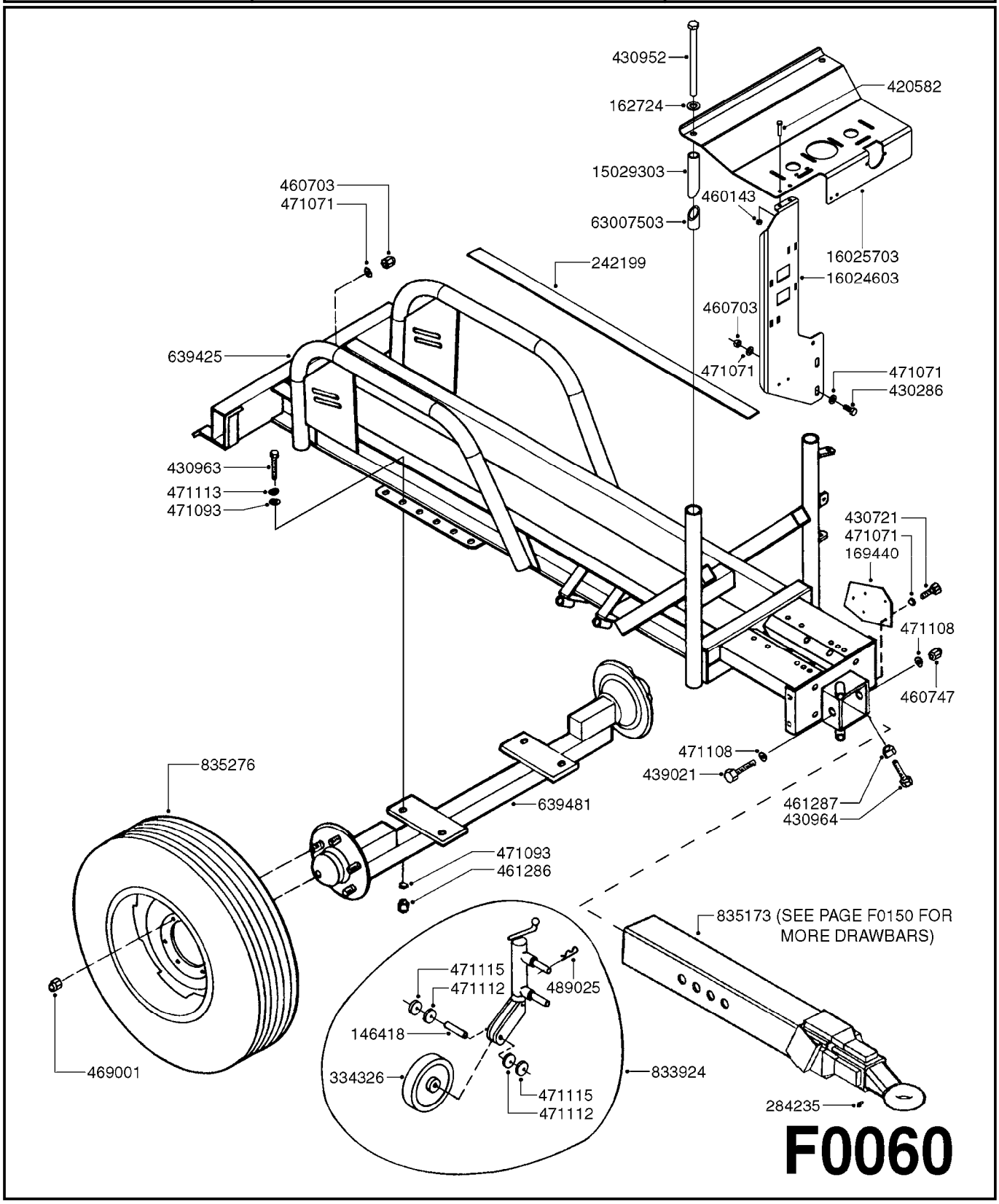

Agroparts: www.HARDI-INTERNATIONAL.com

FRAME - ARROW 270
F0060-HIN, 01:01:16

Date 12.08.2020 11:40

parts-n°	order qty	description
146418	1	SHAFT FOR SUPPORT WHEEL
162724	1	WASHER D25/D18.1X1
169440	1	BRACKET F.SUCTION FILTER
242199	1	TANK FRAME PACKING 1300X45X3
284235	1	ENGRASADOR M-6/100 RECTO
334326	1	WHEEL PLASTIC
420582	1	BOLT HEX 8.8 DEL M8X20 FT A2
430286	1	BOLT HEX 8.8 DEL M12X30 FT
430721	1	BOLT HEX 8.8 DEL M12X40 FT
430952	1	BOLT HEX M16X220 DIN931-8.8 DE
430963	1	BOLT HEX M14X40
430964	1	BOLT HEX M18X50
439021	1	BOLT HEX 8.8 DEL M24X160 GALV.
460143	1	LOCK NUT M8 SST A2 DIN985
460703	1	NUT HEX M12X1.75 LOCK DIN985A2 SS
460747	1	NUT HEX M24 LOCK
461286	1	NUT M14 SAFETY
461287	1	NUT HEX M18
469001	1	NUT, RIM ARROW
471071	1	WASHER M12 GALV
471093	1	WASHER D14 GALV. (168873)
471108	1	WASHER D44D25X4.5
471112	1	WASHER D20
471113	1	WASHER D14 TENSION
471115	1	WASHER D20
489025	1	'R' PIN D.4
639425	1	FRAME - ARROW 270
639481	1	AXLE - FIXED/ARROW
833924	1	JACK WITH TRANSPORT WHEEL
835173	1	DRAWBAR RING HITCH ARROW
835276	1	WHEELS 10/80-12 8PR"I"PACK CPL
15029303	1	TUBE ID CLAMP 1.5" Ø ARROW 250
16024603	1	SUPPORT HYD VALVE MISTBLOWER
16025703	1	BRACKET MANIFOLD ARROW 270
63007503	1	TUBE CLAMP 1.5" DIA ARROW

FRAME - ARROW 270/400 '05
F0070-HIN, 01:01:16

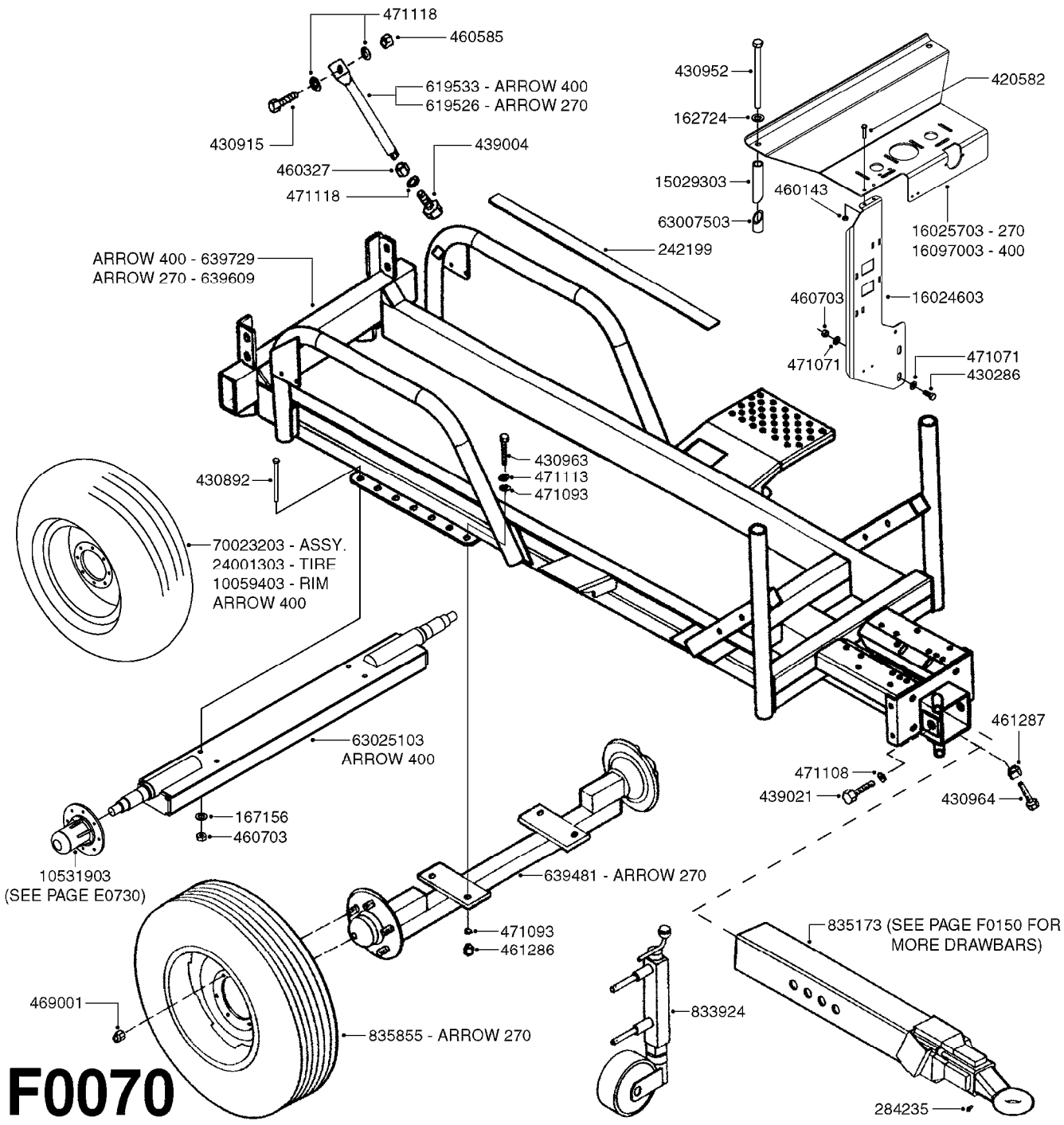

Agroparts: www.HARDI-INTERNATIONAL.com

FRAME - ARROW 270/400 '05
F0070-HIN, 01:01:16

Date 12.08.2020 11:40

parts-n°	order qty	description
162724	1	WASHER D25/D18.1X1
167156	1	WASHER D46.5/D12.4X2.5
242199	1	TANK FRAME PACKING 1300X45X3
284235	1	ENGRASADOR M-6/100 RECTO
420582	1	BOLT HEX 8.8 DEL M8X20 FT A2
430286	1	BOLT HEX 8.8 DEL M12X30 FT
430892	1	BOLT HEX 8.8 DEL M12X110
430915	1	BOLT HEX 8.8 DEL M16X70
430952	1	BOLT HEX M16X220 DIN931-8.8 DE
430963	1	BOLT HEX M14X40
430964	1	BOLT HEX M18X50
439004	1	BOLT HEX M16 X 100 GALV.
439021	1	BOLT HEX 8.8 DEL M24X160 GALV.
460143	1	LOCK NUT M8 SST A2 DIN985
460327	1	NUT HEX M16X2
460585	1	LOCKING NUT M16 DIN985 A2 SS
460703	1	NUT HEX M12X1.75 LOCK DIN985A2 SS
461286	1	NUT M14 SAFETY
461287	1	NUT HEX M18
469001	1	NUT, RIM ARROW
471071	1	WASHER M12 GALV
471093	1	WASHER D14 GALV. (168873)
471108	1	WASHER D44D25X4.5
471113	1	WASHER D14 TENSION
471118	1	WASHER D16 TENSION
619526	1	BRACE ARM 295MM ARROW 270
619533	1	BRACE ARM 234MM ARROW 400
639481	1	AXLE - FIXED/ARROW
639609	1	FRAME - ARROW 270 PLUS
639729	1	FRAME - ARROW 400 PLUS
833924	1	JACK WITH TRANSPORT WHEEL
835173	1	DRAWBAR RING HITCH ARROW
835855	1	TIRE PGK ARRW 26X12-12PLY PAIR
10059403	1	RIM 15X10 X 8-8-6 +1.062OFFSET
10531903	1	HUB ASSY.COMP.F.2-1/8" SPINDLE
15029303	1	TUBE ID CLAMP 1.5" Ø ARROW 250
16024603	1	SUPPORT HYD VALVE MISTBLOWER
16025703	1	BRACKET MANIFOLD ARROW 270
16097003	1	BRACKET MANIFOLD ARROW 400
24001303	1	TIRE 12.5L-15SL 12 PLY
63007503	1	TUBE CLAMP 1.5" DIA ARROW
63025103	1	AXLE WELDMENT FIXD ARROW 400
70023203	1	TIRE ASSY 12.5L-15 12PLY8-8-6

TANK - TANGO/BRAVO/CONDOR 500
F0080-HIN, 01:01:16

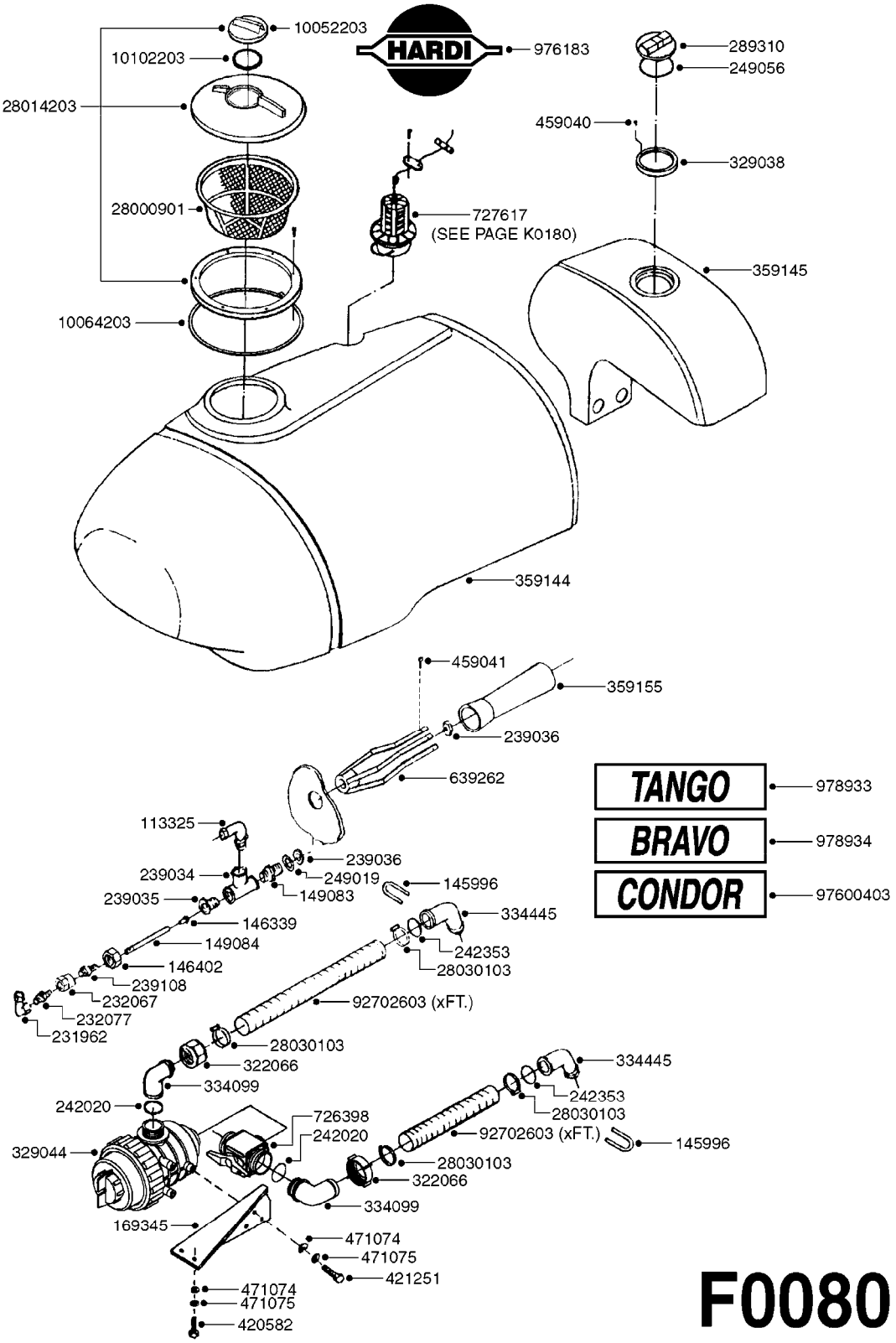

F0080

Agroparts: www.HARDI-INTERNATIONAL.com

TANK - TANGO/BRAVO/CONDOR 500
F0080-HIN, 01:01:16

Date 12.08.2020 11:40

parts-n°	order qty	description
145996	1	FITT.DK S-67 FORK
146339	1	AIRING SCREW D 1.75
146402	1	UNION NUT 32 MM
149083	1	NIPPLE 3/4"
149084	1	INJECTOR TUBE 3/4"
169345	1	SUCTION FILTER MOUNT BRACKET
231962	1	ELBOW BRASS 1/2"
232067	1	NIPPLE-SOCKET 1/2"X32MM
232077	1	HEX NIPPLE 1/2' BRASS
239034	1	TEE FITTING 3/4" BRASS
239035	1	NIPPLE 1/2"M - 3/4"F
239036	1	NUT 3/4"
239108	1	NIPPLE SOCKET 1/2"
242020	1	O-RING 39.2 X 3 VITON
242353	1	O-RING 3 X 44.2 VITON
249019	1	O-RING 3/4 26X5
249056	1	GASKET F.LID 289310 D.255
289310	1	RINSE TANK LID CR/TG
322066	1	FITT.DK S-56 NUT
329038	1	RINSE TANK LID RING CR/TG
329044	1	FILTER ARAG 1.5" 32 MESH LIFT
334099	1	FITT.DK S-61 ELB.1-1/2"110 DEG
334445	1	FITT.DK S-67 ELB.1-1/2"
359144	1	TANK CONDOR 500 GAL.
359145	1	FLUSH TANK CONDOR
359155	1	VENTURI TUBE
420582	1	BOLT HEX 8.8 DEL M8X20 FT A2
421251	1	BOLT HEX M8X15
459040	1	SCREW INOX 4.2X25 DIN7981
459041	1	SCREW
471074	1	WASHER M8 ELZ
471075	1	WASHER M8 LOCK
639262	1	FRONT BRACKET VENTURI
726398	1	VALVE 3-WAY BLACK
727617	1	FITT.DK S-93 BOTTOM VALVE 2'
976183	1	DECAL COMPANY D.18,2 X 29,6
978933	1	DECAL TANGO
978934	1	DECAL BRAVO
10052203	1	LID VENT ASSY
10064203	1	SET SEALING SPONGE 1 Ft BULK
10102203	1	GASKET F.16" LID BREATHER
28000901	1	FILTER, TOP MAIN TANK, Ø400 L275 300130
28014203	1	LID ASSY. (3-PC.) 16" ARAG
28030103	1	CLAMP HOSE GEAR P5/4-S1.5"6724
92702603	1	HOSE PVC SUCT GRAY 1-1/2"
97600403	1	DECAL CONDOR

	Agroparts: www.HARDI-INTERNATIONAL.com	
HARDI	FRAME - TANGO/BRAVO/CONDOR 500 F0090-HIN, 01:01:16	Page 0 Date 12.08.2020 11:40

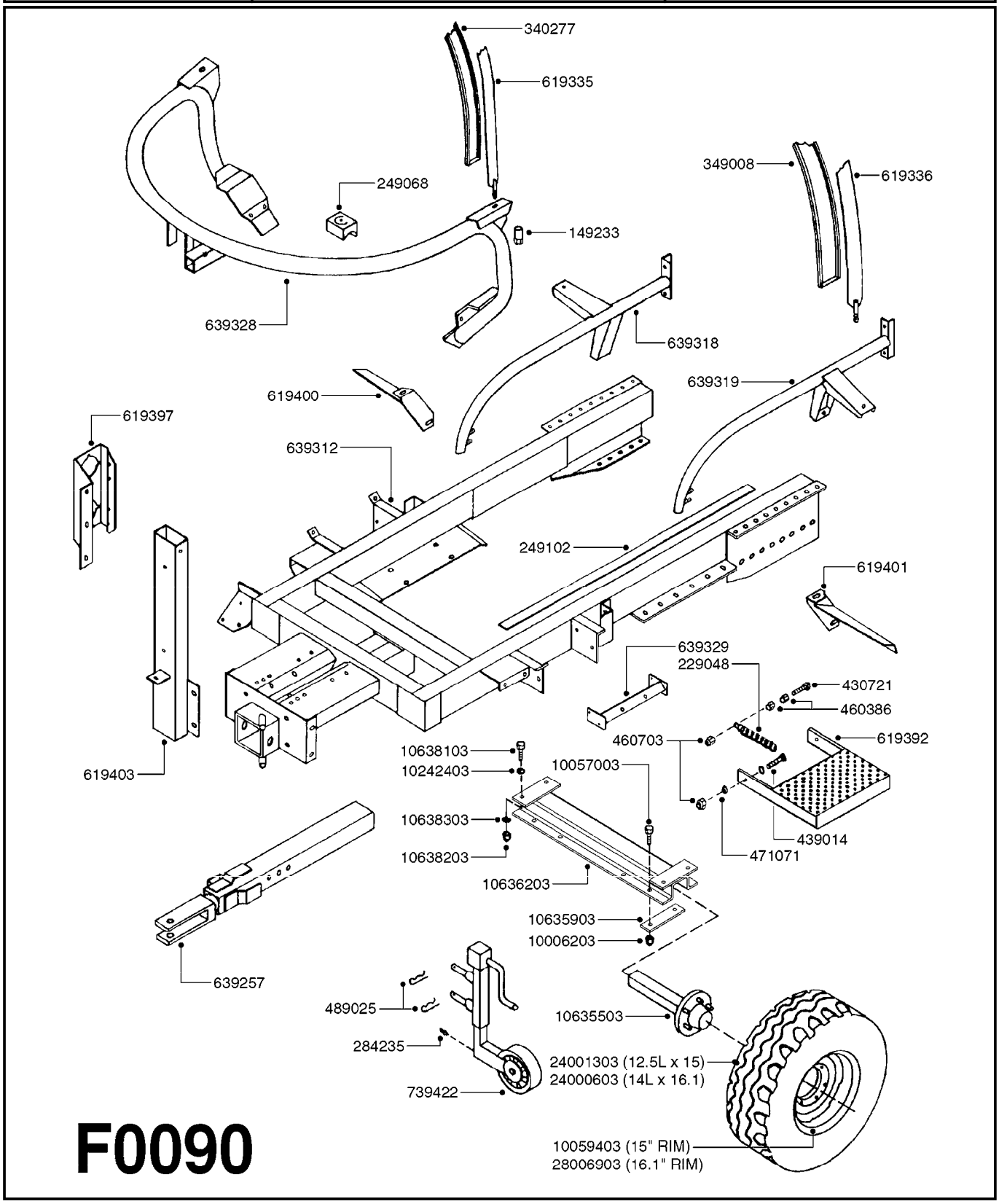

Agroparts: www.HARDI-INTERNATIONAL.com

FRAME - TANGO/BRAVO/CONDOR 500
F0090-HIN, 01:01:16

Date 12.08.2020 11:40

parts-n°	order qty	description
149233	1	SPACER NUT
229048	1	MR SPRING ADAPTABLE FOOTREST
249068	1	RUBBER BLOCKS 63X63X29
249102	1	TANK PACKING 15X60 EPDM-70
284235	1	ENGRASADOR M-6/100 RECTO
340277	1	TANK PACKING - 40mm WIDE x 12"
349008	1	TANK PACKING - 120MM WIDEX12"
430721	1	BOLT HEX 8.8 DEL M12X40 FT
439014	1	BOLT HEX 8.8 DEL M12X35
460386	1	NUT HEX M12X1.75
460703	1	NUT HEX M12X1.75 LOCK DIN985A2 SS
471071	1	WASHER M12 GALV
489025	1	'R' PIN D.4
619335	1	STEEL TANK STRAP L=1750 X 40
619336	1	STEEL TANK STRAP L=1950 X 120
619392	1	FOOT STEP TANGO/BRAVO/CONDOR
619397	1	MANIFOLD BRACKET CONDOR
619400	1	MUD SCRAPER CONDOR RH
619401	1	MUD SCRAPER CONDOR LH
619403	1	FRONT FRAME SUPPORT - CONDOR
639257	1	DRAWBAR F.TANGO/BRAVO/CONDOR
639312	1	FRAME CONDOR 500 GAL.
639318	1	TANK SUPPORT CONDOR 500 - RH
639319	1	TANK SUPPORT CONDOR 500 - LH
639328	1	FRONT TANK SUPPORT-CONDOR 500
639329	1	FOOT STEP MNT.BRKT. - CONDOR
739422	1	CPL. JACK STAND FOR TANGO
10006203	1	NUT HEX NC LOCK 5/8"
10057003	1	BOLT HEX 5/8 NC GR.5 02.50'
10059403	1	RIM 15X10 X 8-8-6 +1.062OFFSET
10242403	1	WASHER PLATE 9/16
10635503	1	INSERT ASSY MIST/BLWR 270/500G
10635903	1	CLAMP PLATE F.AXLE M/B 270/500
10636203	1	AXLE BEAM W/M M/B 270/500G
10638103	1	BOLT HEX 9/16 NF GR5 01.50'
10638203	1	NUT HEX NF 9/16'
10638303	1	WASHER LOCK 9/16'
24000603	1	TIRE 14L X 16.1 8 PLY
24001303	1	TIRE 12.5L-15SL 12 PLY
28006903	1	WHEEL RIM 16.1" X 11" 8-8-6"

TANK - MERCURY 600
F0100-HIN, 01:01:16

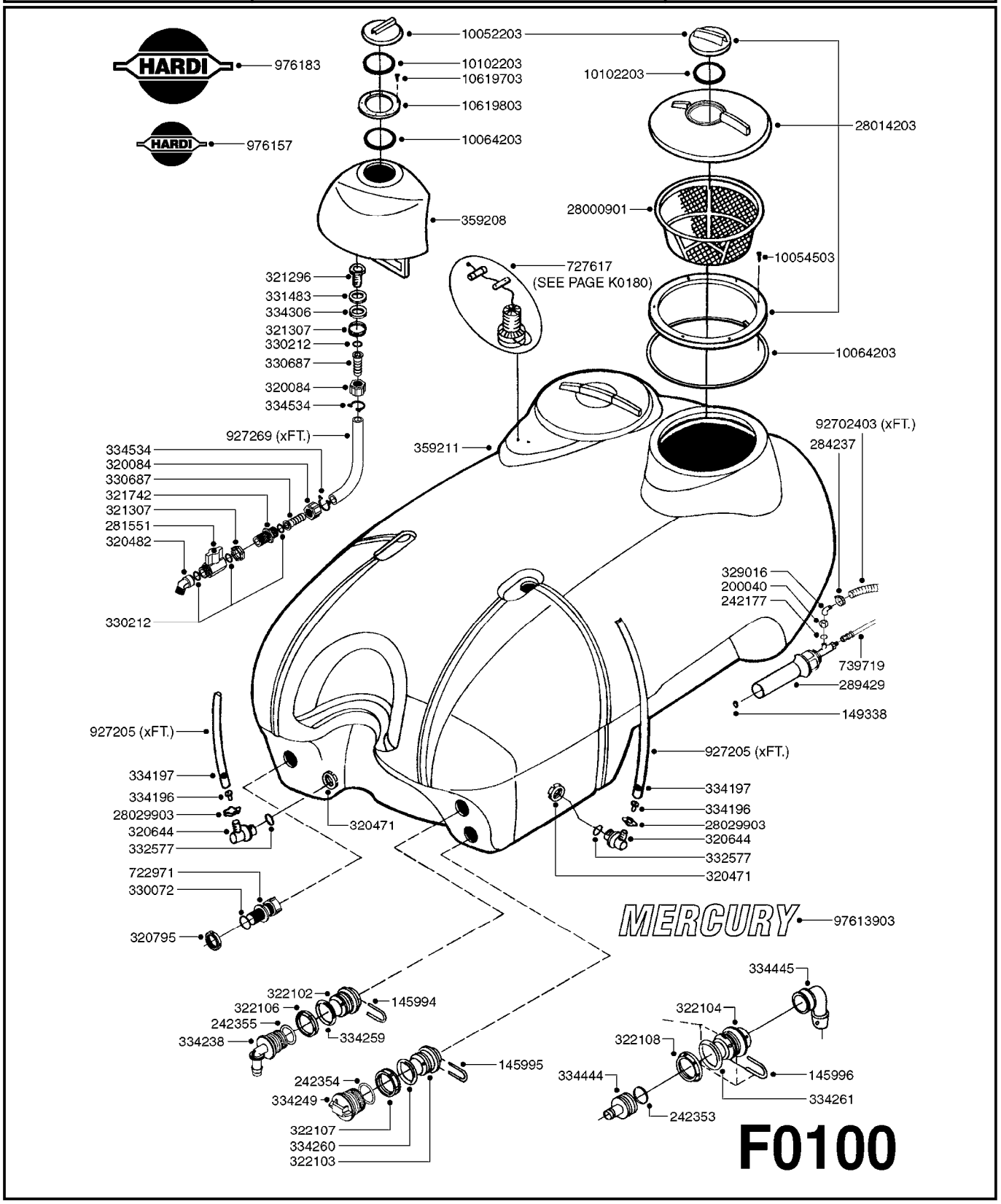

Agroparts: www.HARDI-INTERNATIONAL.com

TANK - MERCURY 600
F0100-HIN, 01:01:16

Date 12.08.2020 11:40

parts-n°	order qty	description
145994	1	FITT.DK S-40 FORK
145995	1	FITT.DK S-53 FORK
145996	1	FITT.DK S-67 FORK
149338	1	INTERMIX JET 5MM
200040	1	FITT. ARAG 1"
242177	1	O-RING D25.4 X 20.2 X 2.6
242353	1	O-RING 3 X 44.2 VITON
242354	1	O-RING D32.2X3.0 VITON
242355	1	O-RING D19.2X3.0 VITON F.S-40
281551	1	BALL VALVE 1/2"
284237	1	CLAMP HOSE GEAR D20/30
289429	1	AGITATION INJECTOR DUAL INPUT
320084	1	FITT.DK NUT 1/2" BSP
320471	1	FITT.DK NUT 1" BSP JAMB
320482	1	FITT.DK ELB. 1/2" BSP 60 DEG.
320644	1	FITT.DK ELB.3/4"HB X 1" BSP
320795	1	FITT.DK NUT 1-1/2" BSP JAMB
321296	1	FITT.DK BULKHEAD 1/2" BSP SING
321307	1	FITT.DK NUT 1/2" BSP JAMB
321742	1	FITT.DK BULKHEAD 1/2' BSP
322102	1	FITT.DK S-40 BULKHEAD
322103	1	FITT.DK S-53 BULKHEAD
322104	1	FITT.DK S-67 BULKHEAD
322106	1	FITT.DK S-40 BULKHEAD NUT
322107	1	FITT.DK S-53 BULKHEAD NUT
322108	1	FITT.DK S-67 BULKHEAD NUT
329016	1	BØJNING
330072	1	O-RING D53.5/D45.5X4
330212	1	O-RING D19/D14X2.4 F.1/2"NUT
330687	1	FITT.DK HB 1/2" F. 1/2" NUT
331483	1	WASHER RY-2
332577	1	O-RING D38/D30X4 F.1" PUR.
334196	1	PLUG F. LIQUID LEV. INDICATOR
334197	1	BALL F. LIQUID LEV. INDICATOR
334238	1	FITT.DK S-40 ELB.1/2"
334249	1	FITT.DK S-53 PLUG
334259	1	GASKET F. S-40 BULKHEAD
334260	1	GASKET F. S-53 BULKHEAD
334261	1	GASKET F. S-67 BULKHEAD
334306	1	WASHER D22 PA
334444	1	FITT.DK S-67 STR.1-1/2" PVC
334445	1	FITT.DK S-67 ELB.1-1/2"
334534	1	CLAMP HOSE PLASTIC 1/2"
359208	1	CLEAN WATER TANK - MERCURY
359211	1	TANK RAW 600 GAL. MERCURY
722971	1	SAFETY VALVE SCF 217PSI(15BAR)
727617	1	FITT.DK S-93 BOTTOM VALVE 2'
739719	1	HOSE ASSEMBLY D12 X 3400 1/2"
927205	1	HOSE R X CLEAR X 3/4 X 0012"
927269	1	HOSE R X PVC X 1/2 X 0012"
976157	1	DECAL COMPANY (4.4" X 4.6")
976183	1	DECAL COMPANY D.18,2 X 29,6
10052203	1	LID VENT ASSY
10054503	1	SCREW 3/4" SELF TAPPING
10064203	1	SET SEALING SPONGE 1 Ft BULK
10102203	1	GASKET F.16" LID BREATHER
10619703	1	SCREW SS #6x3/4' SELF TAPPING
10619803	1	LID HOUSING TREADED F. 6'
28000901	1	FILTER, TOP MAIN TANK, Ø400 L275 300130
28014203	1	LID ASSY. (3-PC.) 16" ARAG
28029903	1	CLAMP HOSE GEAR P3/4"-S1" 6712

parts-n°	order qty	description
92702403	1	HOSE PVC SUCT GRAY 1"
97613903	1	DECAL MERCURY 2011

TANK - MERCURY 925
F0110-HIN, 01:01:16

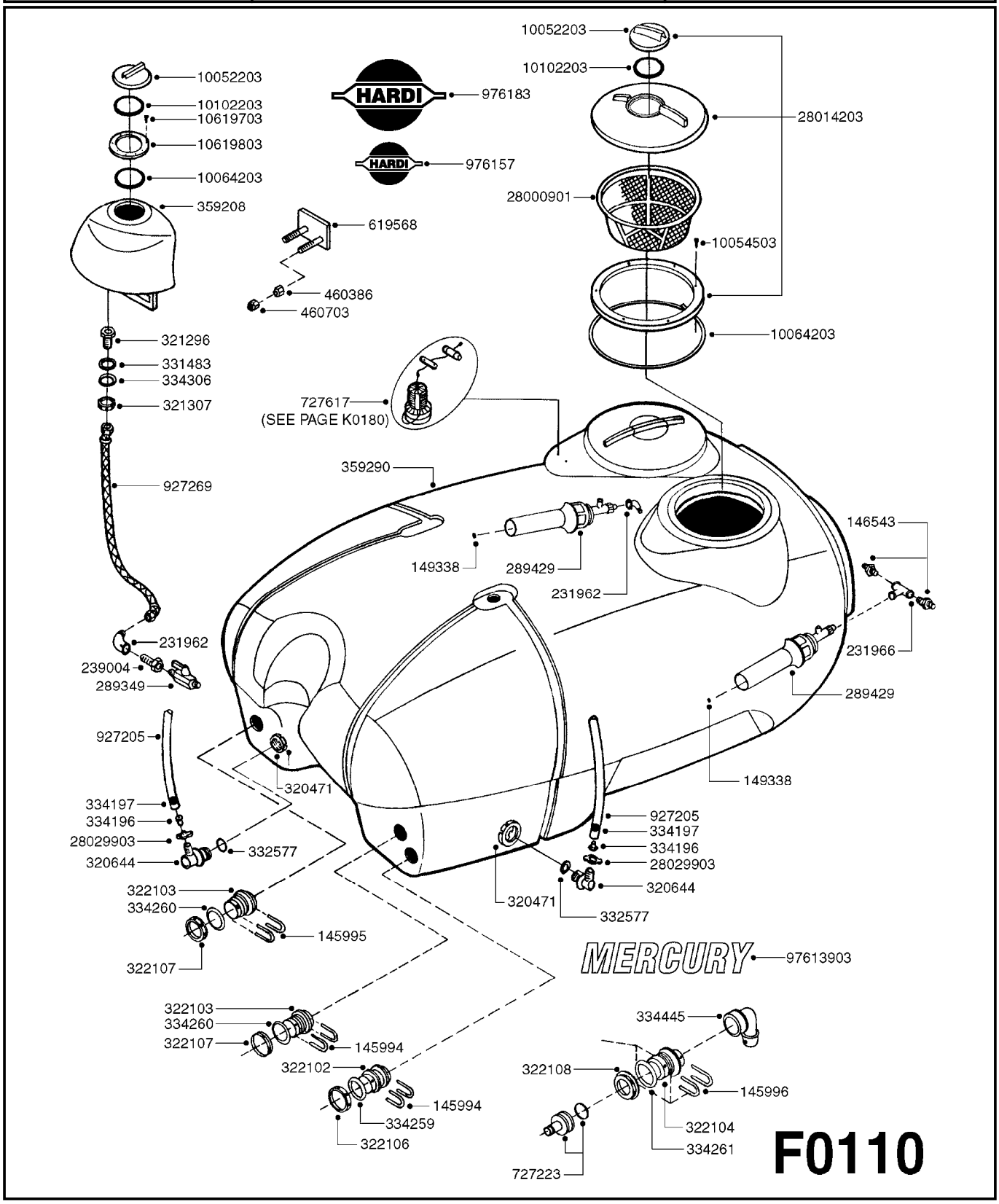

Agroparts: www.HARDI-INTERNATIONAL.com

TANK - MERCURY 925
F0110-HIN, 01:01:16

Date 12.08.2020 11:40

parts-n°	order qty	description
145994	1	FITT.DK S-40 FORK
145995	1	FITT.DK S-53 FORK
145996	1	FITT.DK S-67 FORK
146543	1	HEXAGON NIPPLE 1/2"
149338	1	INTERMIX JET 5MM
231962	1	ELBOW BRASS 1/2"
231966	1	TEE 1/2'
239004	1	BUSHING 1/2"-3/8" BRASS
289349	1	BALL VALVE 3/8" M-H
289429	1	AGITATION INJECTOR DUAL INPUT
320471	1	FITT.DK NUT 1" BSP JAMB
320644	1	FITT.DK ELB.3/4"HB X 1" BSP
321296	1	FITT.DK BULKHEAD 1/2" BSP SING
321307	1	FITT.DK NUT 1/2" BSP JAMB
322102	1	FITT.DK S-40 BULKHEAD
322103	1	FITT.DK S-53 BULKHEAD
322104	1	FITT.DK S-67 BULKHEAD
322106	1	FITT.DK S-40 BULKHEAD NUT
322107	1	FITT.DK S-53 BULKHEAD NUT
322108	1	FITT.DK S-67 BULKHEAD NUT
331483	1	WASHER RY-2
332577	1	O-RING D38/D30X4 F.1" PUR.
334196	1	PLUG F. LIQUID LEV. INDICATOR
334197	1	BALL F. LIQUID LEV. INDICATOR
334259	1	GASKET F. S-40 BULKHEAD
334260	1	GASKET F. S-53 BULKHEAD
334261	1	GASKET F. S-67 BULKHEAD
334306	1	WASHER D22 PA
334445	1	FITT.DK S-67 ELB.1-1/2"
359208	1	CLEAN WATER TANK - MERCURY
359290	1	TANK, DRILLED 925 GAL. MERCURY
460386	1	NUT HEX M12X1.75
460703	1	NUT HEX M12X1.75 LOCK DIN985A2 SS
619568	1	TANK SUPPORT BRACKET
727223	1	FITT.S67 1.5" STRAIT S W/ORING
727617	1	FITT.DK S-93 BOTTOM VALVE 2'
927205	1	HOSE R X CLEAR X 3/4 X 0012"
927269	1	HOSE R X PVC X 1/2 X 0012"
976157	1	DECAL COMPANY (4.4" X 4.6")
976183	1	DECAL COMPANY D.18,2 X 29,6
10052203	1	LID VENT ASSY
10054503	1	SCREW 3/4" SELF TAPPING
10064203	1	SET SEALING SPONGE 1 Ft BULK
10102203	1	GASKET F.16" LID BREATHER
10619703	1	SCREW SS #6x3/4' SELF TAPPING
10619803	1	LID HOUSING TREADED F. 6'
28000901	1	FILTER, TOP MAIN TANK, Ø400 L275 300130
28014203	1	LID ASSY. (3-PC.) 16" ARAG
28029903	1	CLAMP HOSE GEAR P3/4"-S1" 6712
97613903	1	DECAL MERCURY 2011

FRAME - MERCURY 600
F0120-HIN, 01:01:16

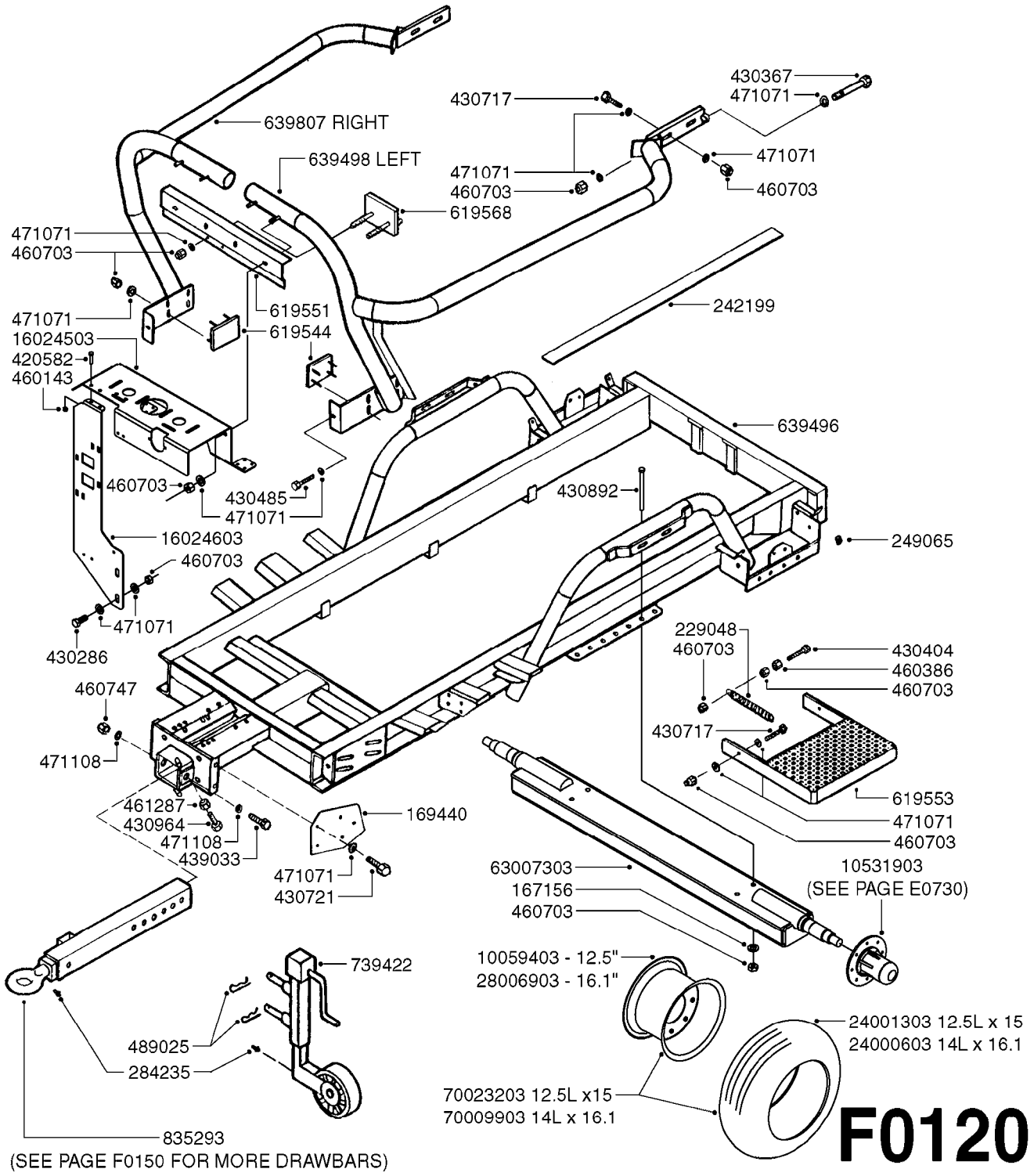

F0120

Agroparts: www.HARDI-INTERNATIONAL.com

FRAME - MERCURY 600
F0120-HIN, 01:01:16

Date 12.08.2020 11:40

parts-n°	order qty	description
167156	1	WASHER D46.5/D12.4X2.5
169440	1	BRACKET F.SUCTION FILTER
229048	1	MR SPRING ADAPTABLE FOOTREST
242199	1	TANK FRAME PACKING 1300X45X3
249065	1	TOP FOR FOOT STEP
284235	1	ENGRASADOR M-6/100 RECTO
420582	1	BOLT HEX 8.8 DEL M8X20 FT A2
430286	1	BOLT HEX 8.8 DEL M12X30 FT
430367	1	BOLT HEX 8.8 DEL M12X100 DIN931
430404	1	BOLT HEX 8.8 DEL M12X50
430485	1	BOLT HEX 8.8 DEL M12X90
430717	1	BOLT HEX 8.8 RAW M12x40
430721	1	BOLT HEX 8.8 DEL M12X40 FT
430892	1	BOLT HEX 8.8 DEL M12X110
430964	1	BOLT HEX M18X50
439033	1	BOLT HEX M24X170 GALV.
460143	1	LOCK NUT M8 SST A2 DIN985
460386	1	NUT HEX M12X1.75
460703	1	NUT HEX M12X1.75 LOCK DIN985A2 SS
460747	1	NUT HEX M24 LOCK
461287	1	NUT HEX M18
471071	1	WASHER M12 GALV
471108	1	WASHER D44D25X4.5
489025	1	'R' PIN D.4
619544	1	FRONT PLATE - MERCURY FRAME
619551	1	FRONT BRACKET F.RAILING MR600
619553	1	FOOT STEP MERCURY
619568	1	TANK SUPPORT BRACKET
639496	1	FRAME - MERCURY 600
639498	1	RAILING - MERCURY 600 LEFT
639807	1	RAILING - MERCURY 600 RIGHT
739422	1	CPL. JACK STAND FOR TANGO
835293	1	DRAWBAR RING HITCH
10059403	1	RIM 15X10 X 8-8-6 +1.062OFFSET
10531903	1	HUB ASSY.COMP.F.2-1/8" SPINDLE
16024503	1	SUPPORT MANIFOLD MERCURY
16024603	1	SUPPORT HYD VALVE MISTBLOWER
24000603	1	TIRE 14L X 16.1 8 PLY
24001303	1	TIRE 12.5L-15SL 12 PLY
28006903	1	WHEEL RIM 16.1" X 11" 8-8-6"
63007303	1	AXLE WELDMENT FIXD MERCURY 600
70009903	1	WHEEL ASSY. 14L x 16.1 8PLY
70023203	1	TIRE ASSY 12.5L-15 12PLY8-8-6

FRAME - MERCURY 600 '05
F0130-HIN, 01:01:16

Date 12.08.2020 11:40

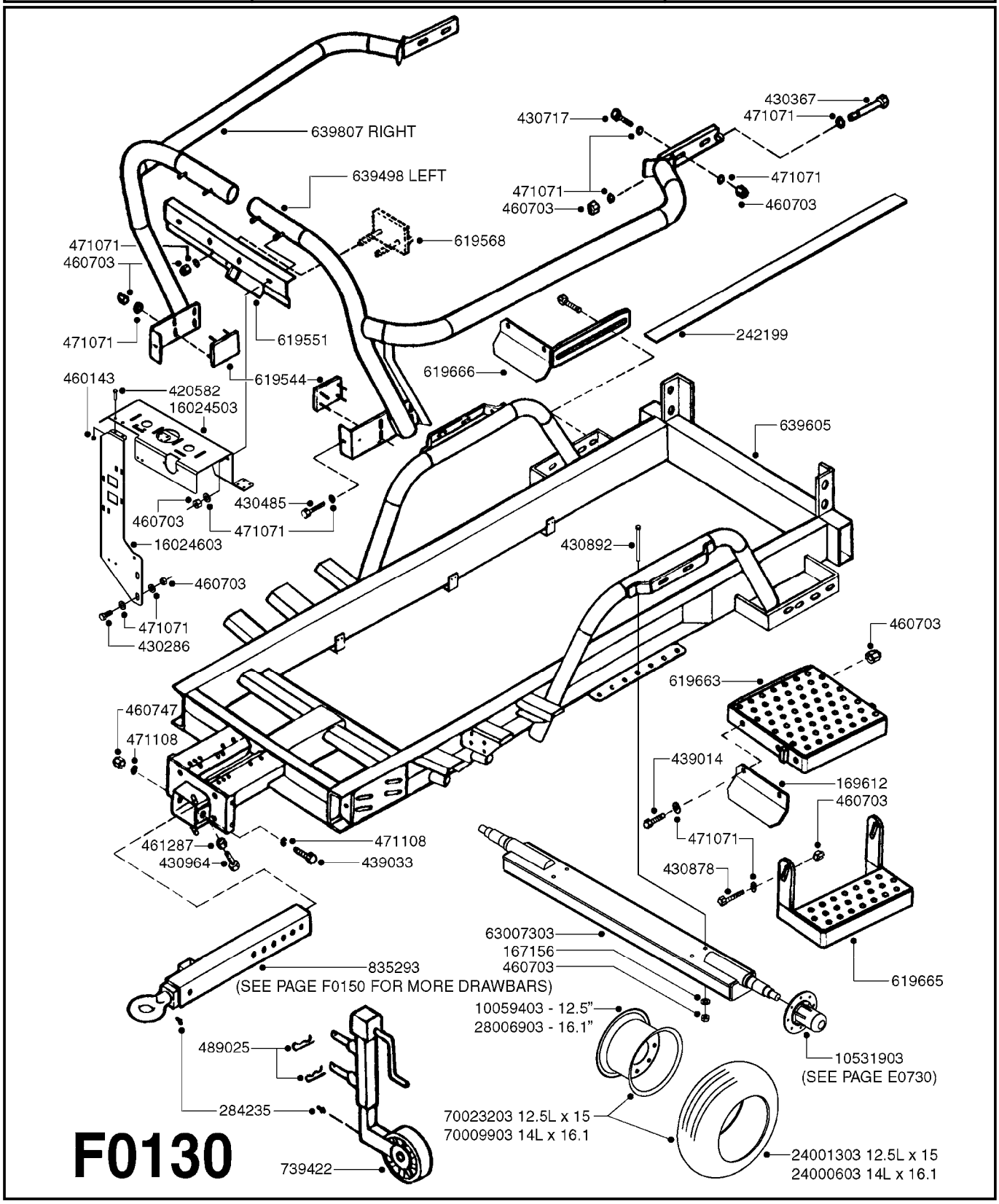

F0130

Agroparts: www.HARDI-INTERNATIONAL.com

FRAME - MERCURY 600 '05
F0130-HIN, 01:01:16

Date 12.08.2020 11:40

parts-n°	order qty	description
167156	1	WASHER D46.5/D12.4X2.5
169612	1	MUD SCRAPER(STEP)MERCURY PLUS
242199	1	TANK FRAME PACKING 1300X45X3
284235	1	ENGRASADOR M-6/100 RECTO
420582	1	BOLT HEX 8.8 DEL M8X20 FT A2
430286	1	BOLT HEX 8.8 DEL M12X30 FT
430367	1	BOLT HEX 8.8 DEL M12X100 DIN931
430485	1	BOLT HEX 8.8 DEL M12X90
430717	1	BOLT HEX 8.8 RAW M12x40
430878	1	BOLT HEX 8.8 DEL M12X45 DIN931
430892	1	BOLT HEX 8.8 DEL M12X110
430964	1	BOLT HEX M18X50
439014	1	BOLT HEX 8.8 DEL M12X35
439033	1	BOLT HEX M24X170 GALV.
460143	1	LOCK NUT M8 SST A2 DIN985
460703	1	NUT HEX M12X1.75 LOCK DIN985A2 SS
460747	1	NUT HEX M24 LOCK
461287	1	NUT HEX M18
471071	1	WASHER M12 GALV
471108	1	WASHER D44D25X4.5
489025	1	'R' PIN D.4
619544	1	FRONT PLATE - MERCURY FRAME
619551	1	FRONT BRACKET F.RAILING MR600
619568	1	TANK SUPPORT BRACKET
619663	1	FOOT STEP MERCURY PLUS
619665	1	BOTTOM FOOT STEP MERCURY PLUS
619666	1	MUD SCRAPER(FRAME)MERCURY PLUS
639498	1	RAILING - MERCURY 600 LEFT
639605	1	FRAME - MERCURY 2000 PLUS
639807	1	RAILING - MERCURY 600 RIGHT
739422	1	CPL. JACK STAND FOR TANGO
835293	1	DRAWBAR RING HITCH
10059403	1	RIM 15X10 X 8-8-6 +1.062OFFSET
10531903	1	HUB ASSY.COMP.F.2-1/8" SPINDLE
16024503	1	SUPPORT MANIFOLD MERCURY
16024603	1	SUPPORT HYD VALVE MISTBLOWER
24000603	1	TIRE 14L X 16.1 8 PLY
24001303	1	TIRE 12.5L-15SL 12 PLY
28006903	1	WHEEL RIM 16.1" X 11" 8-8-6"
63007303	1	AXLE WELDMENT FIXD MERCURY 600
70009903	1	WHEEL ASSY. 14L x 16.1 8PLY
70023203	1	TIRE ASSY 12.5L-15 12PLY8-8-6

FRAME - MERCURY 925 '05
F0140-HIN, 01:01:16

Date 12.08.2020 11:40

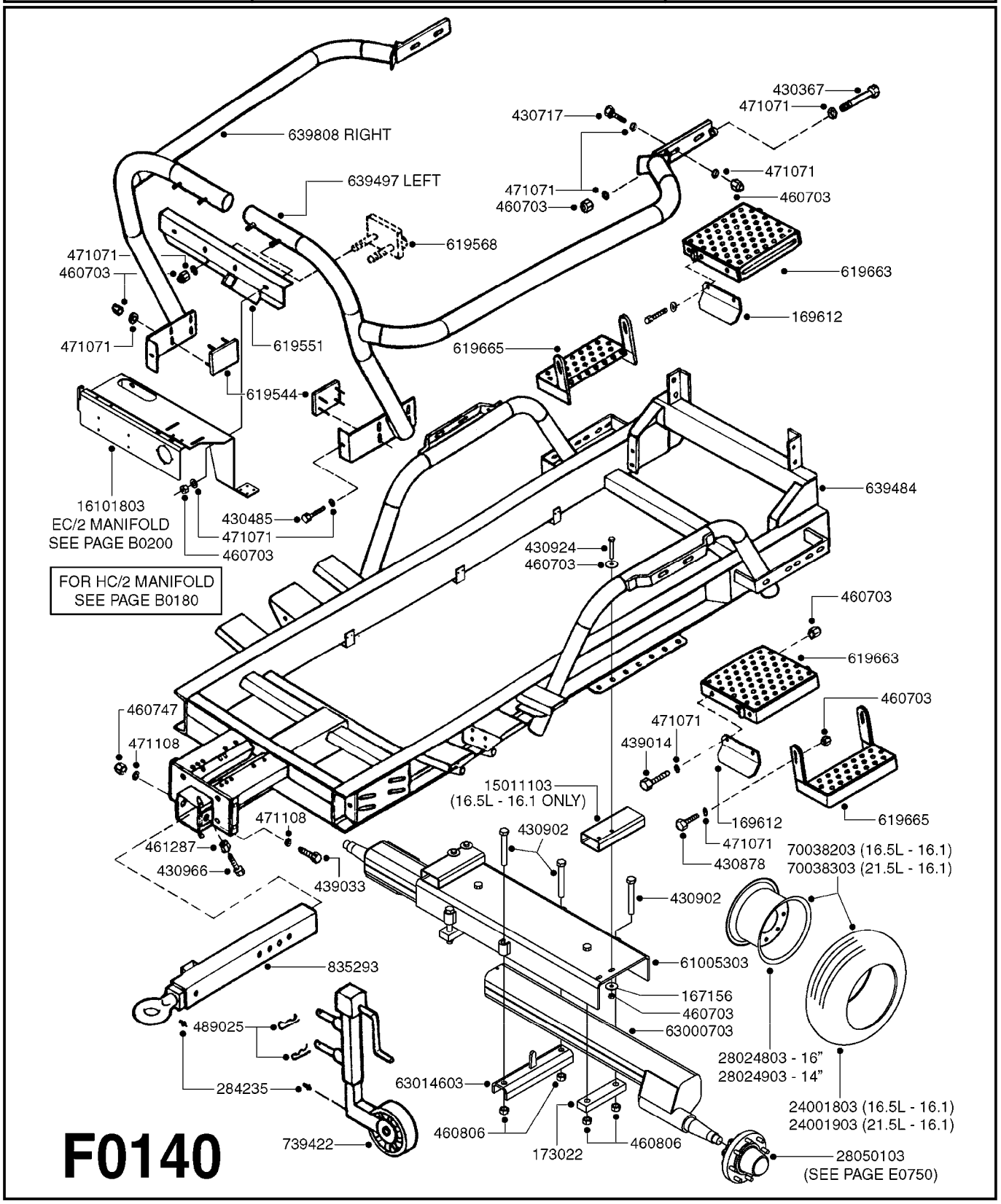

F0140

Agroparts: www.HARDI-INTERNATIONAL.com

FRAME - MERCURY 925 '05
F0140-HIN, 01:01:16

Date 12.08.2020 11:40

parts-n°	order qty	description
167156	1	WASHER D46.5/D12.4X2.5
169612	1	MUD SCRAPER(STEP)MERCURY PLUS
173022	1	FLATBAR 50X30 L=218/2XD22
284235	1	ENGRASADOR M-6/100 RECTO
430367	1	BOLT HEX 8.8 DEL M12X100 DIN931
430485	1	BOLT HEX 8.8 DEL M12X90
430717	1	BOLT HEX 8.8 RAW M12x40
430878	1	BOLT HEX 8.8 DEL M12X45 DIN931
430902	1	BOLT HEX 8.8 M20X150
430924	1	BOLT HEX 8.8 DEL M12 X 85
430966	1	BOLT HEX M18X60
439014	1	BOLT HEX 8.8 DEL M12X35
439033	1	BOLT HEX M24X170 GALV.
460703	1	NUT HEX M12X1.75 LOCK DIN985A2 SS
460747	1	NUT HEX M24 LOCK
460806	1	NUT HEX M20X2.50 LOCK DIN985A2 SS
461287	1	NUT HEX M18
471071	1	WASHER M12 GALV
471108	1	WASHER D44D25X4.5
489025	1	'R' PIN D.4
619544	1	FRONT PLATE - MERCURY FRAME
619551	1	FRONT BRACKET F.RAILING MR600
619568	1	TANK SUPPORT BRACKET
619663	1	FOOT STEP MERCURY PLUS
619665	1	BOTTOM FOOT STEP MERCURY PLUS
639484	1	FRAME - MERCURY 925
639497	1	RAILING - MERCURY 925 LEFT
639808	1	RAILING - MERCURY 925 RIGHT
739422	1	CPL. JACK STAND FOR TANGO
835293	1	DRAWBAR RING HITCH
15011103	1	RECT. TUBE SPACER MERC. 900
16101803	1	CONTROL BRACKET F. MERCURY EC2
24001803	1	TIRE 16.5L-16.1 10 PLY TURF
24001903	1	TIRE 21.5L-16.1 10 PLY TURF
28024803	1	WHEEL RIM 16.1X16 8-8-6 +1.125
28024903	1	WHEEL RIM 16.1X14" 8-8-6 -1.50
28050103	1	HUB F 3" 758 7500# PACKAGE
61005303	1	*AXLE NON-SUSP ADJ 900 MERC
63000703	1	AXLE INSERT W/M CM750
63014603	1	SUPPORT BAR CENT ADJ. MERC 900
70038203	1	*TIRE ASSY MR900 TF 8-8-6 16.1
70038303	1	*TIRE ASSY MR900 TF 8-8-6 21.5

DRAWBARS - MERCURY/ARROW
F0150-HIN, 01:01:16

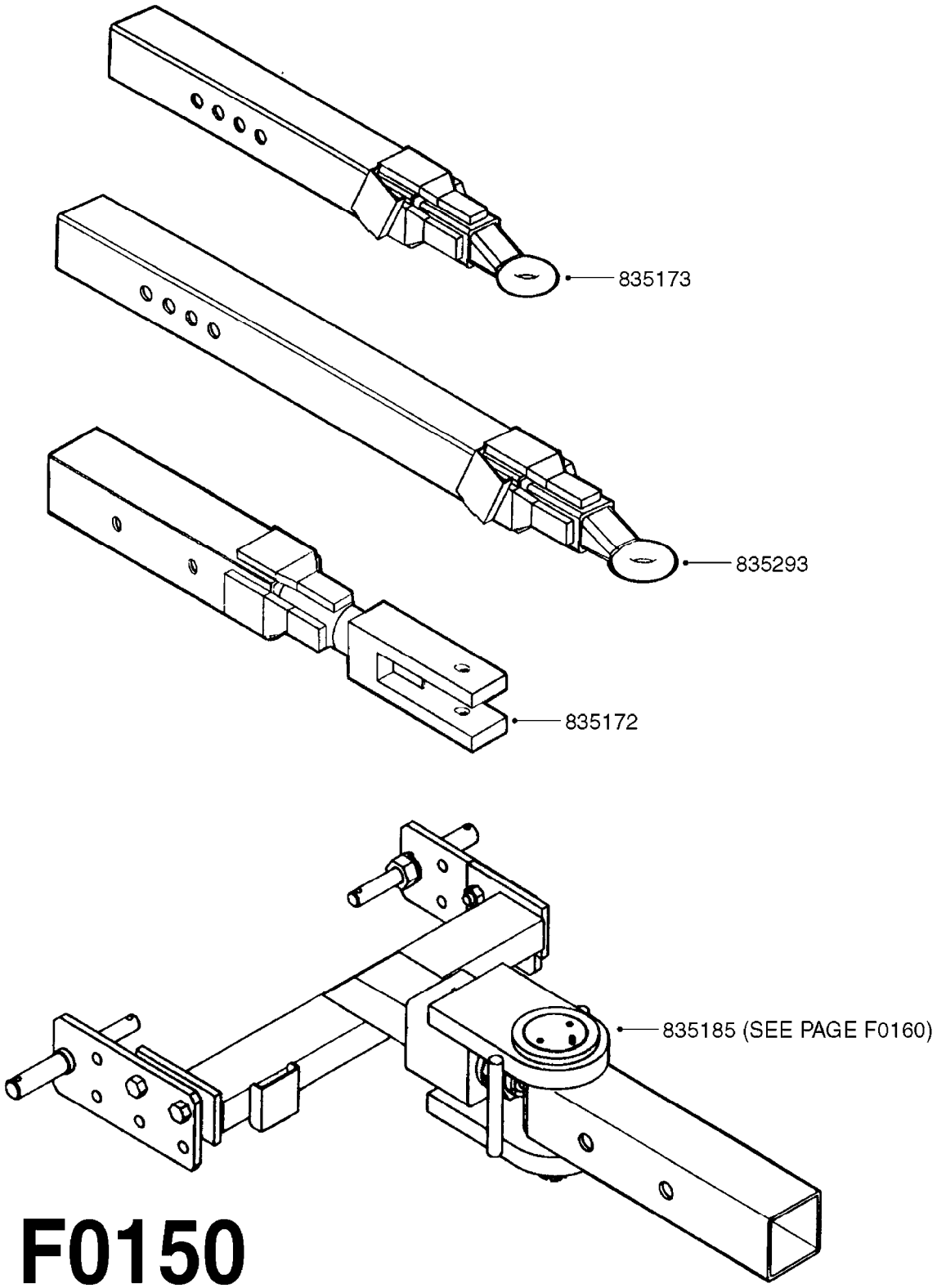

F0150

Agroparts: www.HARDI-INTERNATIONAL.com

DRAWBARS - MERCURY/ARROW
F0150-HIN, 01:01:16

Date 12.08.2020 11:40

parts-n°	order qty	description
835172	1	DRAWBAR STD. F.TG BV CR
835173	1	DRAWBAR RING HITCH ARROW
835185	1	DRAWBAR TURNABLE F.TG BV CR
835293	1	DRAWBAR RING HITCH

DRAWBAR - TURNABLE HITCH
F0160-HIN, 01:01:16

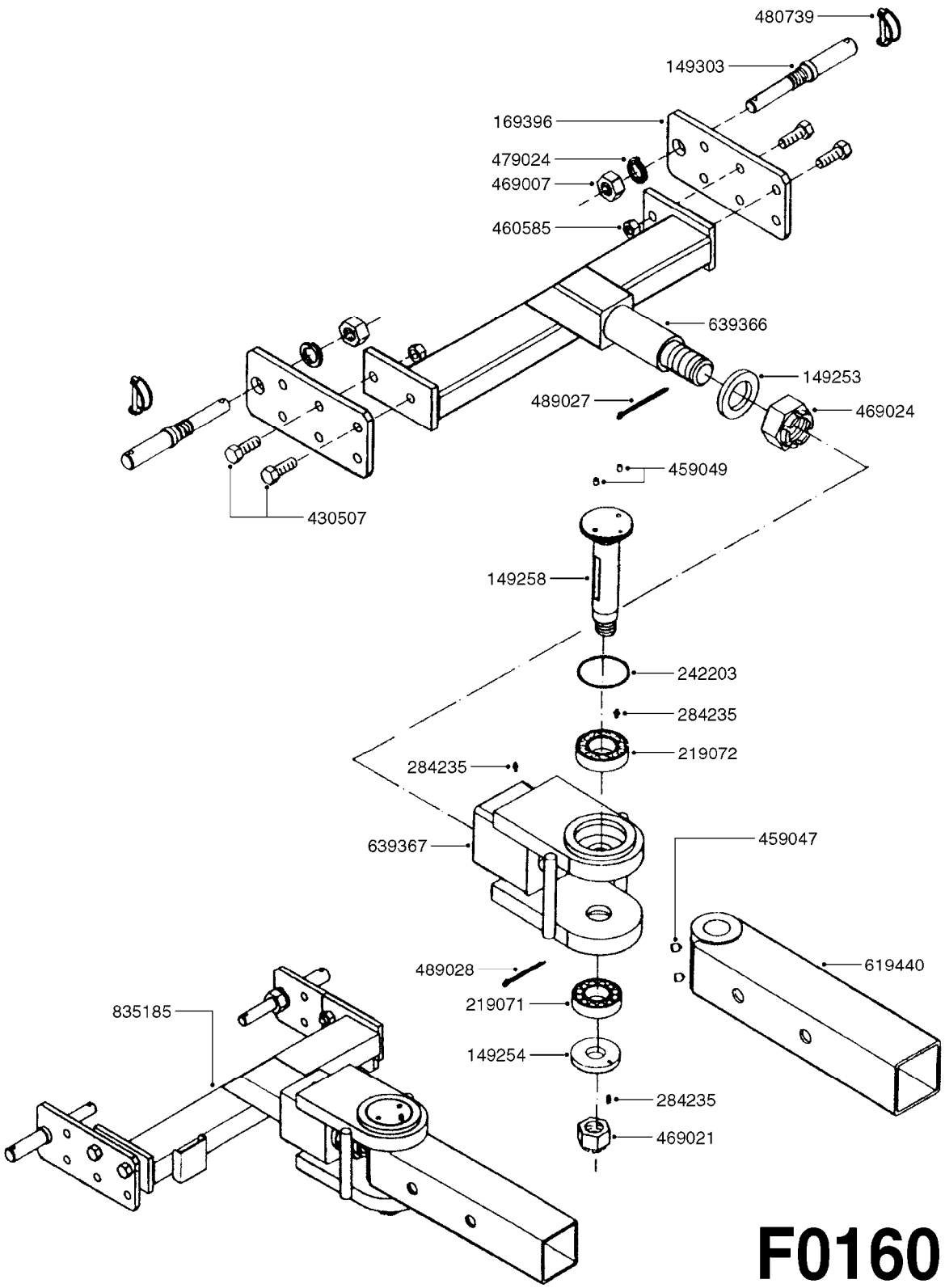

F0160

Agroparts: www.HARDI-INTERNATIONAL.com

DRAWBAR - TURNABLE HITCH
F0160-HIN, 01:01:16

Date 12.08.2020 11:40

parts-n°	order qty	description
149253	1	WASHER D.80X50X10 TURN.HITCH
149254	1	WASHER D.80X32X10 TURN.HITCH
149258	1	PIN F.TURNABLE HITCH
149303	1	DRAW BOLTS
169396	1	PLATE F. TURNABLE DRAWBAR
219071	1	BEARING 30208A TURN.HITCH
219072	1	BEARING
242203	1	O-RING 79.5X72.5
284235	1	ENGRASADOR M-6/100 RECTO
430507	1	BOLT HEX 8.8 DEL M16X45 FT
459047	1	SET SCREW ALLEN M12X25 DIN 913
459049	1	SET SCREW ALLEN M8X10 DIN 913
460585	1	LOCKING NUT M16 DIN985 A2 SS
469007	1	NUT 1" SAE
469021	1	CASTLE NUT 1-1/4"
469024	1	CASTLE NUT 1-3/4" TURN.HITCH
479024	1	WASHER LOCK D.26 DIN 127
480739	1	PIN SNAP D8 F.ROUND
489027	1	ROLL PIN 6 x 100
489028	1	COTTER PIN 6 X 8
619440	1	HEADTUBE FOR TURN.DRAWBAR
639366	1	CENTER BEAM TURN.HITCH
639367	1	CENTER PIVOT - TURN.HITCH
835185	1	DRAWBAR TURNABLE F.TG BV CR

TANK - ZENIT 105/155 MANIFOLD
F0170-HIN, 14:03:19

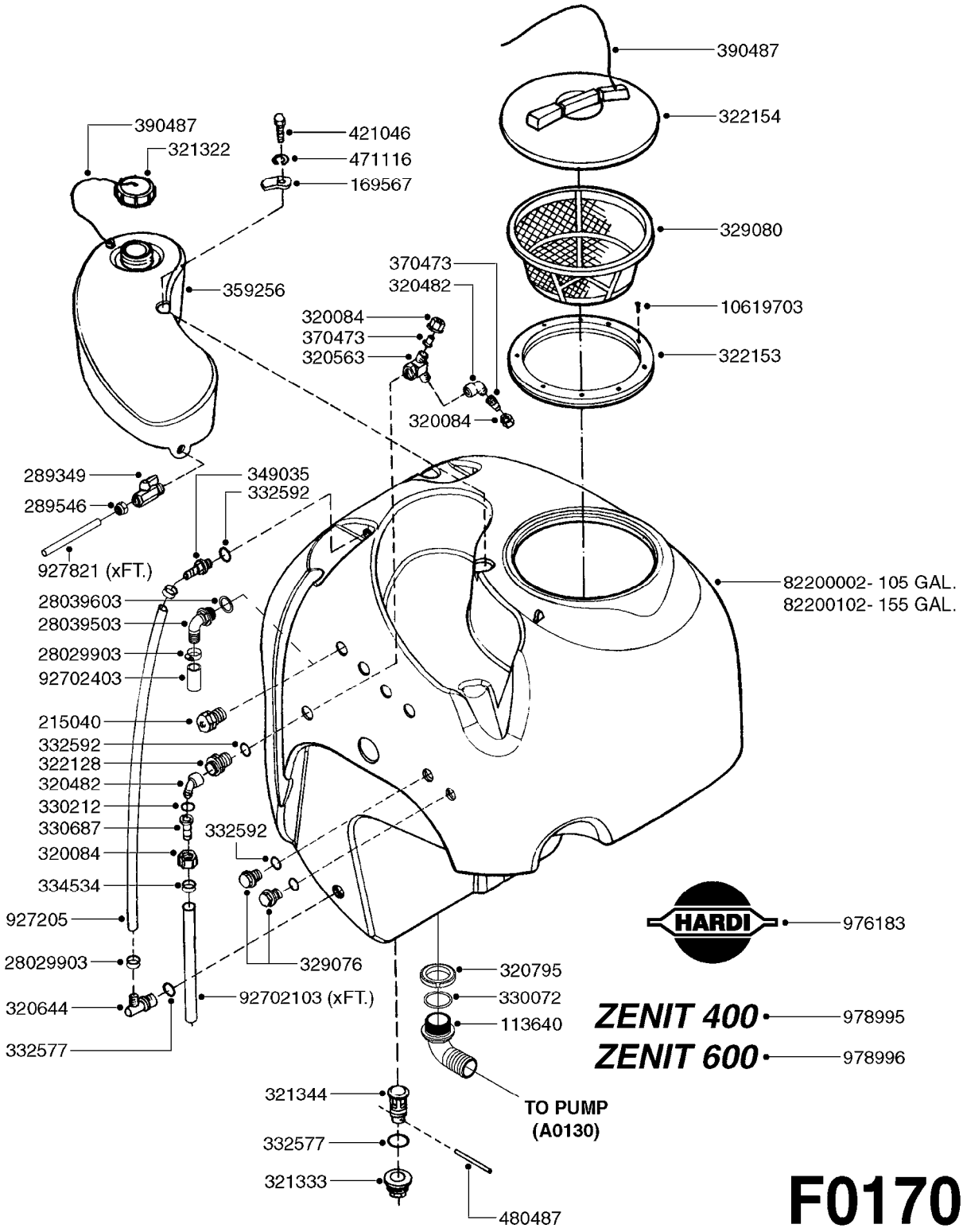

F0170

Agroparts: www.HARDI-INTERNATIONAL.com

TANK - ZENIT 105/155 MANIFOLD
F0170-HIN, 14:03:19

Date 12.08.2020 11:40

parts-n°	order qty	description
113640	1	HOSEBARB, BSP, 1-1/2" 90°
169567	1	BRACKET F.15 L TANK ZENIT
215040	1	PLUG M 1"
289349	1	BALL VALVE 3/8" M-H
289546	1	NUT F.NOZZLE HOLDER ZENIT
320084	1	FITT.DK NUT 1/2" BSP
320482	1	FITT.DK ELB. 1/2" BSP 60 DEG.
320563	1	FITT.DK 3 WAY 1/2" 110 DEG.
320644	1	FITT.DK ELB.3/4"HB X 1" BSP
320795	1	FITT.DK NUT 1-1/2" BSP JAMB
321322	1	SCREW CAP F. S80 X 4
321333	1	FITT.DK BULK 1-1/2" X 1"F BSP
321344	1	DRAIN SCREW 1" BSP RED
322128	1	NIPPLE 1/2"
322153	1	FILTER CASING 170
322154	1	SCREW COVER D355
329076	1	PLUG 1/2" M.
329080	1	FILTER BASKET 12"
330072	1	O-RING D53.5/D45.5X4
330212	1	O-RING D19/D14X2.4 F.1/2"NUT
330687	1	FITT.DK HB 1/2" F. 1/2" NUT
332577	1	O-RING D38/D30X4 F.1" PUR.
332592	1	O-RING D26/D20X3
334534	1	CLAMP HOSE PLASTIC 1/2"
349035	1	FITTING STRAIGHT 1/2" D20
359256	1	CLEAN WATER TANK 4 GAL. ZENIT
370473	1	NOZZLE INJECTOR 5066-2.0
390487	1	CORD NYLON/SIGHT GAUGE 4500mm
421046	1	BOLT HEX M8X25/25 A2 SS DIN933
471116	1	WASHER D8 TENSION
480487	1	PIN M5X60 SLOTTED GALV
927205	1	HOSE R X CLEAR X 3/4 X 0012"
927821	1	CLEAR HOSE D12X10 PA1012
976183	1	DECAL COMPANY D.18,2 X 29,6
978995	1	DECAL "ZENIT 400"
978996	1	DECAL "ZENIT 600"
10619703	1	SCREW SS #6x3/4' SELF TAPPING
28029903	1	CLAMP HOSE GEAR P3/4"-S1" 6712
28039503	1	FITTING, 1" BSP 1" BARB 90°
28039603	1	GASKET F. 1" BSP FITTING
82200002	1	TANK 105 GALLON ZENIT 400L
82200102	1	TANK 155 GALLON ZENIT 600L
92702103	1	HOSE R X1/2" X300PSI WP X0012"
92702403	1	HOSE PVC SUCT GRAY 1"

TANK - ZENIT 105/155 BK
F0180-HIN, 14:03:19

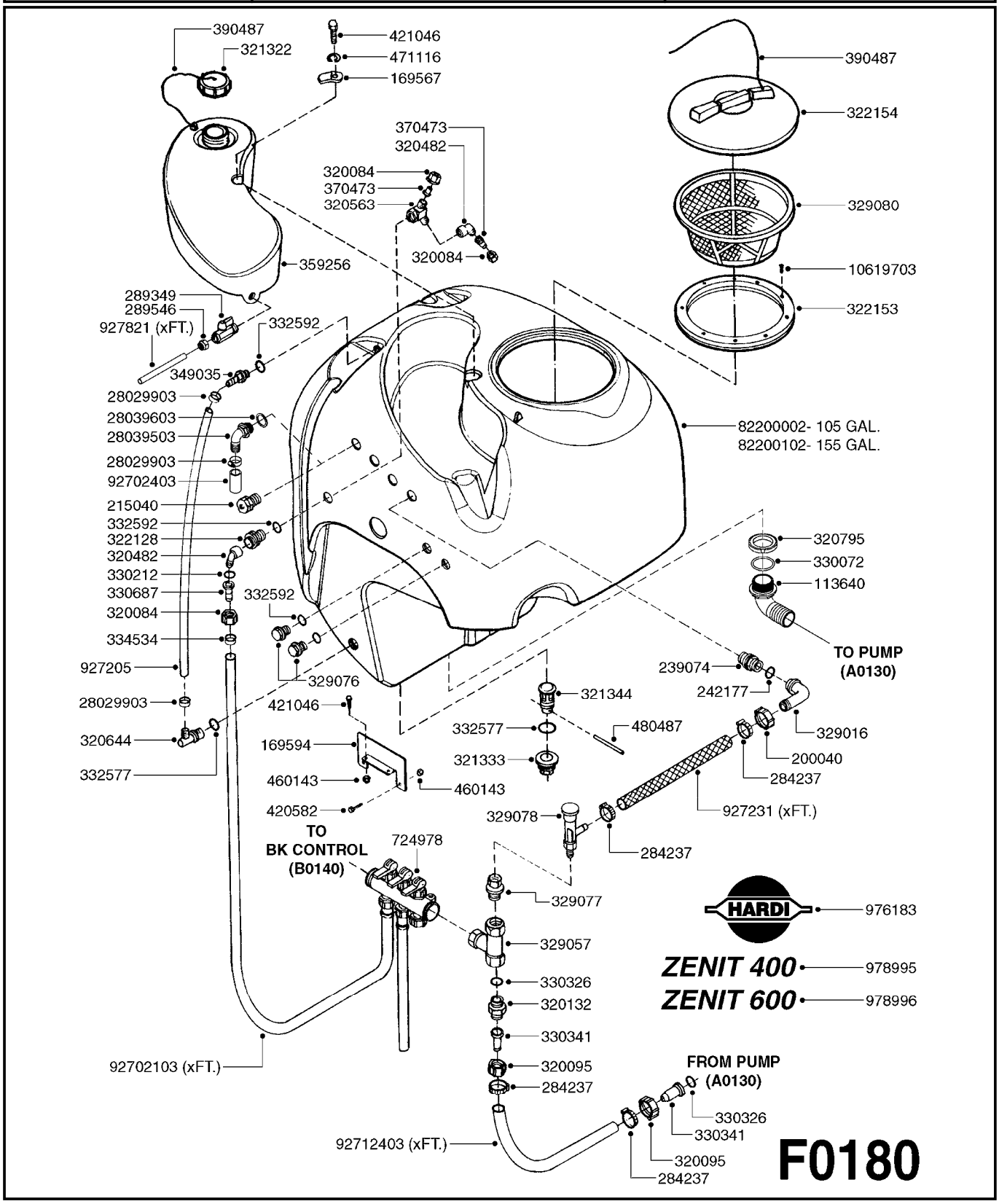

Agroparts: www.HARDI-INTERNATIONAL.com

TANK - ZENIT 105/155 BK
F0180-HIN, 14:03:19

Date 12.08.2020 11:40

parts-n°	order qty	description
113640	1	HOSEBARB, BSP, 1-1/2" 90°
169567	1	BRACKET F.15 L TANK ZENIT
169594	1	BRACKET F.DISTRIB.VALVE ZENIT
200040	1	FITT. ARAG 1"
215040	1	PLUG M 1"
239074	1	BRYSTNIPPEL 1'X3/4'
242177	1	O-RING D25.4 X 20.2 X 2.6
284237	1	CLAMP HOSE GEAR D20/30
289349	1	BALL VALVE 3/8" M-H
289546	1	NUT F.NOZZLE HOLDER ZENIT
320084	1	FITT.DK NUT 1/2" BSP
320095	1	FITT.DK NUT 1" BSP
320132	1	FITT.DK HN 1" BSP
320482	1	FITT.DK ELB. 1/2" BSP 60 DEG.
320563	1	FITT.DK 3 WAY 1/2" 110 DEG.
320644	1	FITT.DK ELB.3/4"HB X 1" BSP
320795	1	FITT.DK NUT 1-1/2" BSP JAMB
321322	1	SCREW CAP F. S80 X 4
321333	1	FITT.DK BULK 1-1/2" X 1"F BSP
321344	1	DRAIN SCREW 1" BSP RED
322128	1	NIPPLE 1/2"
322153	1	FILTER CASING 170
322154	1	SCREW COVER D355
329016	1	BØJNING
329057	1	FITTING TEE 1" F-F-F
329076	1	PLUG 1/2" M.
329077	1	REDUCCION 1"M-1/2"H ARAG (2452042)
329078	1	SAFETY VALVE 290 PSI
329080	1	FILTER BASKET 12"
330072	1	O-RING D53.5/D45.5X4
330212	1	O-RING D19/D14X2.4 F.1/2"NUT
330326	1	O-RING D30/D24X2 F.1"NUT
330341	1	FITT.DK HB 1" F. 1" NUT
330687	1	FITT.DK HB 1/2" F. 1/2" NUT
332577	1	O-RING D38/D30X4 F.1" PUR.
332592	1	O-RING D26/D20X3
334534	1	CLAMP HOSE PLASTIC 1/2"
349035	1	FITTING STRAIGHT 1/2" D20
359256	1	CLEAN WATER TANK 4 GAL. ZENIT
370473	1	NOZZLE INJECTOR 5066-2.0
390487	1	CORD NYLON/SIGHT GAUGE 4500mm
420582	1	BOLT HEX 8.8 DEL M8X20 FT A2
421046	1	BOLT HEX M8X25/25 A2 SS DIN933
460143	1	LOCK NUT M8 SST A2 DIN985
471116	1	WASHER D8 TENSION
480487	1	PIN M5X60 SLOTTED GALV
724978	1	1/2" DISTRIBUTOR TYP.3
927205	1	HOSE R X CLEAR X 3/4 X 0012"
927231	1	HOSE R X PVCX3/4 CLR/BRD 0012"
927821	1	CLEAR HOSE D12X10 PA1012
976183	1	DECAL COMPANY D.18,2 X 29,6
978995	1	DECAL "ZENIT 400"
978996	1	DECAL "ZENIT 600"
10619703	1	SCREW SS #6x3/4' SELF TAPPING
28029903	1	CLAMP HOSE GEAR P3/4"-S1" 6712
28039503	1	FITTING, 1" BSP
		1" BARB 90°
28039603	1	GASKET F. 1" BSP FITTING
82200002	1	TANK 105 GALLON ZENIT 400L
82200102	1	TANK 155 GALLON ZENIT 600L
92702103	1	HOSE R X1/2" X300PSI WP X0012"

parts-n°	order qty	description
92702403	1	HOSE PVC SUCT GRAY 1"
92712403	1	HOSE R X1" X300PSI WP X0012"

FRAME - ZENIT 105/155 PNEUM.
F0190-HIN, 01:01:16

Date 12.08.2020 11:40

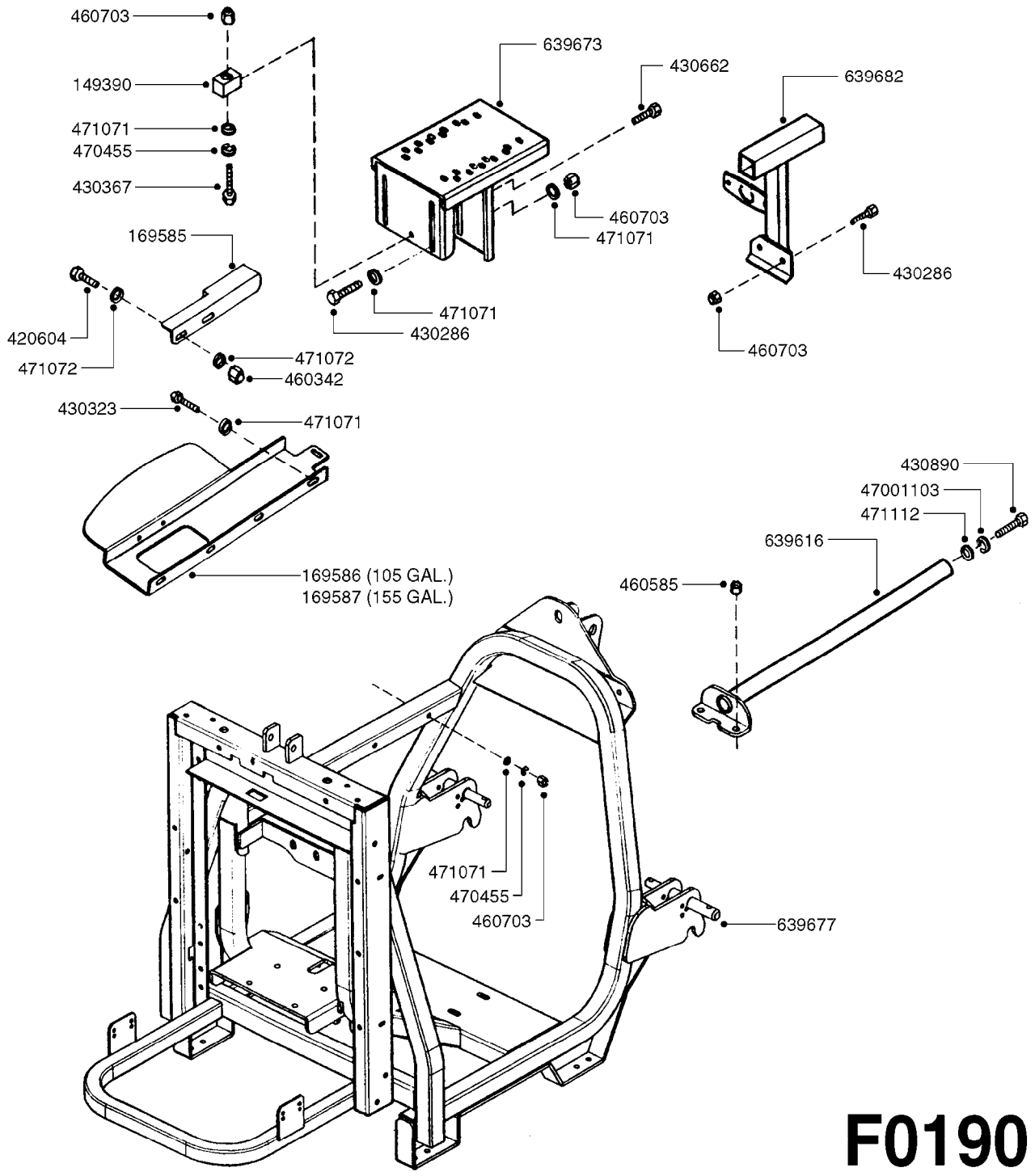

F0190

Agroparts: www.HARDI-INTERNATIONAL.com

FRAME - ZENIT 105/155 PNEUM.
F0190-HIN, 01:01:16

Date 12.08.2020 11:40

parts-n°	order qty	description
149390	1	PUMP MT.TENSIONER ZENIT
169585	1	BRACKET F.TANK FIXING ZENIT
169586	1	BRACKET F.TANK ZENIT 105
169587	1	BRACKET F.TANK ZENIT 155
420604	1	BOLT HEX 8.8 DEL M10X25 FT DIN933
430286	1	BOLT HEX 8.8 DEL M12X30 FT
430323	1	BOLT HEX 8.8 DEL M12X60
430367	1	BOLT HEX 8.8 DEL M12X100 DIN931
430662	1	BOLT HEX 8.8 DEL M12X20 FT
430890	1	BOLT HEX 8.8 DEL M20X50
460342	1	NUT HEX M10 DEL DIN934
460585	1	LOCKING NUT M16 DIN985 A2 SS
460703	1	NUT HEX M12X1.75 LOCK DIN985A2 SS
470455	1	WASHER D12 SPRING
471071	1	WASHER M12 GALV
471072	1	WASHER M10 EL2
471112	1	WASHER D20
639616	1	FRAME SUPPORT BRACKET - ZENIT
639673	1	PUMP MT.BRKT. ZENIT
639677	1	FRAME F.ZENIT 105/155 PNEUM.
639682	1	CONTROL MT.BRACKET ZENIT
47001103	1	WASHER D20.5/D33X4 LOCK

FRAME - ZENIT 105/155 AXIAL
F0200-HIN, 01:01:16

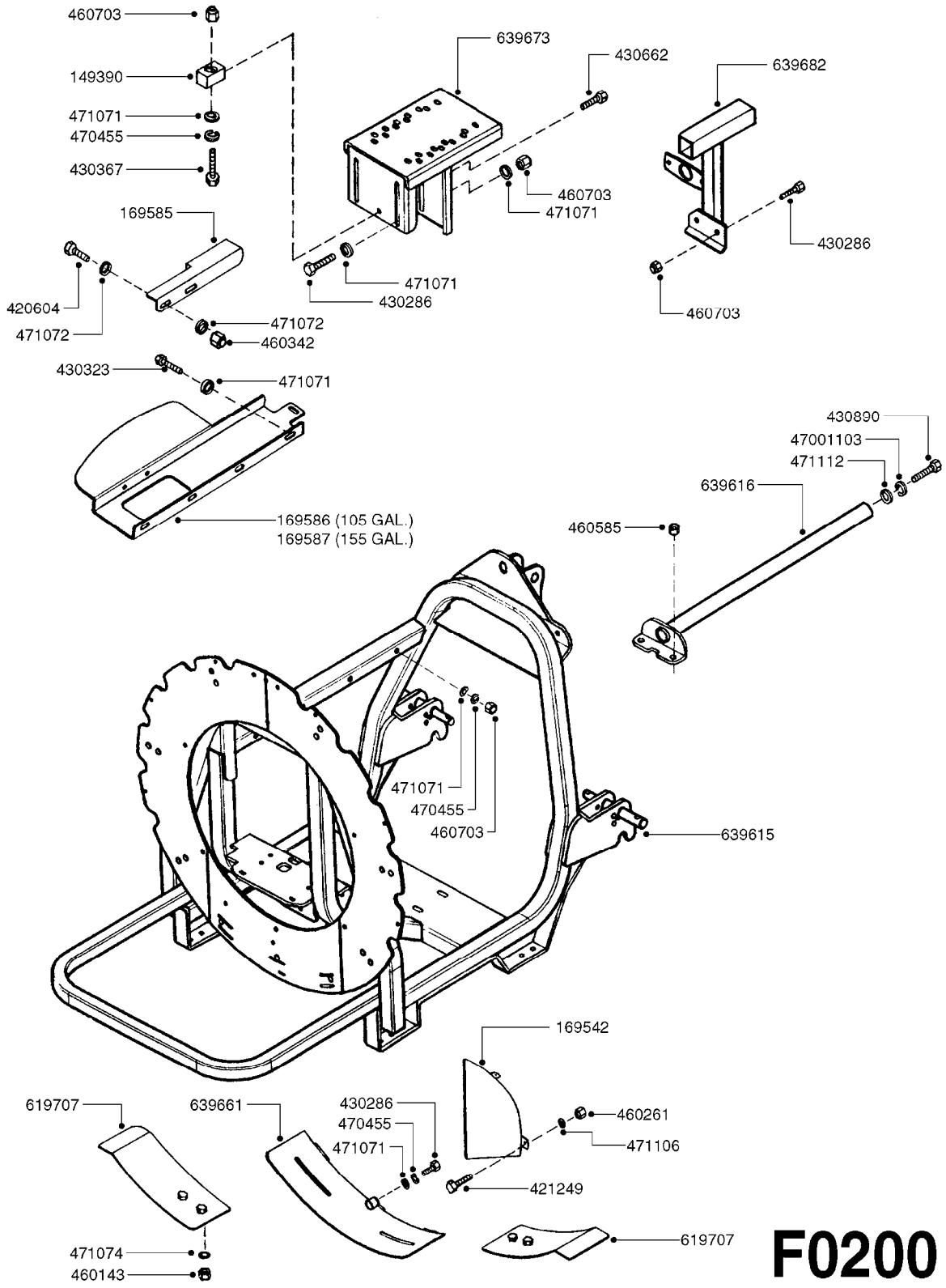

F0200

Agroparts: www.HARDI-INTERNATIONAL.com

FRAME - ZENIT 105/155 AXIAL
F0200-HIN, 01:01:16

Date 12.08.2020 11:40

parts-n°	order qty	description
149390	1	PUMP MT.TENSIONER ZENIT
169542	1	AIR PLATE ZENIT
169585	1	BRACKET F.TANK FIXING ZENIT
169586	1	BRACKET F.TANK ZENIT 105
169587	1	BRACKET F.TANK ZENIT 155
420604	1	BOLT HEX 8.8 DEL M10X25 FT DIN933
421249	1	BOLT HEX M6X15
430286	1	BOLT HEX 8.8 DEL M12X30 FT
430323	1	BOLT HEX 8.8 DEL M12X60
430367	1	BOLT HEX 8.8 DEL M12X100 DIN931
430662	1	BOLT HEX 8.8 DEL M12X20 FT
430890	1	BOLT HEX 8.8 DEL M20X50
460143	1	LOCK NUT M8 SST A2 DIN985
460261	1	NUT HEX M6X1.00 LOCK DIN985 A2 SS
460342	1	NUT HEX M10 DEL DIN934
460585	1	LOCKING NUT M16 DIN985 A2 SS
460703	1	NUT HEX M12X1.75 LOCK DIN985A2 SS
470455	1	WASHER D12 SPRING
471071	1	WASHER M12 GALV
471072	1	WASHER M10 EL2
471074	1	WASHER M8 ELZ
471106	1	WASHER D6
471112	1	WASHER D20
619707	1	LOWER FAN HOUSING WING ADJ.
639615	1	FRAME F.ZENIT 105/155 AXIAL
639616	1	FRAME SUPPORT BRACKET - ZENIT
639661	1	LOWER PLATE FAN HOUSING ZENIT
639673	1	PUMP MT.BRKT. ZENIT
639682	1	CONTROL MT.BRACKET ZENIT
47001103	1	WASHER D20.5/D33X4 LOCK

Section G

Blower Unit
Mistblower

main group	page-n°	date	description
Blower unit mistblowers			
	G0010-HIN	10:01:19	LB - BLOWER
	G0020-HIN	01:01:16	LB - BLOWER FAN & HUB
	G0030-HIN	01:01:16	LE - GEAR BOX
	G0040-HIN	01:01:16	LE - BLOWER
	G0050-HIN	01:01:16	LE - BLOWER FAN
	G0060-HIN	01:01:16	LE - REAR FRAME - 100/150
	G0070-HIN	01:01:16	LE-SPV - GEAR BOX
	G0080-HIN	01:01:16	LE-SPV - BLOWER
	G0090-HIN	01:01:16	TANGO - SPV 16" MAXI FAN
	G0100-HIN	01:01:16	TANGO - SPV DOUBLE16" MAXI FAN
	G0110-HIN	01:01:16	CONDOR - 32" FAN
	G0120-HIN	01:01:16	LP - GEAR BOX
	G0130-HIN	01:01:16	LP - BLOWER
	G0140-HIN	01:01:16	LP - BLOWER FAN
	G0150-HIN	01:01:16	LP - FRAME F. OUTLETS
	G0160-HIN	01:01:16	LP - CANNON BLOWER AND FRAME
	G0170-HIN	01:01:16	CANNON "L" SPOUT ASSEMBLY
	G0180-HIN	01:01:16	LB/LP-SINGLE & DOUBLE NOZZLES
	G0190-HIN	01:01:16	ARROW - 30" AXIAL FAN
	G0200-HIN	01:01:16	ARROW - GEAR BOX/FAN 30"BLOWER
	G0210-HIN	01:01:16	ARROW - 30" BLOWER
	G0220-HIN	01:01:16	ARROW/BRAVO SPV 22" BLOWER
	G0230-HIN	01:01:16	ARROW - SPV 16" MAXI BLOWER
	G0240-HIN	01:01:16	ARROW - SPV 16" MAXI FAN/GRBX
	G0250-HIN	01:01:16	MERCURY - 36" AXIAL FAN
	G0260-HIN	01:01:16	MERCURY - 36" AXIAL FAN '05
	G0270-HIN	01:01:16	MERCURY - 36" AXIAL GEARBOX
	G0280-HIN	01:01:16	MERCURY - 32" AXIAL FAN
	G0290-HIN	01:01:16	MERCURY - 32" AXIAL FAN '05
	G0300-HIN	01:01:16	MERCURY - 26" DOUBLE CENT.GRBX
	G0310-HIN	01:01:16	MERCURY - 26" DOUBLE BLOWER
	G0320-HIN	01:01:16	MERCURY - 26" DOUBLE CENT.FAN
	G0330-HIN	01:01:16	NOZZLES - AXIAL JET 1/4 X 1
	G0340-HIN	01:01:16	NOZZLES - AXIAL JET 1/4 X 2
	G0350-HIN	01:01:16	NOZZLES - AXIAL JET STAINLESS
	G0360-HIN	01:01:16	NOZZLES - SINGLE & DOUBLE JETS
	G0370-HIN	01:01:16	LP - PNEUMATIC OUTLETS
	G0380-HIN	01:01:16	PNEUMATIC AIR SPOUTS 2 OUTLETS
	G0390-HIN	01:01:16	PNEUMATIC AIR SPOUTS 4 OUTLETS
	G0400-HIN	01:01:16	HYDROPNEUM. SPOUTS 3 OUTLETS
	G0410-HIN	01:01:16	HYDROPNEUM. SPOUTS 5 OUTLETS
	G0420-HIN	01:01:16	TUBES & HOSES
	G0430-HIN	01:01:16	ZENIT - GEARBOX F.AXIAL FAN
	G0440-HIN	01:01:16	ZENIT - 32" AXIAL FAN
	G0450-HIN	01:01:16	ZENIT BLOWER
	G0460-HIN	01:01:16	ZENIT BLOWER FAN
	G0470-HIN	01:01:16	ZENIT GEAR BOX
	G0480-HIN	01:01:16	ZENIT - 32" AXIAL FAN

LB - BLOWER
G0010-HIN, 10:01:19

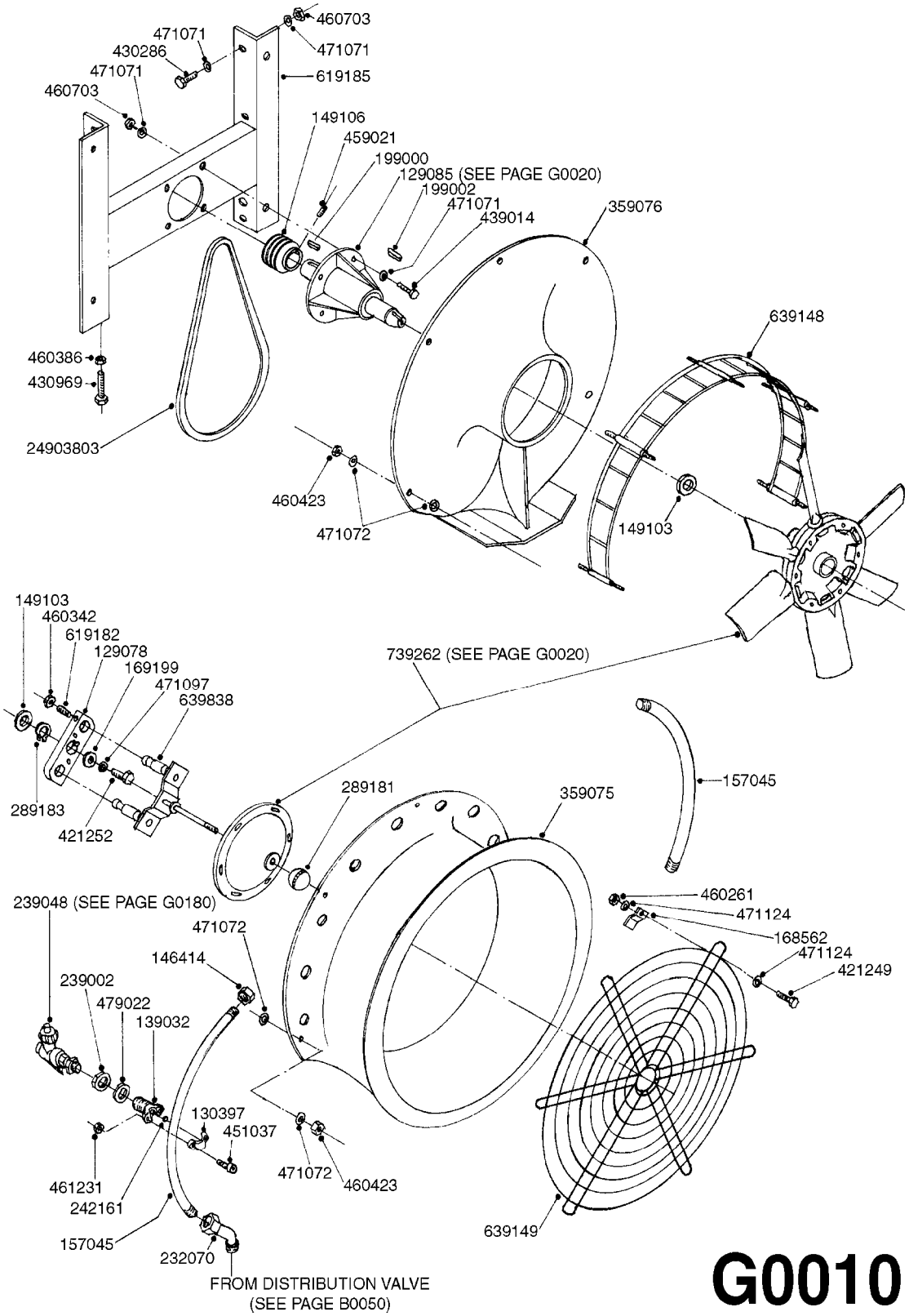

G0010

Agroparts: www.HARDI-INTERNATIONAL.com

LB - BLOWER
G0010-HIN, 10:01:19

Date 12.08.2020 11:41

parts-n°	order qty	description
129078	1	CLUTCH F.22" FAN
129085	1	HUB FOR BLOWER LB550
130397	1	NOZZLE HOLDER UPPER PART
139032	1	JET BODY LB - ARAG
146414	1	TERMINATION STOPPER 22 X 100
149103	1	WASHER D50D30X5 BROZ.FRICTION
149106	1	PULLEY D90/3
157045	1	BLOWER SPR. LINE ST. LB-550
168562	1	BRACKET F.FAN GRILL TWIN
169199	1	WASHER D40D10X4
199000	1	KEY 50X8X7
199002	1	KEY 20X8X7
232070	1	ELBOW 1/2" BRASS M-22.100 H
239002	1	NUT 1/2" BSP BRASS F.BULKHEAD
239048	1	NOZZLE BODY F.LB W/O NON DRIP
242161	1	O-RING 6 X 3.0
289181	1	BALL (BAKELITE)
289183	1	SNAP-RING OUTER 28X15
359075	1	FAN HOUSING LB 22"
359076	1	CONE LB50
421249	1	BOLT HEX M6X15
421252	1	SCREW M10X30 CAP
430286	1	BOLT HEX 8.8 DEL M12X30 FT
430969	1	SCREW M12X60 CAP
439014	1	BOLT HEX 8.8 DEL M12X35
451037	1	SCREW M6X20 HEX
459021	1	DOWEL ALLEN M8X20
460261	1	NUT HEX M6X1.00 LOCK DIN985 A2 SS
460342	1	NUT HEX M10 DEL DIN934
460386	1	NUT HEX M12X1.75
460423	1	NUT HEX M10X1.50 LOCK DIN985A2 SS
460703	1	NUT HEX M12X1.75 LOCK DIN985A2 SS
461231	1	NUT HEX M6 BRASS
471071	1	WASHER M12 GALV
471072	1	WASHER M10 EL2
471097	1	WASHER D10 SAFETY
471124	1	WASHER, M6, Ø18/ 6.4X 1.6, SS
479022	1	WASHER D.22 GALV.
619182	1	BOLT F.CLUTCH (ELASTIC) LB
619185	1	LB-BLOWER BRACKET
639148	1	SAFETY GRILL AIR OUTLET
639149	1	AIR INTAKE GRILL
639838	1	CLUTCH BRACKET F.22" FAN
739262	1	FAN D22"
24903803	1	VEE BELT SPZ 1400

LB - BLOWER FAN & HUB
G0020-HIN, 01:01:16

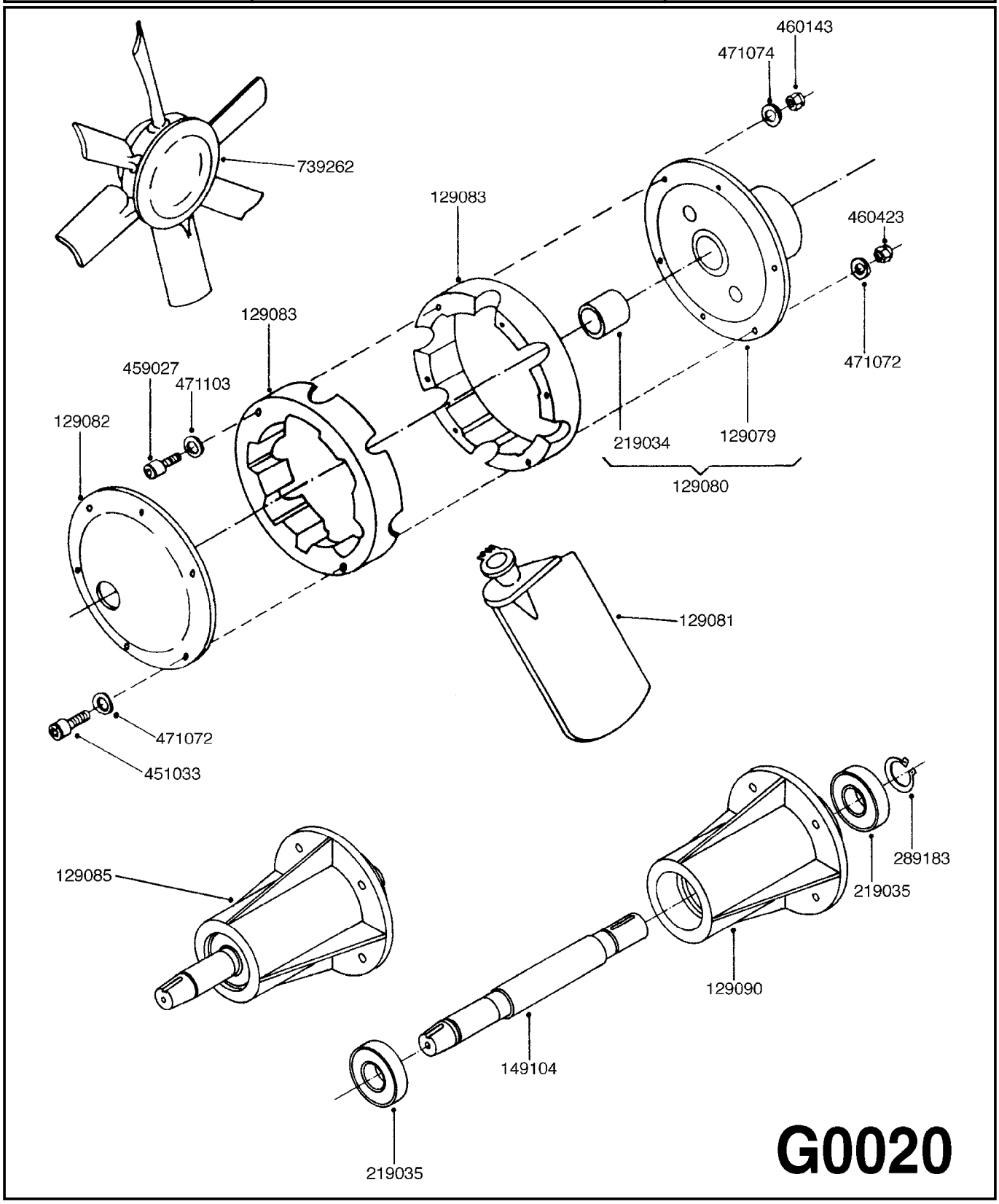

Agroparts: www.HARDI-INTERNATIONAL.com

LB - BLOWER FAN & HUB
G0020-HIN, 01:01:16

Date 12.08.2020 11:41

parts-n°	order qty	description
129079	1	DISC F/F550, CASTING
129080	1	CENTER F.22" FAN
129081	1	BLADE F.22" FAN
129082	1	CENTER FOR BLOWER 550/650
129083	1	BLOWER HOOP F.22" FAN
129085	1	HUB FOR BLOWER LB550
129090	1	BUSHING F.22' FAN
149104	1	AXLE FOR LB HUB
219034	1	BALL BEARING SELF GRE.30/40/50
219035	1	BALL BEARING 6306 2RS
289183	1	SNAP-RING OUTER 28X15
451033	1	SCREW M8X25 HEX
459027	1	BOLT D8X80 ALLEN HEAD
460143	1	LOCK NUT M8 SST A2 DIN985
460423	1	NUT HEX M10X1.50 LOCK DIN985A2 SS
471072	1	WASHER M10 EL2
471074	1	WASHER M8 ELZ
471103	1	WASHER D8 BRASS
739262	1	FAN D22"

LE - GEAR BOX
G0030-HIN, 01:01:16

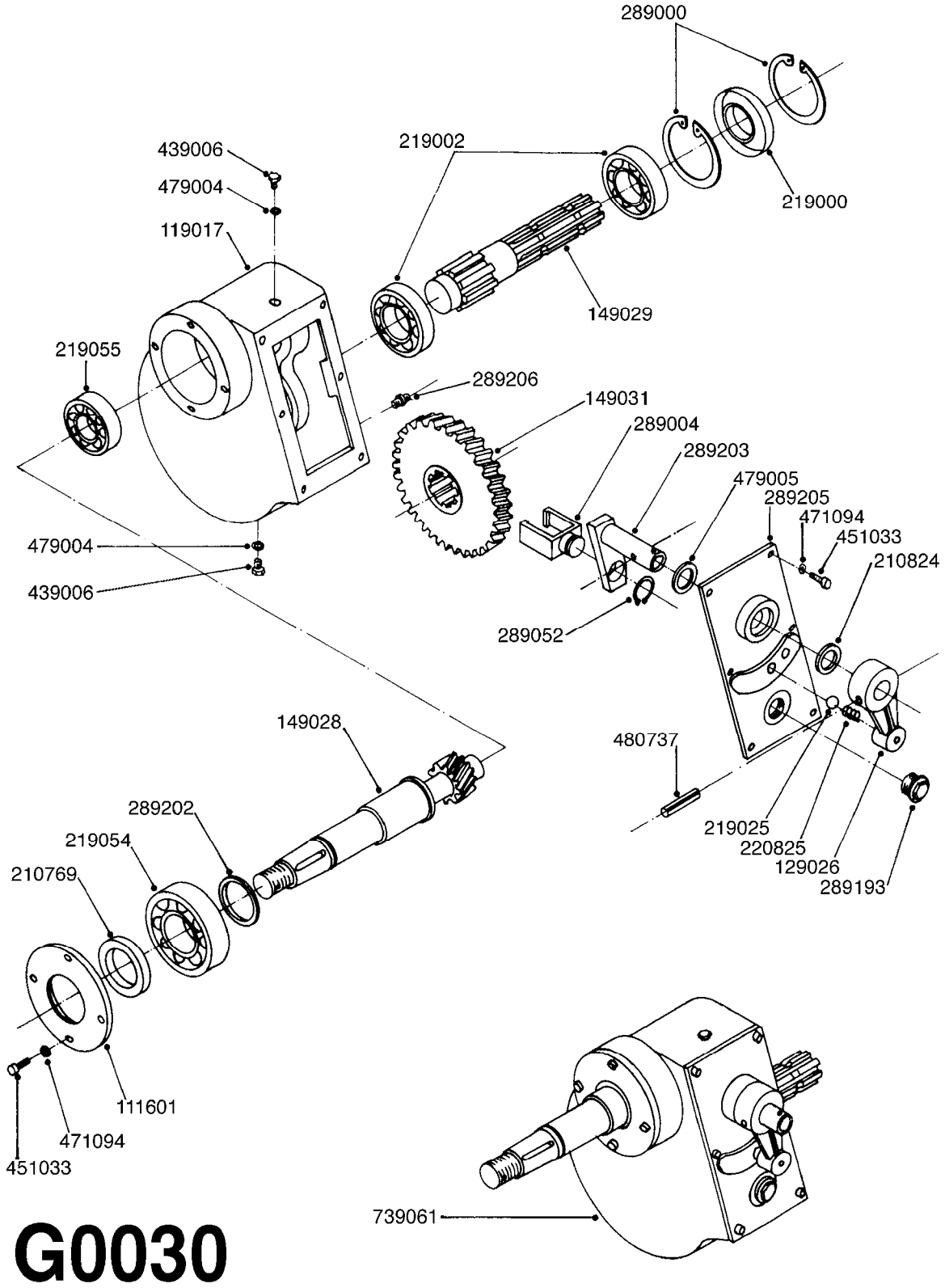

G0030

Agroparts: www.HARDI-INTERNATIONAL.com

LE - GEAR BOX
G0030-HIN, 01:01:16

Date 12.08.2020 11:41

parts-n°	order qty	description
111601	1	FLANGE F/GEAR BOX SLOW
119017	1	GEARBOX CASE
129026	1	LEVER FOR ARM
149028	1	SHAFT OUTPUT F.GEARBOX LE
149029	1	AXLE SHAFT
149031	1	GEAR
210769	1	SEAL OIL 62 X 40 X 10
210824	1	SEAL OIL 18 X 7
219000	1	OIL SEAL 35 X 72 X 10
219002	1	BEARING 6207
219025	1	BALL D15 STAINLESS
219054	1	BALL BEARING 32208
219055	1	BALL BEARING 30305
220825	1	SPRING F.GEAR CHANGE
289000	1	SNAP-RING INNER
289004	1	SHIFT HEAD 814 2"
289052	1	SNAP-RING E-18
289193	1	OIL LEVEL GLASS
289202	1	SPACER
289203	1	LINKAGE
289205	1	SIDE COVER
289206	1	FASTNER
439006	1	PLUG F.OIL HOLE GEARBOX F.LE
451033	1	SCREW M8X25 HEX
471094	1	WASHER D8,4 STAR
479004	1	SEAL F.OIL PLUG GEARBOX LE
479005	1	WASHER D18 DIN 6916
480737	1	PIN CLAMP D6X45
739061	1	GEAR BOX F.LE

LE - BLOWER
G0040-HIN, 01:01:16

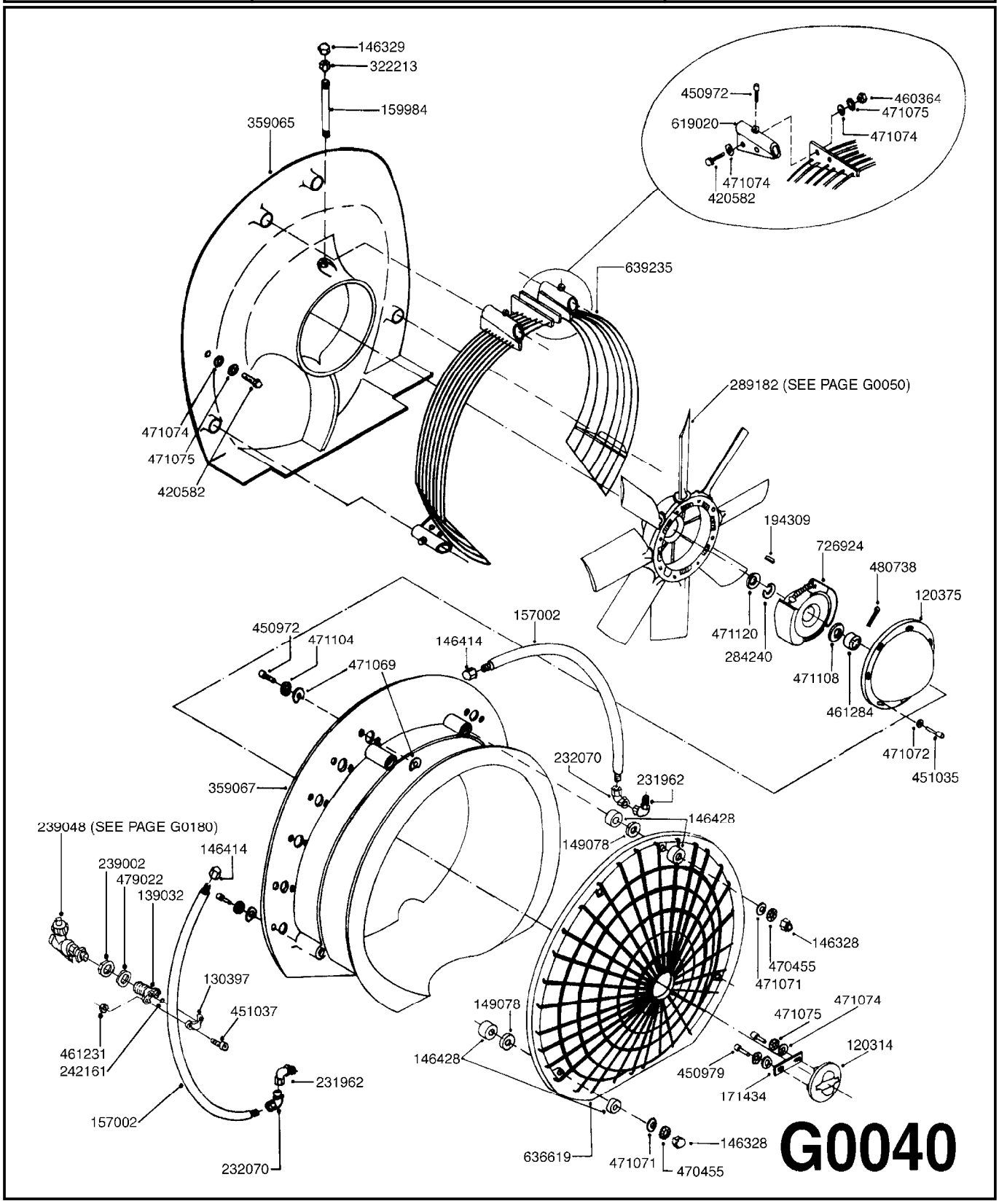

Agroparts: www.HARDI-INTERNATIONAL.com

LE - BLOWER
G0040-HIN, 01:01:16

Date 12.08.2020 11:41

parts-n°	order qty	description
120314	1	PULLEY D350 4C/SPZ
120375	1	CENTER FOR WING
130397	1	NOZZLE HOLDER UPPER PART
139032	1	JET BODY LB - ARAG
146328	1	TOP NUT M12 BRASS
146329	1	END SOCKET 1/2"
146414	1	TERMINATION STOPPER 22 X 100
146428	1	DISTANCE RING D 25 X 5
149078	1	WASHER
157002	1	FEED LINE STAINLESS TE 820
159984	1	OIL TUBE F/GEAR BOX
171434	1	BRACKET FOR HARDI LOGO
194309	1	KEY 8 X 7 X 40
231962	1	ELBOW BRASS 1/2"
232070	1	ELBOW 1/2" BRASS M-22.100 H
239002	1	NUT 1/2" BSP BRASS F.BULKHEAD
239048	1	NOZZLE BODY F.LB W/O NON DRIP
242161	1	O-RING 6 X 3.0
284240	1	SNAP-RING OUTER 35X1.5
289182	1	FAN 750 ALT 739995
322213	1	END SOCKET 1/2"
359065	1	FAN HOUSING CONE 750MM LE
359067	1	FAN HOUSING OUTER 750MM LE
420582	1	BOLT HEX 8.8 DEL M8X20 FT A2
450972	1	SCREW M6X15 ALLEN GALV.
450979	1	SCREW M8X20 HEX
451035	1	SCREW M10X70 HEX
451037	1	SCREW M6X20 HEX
460364	1	NUT HU M8 A2 SS DIN934
461231	1	NUT HEX M6 BRASS
461284	1	NUT HEX M24X2 SLOTTED
470455	1	WASHER D12 SPRING
471069	1	WASHER D6.5D20X1.5 BRASS
471071	1	WASHER M12 GALV
471072	1	WASHER M10 EL2
471074	1	WASHER M8 ELZ
471075	1	WASHER M8 LOCK
471104	1	WASHER D6 STAR
471108	1	WASHER D44D25X4.5
471120	1	WASHER D50,9D35X5
479022	1	WASHER D.22 GALV.
480738	1	PIN D5X40 SPLIT
619020	1	H20830304 FITT. F. GRID D820
636619	1	SAFETY GRATE D740 WITH 4 BRA-
639235	1	FAN SCREEN TOP 750MM LE
726924	1	CENTRIFUGAL CLUTCH D. 150

LE - BLOWER FAN
G0050-HIN, 01:01:16

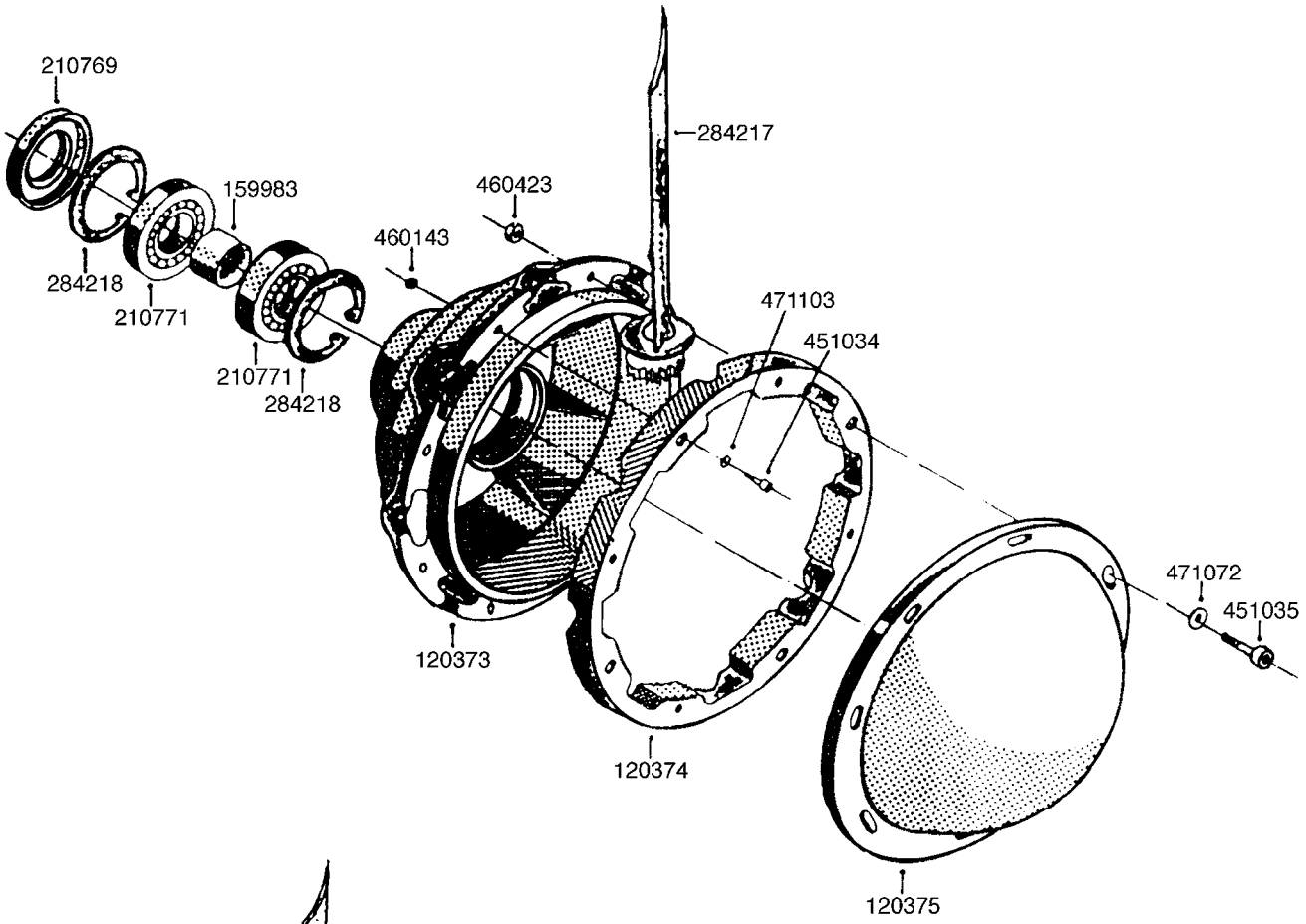

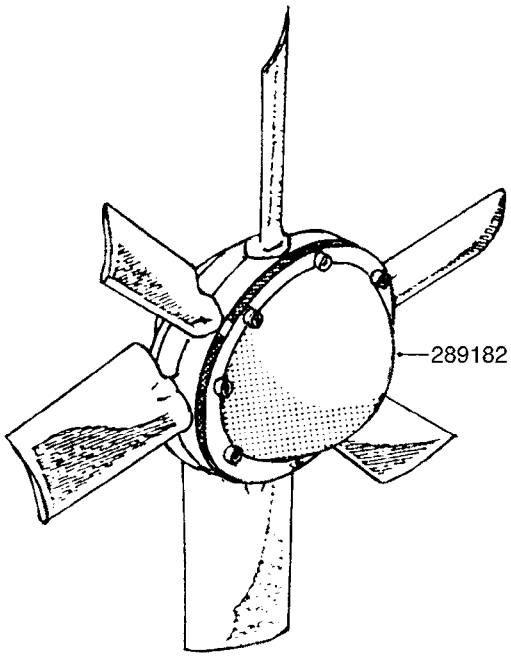

G0050

Agroparts: www.HARDI-INTERNATIONAL.com

LE - BLOWER FAN
G0050-HIN, 01:01:16

Date 12.08.2020 11:41

parts-n°	order qty	description
120373	1	CENTER WHEEL F/D. 750/650
120374	1	FLANGE F/CENTER WHEEL 750/650
120375	1	CENTER FOR WING
159983	1	DISTANCE TUBE
210769	1	SEAL OIL 62 X 40 X 10
210771	1	BALL BEARING 6007 SRS1
284217	1	FAN BLADE F.750 LE
284218	1	SNAP-RING INNER 62X2
289182	1	FAN 750 ALT 739995
451034	1	SCREW M8X50 HEX
451035	1	SCREW M10X70 HEX
460143	1	LOCK NUT M8 SST A2 DIN985
460423	1	NUT HEX M10X1.50 LOCK DIN985A2 SS
471072	1	WASHER M10 EL2
471103	1	WASHER D8 BRASS

LE - REAR FRAME - 100/150
G0060-HIN, 01:01:16

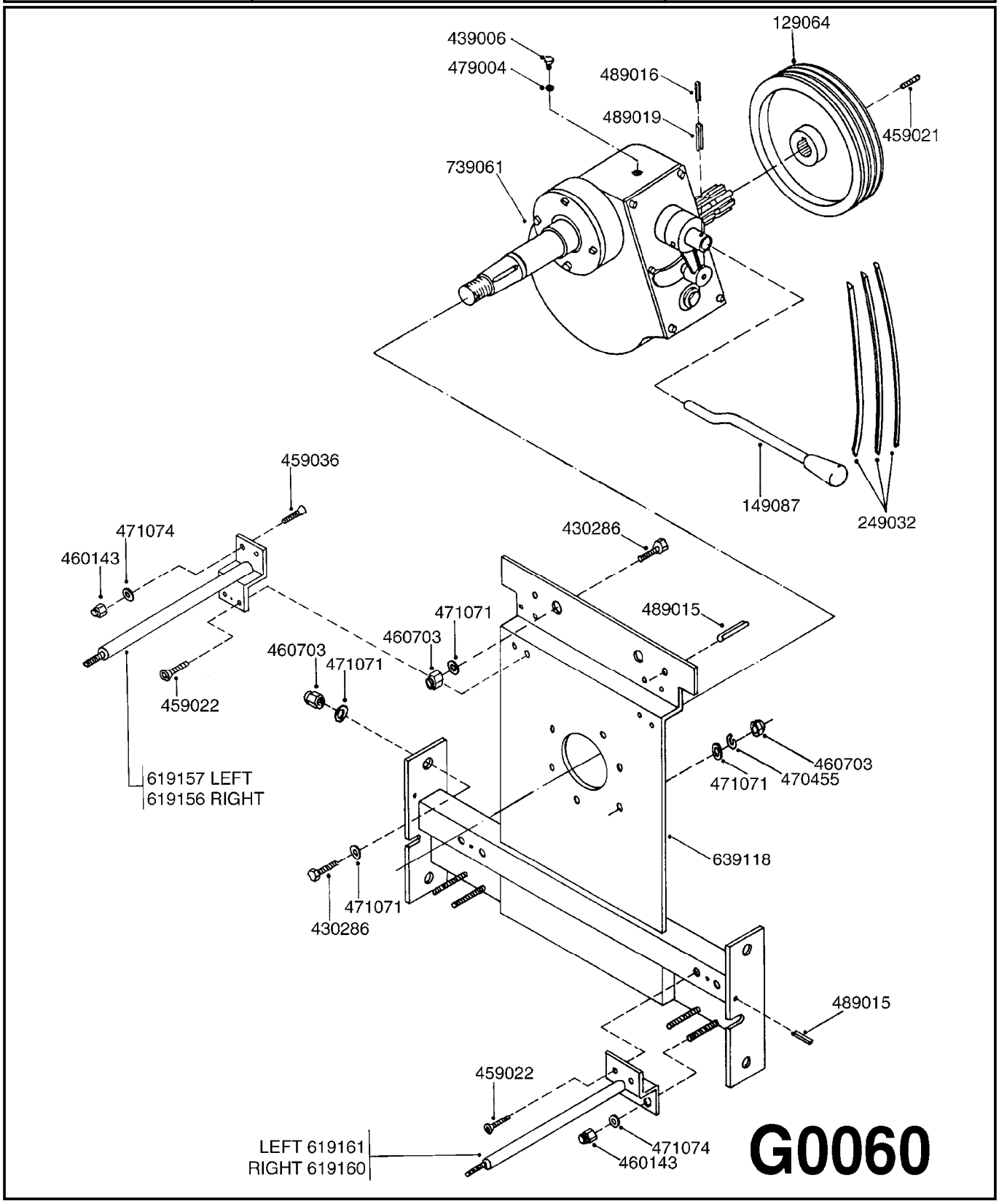

Agroparts: www.HARDI-INTERNATIONAL.com

LE - REAR FRAME - 100/150
G0060-HIN, 01:01:16

Date 12.08.2020 11:41

parts-n°	order qty	description
129064	1	PULLEY D200 GEAR BOX
149087	1	HANDLE LE-650/750
249032	1	VEE BELT SPZ 1120
430286	1	BOLT HEX 8.8 DEL M12X30 FT
439006	1	PLUG F.OIL HOLE GEARBOX F.LE
459021	1	DOWEL ALLEN M8X20
459022	1	M-8 X 20 ALLEN SCREW
459036	1	M-8 X 30 ALLEN SCREW
460143	1	LOCK NUT M8 SST A2 DIN985
460703	1	NUT HEX M12X1.75 LOCK DIN985A2 SS
470455	1	WASHER D12 SPRING
471071	1	WASHER M12 GALV
471074	1	WASHER M8 ELZ
479004	1	SEAL F.OIL PLUG GEARBOX LE
489015	1	SLOTTED PIN D.8X16
489016	1	SLOTTED PIN D.3X20
489019	1	SLOTTED PIN D.5X20
619156	1	TUBE SUP.FAN HOUSING RIGHT
619157	1	TUBE SUP.AFN HOUSING LEFT
619160	1	TUBE SUP.FAN HOUSING RIGHT 750
619161	1	TUBE SUP.FAN HOUSING LEFT 750
639118	1	LE-650 SUPPORT FOR FAN HOUSING
739061	1	GEAR BOX F.LE

LE-SPV - GEAR BOX
G0070-HIN, 01:01:16

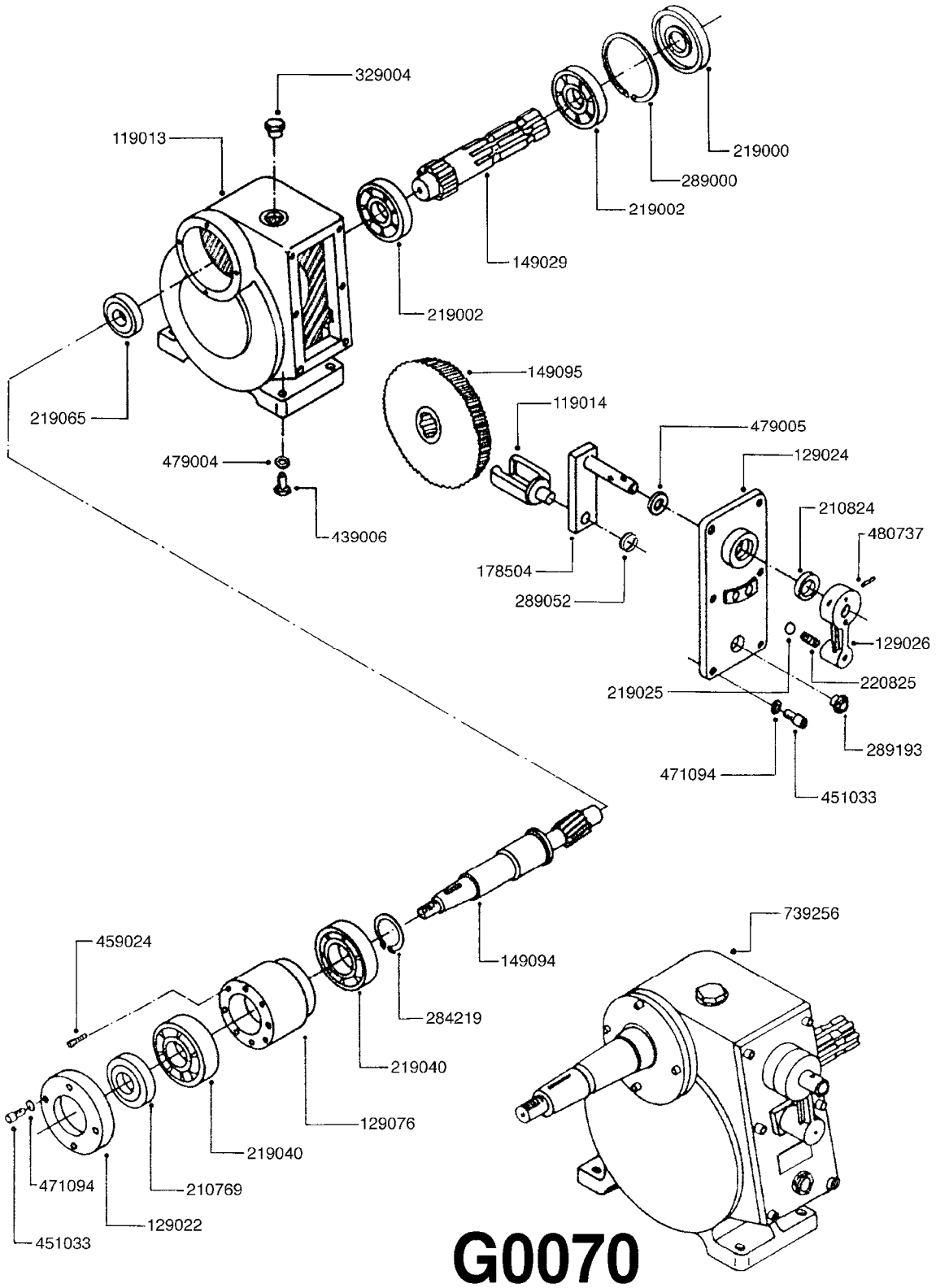

Agroparts: www.HARDI-INTERNATIONAL.com

LE-SPV - GEAR BOX
G0070-HIN, 01:01:16

Date 12.08.2020 11:41

parts-n°	order qty	description
119013	1	GEAR BOX HOUSING 1-V
119014	1	SHIFT HEAD F. 1-GEAR GEAR BOX
129022	1	GEAR BOX LID 1 GEAR TURB.
129024	1	COVER F. 1-GEAR GEAR BOX
129026	1	LEVER FOR ARM
129076	1	SUPPLEMENT FOR AXLE F-400
149029	1	AXLE SHAFT
149094	1	SHAFT OUTPUT F.GEARBOX SPV
149095	1	GEARWHEEL F.MAXI GEAR Z-82 M2
178504	1	ARM FOR 1-GEAR GEAR BOX
210769	1	SEAL OIL 62 X 40 X 10
210824	1	SEAL OIL 18 X 7
219000	1	OIL SEAL 35 X 72 X 10
219002	1	BEARING 6207
219025	1	BALL D15 STAINLESS
219040	1	BEARING
219065	1	BEARING NJ-304
220825	1	SPRING F.GEAR CHANGE
284219	1	SNAP-RING OUTER 40X1.75
289000	1	SNAP-RING INNER
289052	1	SNAP-RING E-18
289193	1	OIL LEVEL GLASS
329004	1	PLUG F.OIL HOLE GEARBOX F.SPV
439006	1	PLUG F.OIL HOLE GEARBOX F.LE
451033	1	SCREW M8X25 HEX
459024	1	BOLT M8 X 90
471094	1	WASHER D8,4 STAR
479004	1	SEAL F.OIL PLUG GEARBOX LE
479005	1	WASHER D18 DIN 6916
480737	1	PIN CLAMP D6X45
739256	1	GEAR BOX F. LE-SPV & TG

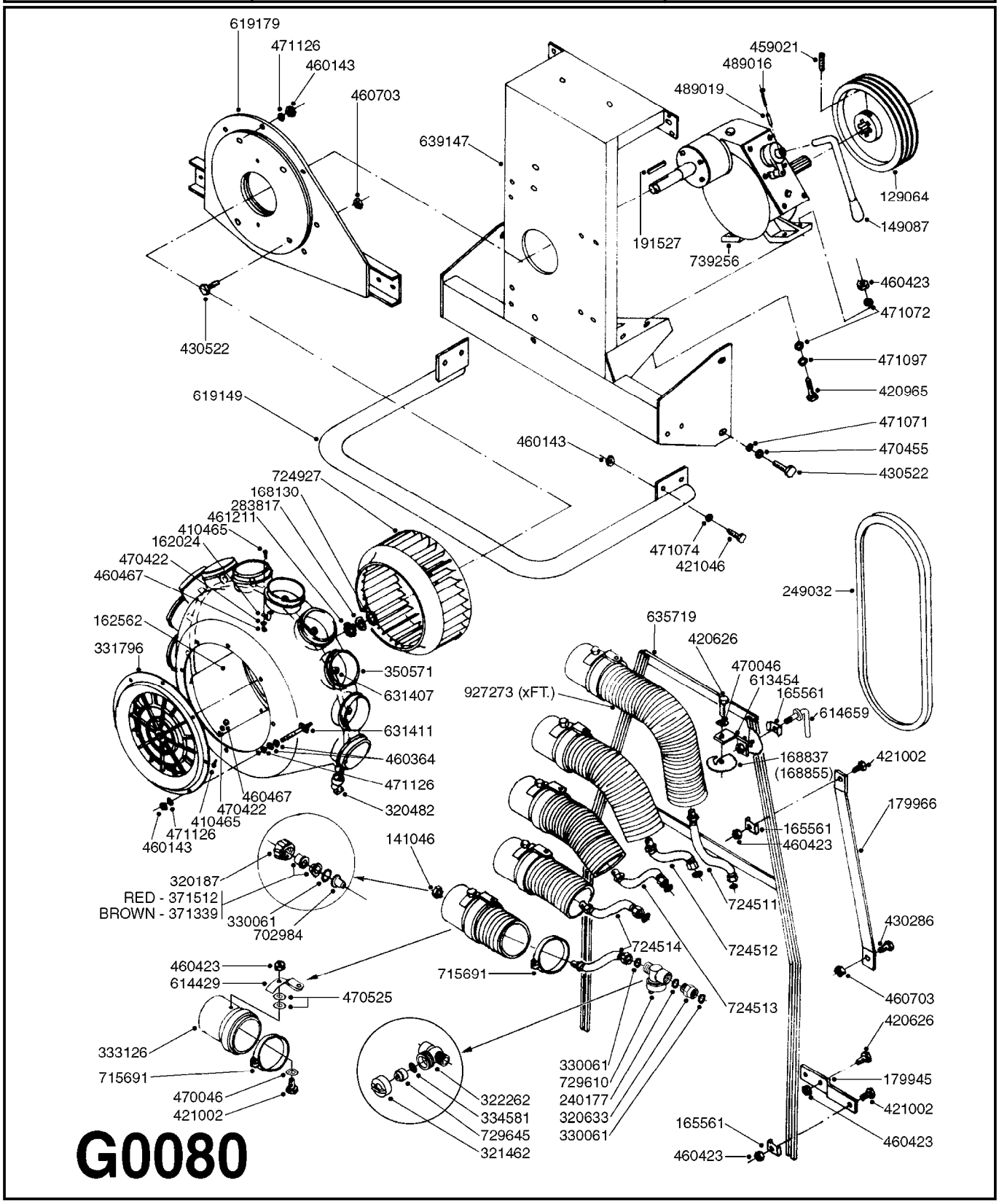
619179
471126
460143
460703
639147
459021
489016
489019
129064
149087
191527
739256
460423
471072
430522
471097
420965
619149
471071
470455
460143
430522
724927
168130
283817
461211
410465
162024
470422
460467
471074
421046
249032
162562
331796
635719
420626
470046
613454
165561
927273 (xFT.)
614659
350571
631407
631411
460364
471126
168837
(168855)
421002
460467
470422
410465
471126
460143
320482
179966
165561
460423
141046
320187
RED - 371512
BROWN - 371339
330061
702984
724511
430286
724514
724512
460423
614429
715691
470525
724513
460703
420626
333126
715691
330061
729610
240177
320633
330061
179945
470046
421002
322262
334581
729645
321462
421002
165561
460423
460423
G0080

Agroparts: www.HARDI-INTERNATIONAL.com

LE-SPV - BLOWER
G0080-HIN, 01:01:16

Date 12.08.2020 11:41

parts-n°	order qty	description
129064	1	PULLEY D200 GEAR BOX
141046	1	NUT 3/8" BSP
149087	1	HANDLE LE-650/750
162024	1	PIPE HOLDER FOR 12 PIPES
162562	1	SLIDE FOR MAXI - 10
165561	1	LOCKING PLATE
168130	1	WASHER F.BLOWER MAXI TR 600
168837	1	GUIDE F.ADJ.SPOUT LH
168855	1	GUIDE F.ADJ.SPOUT RH
179945	1	BRACKET
179966	1	MOUNTING BRACKET FOR MINI SPV
191527	1	KEY 10 X 8 X 55
240177	1	O-RING D16.1/11.3 X 2.4
249032	1	VEE BELT SPZ 1120
283817	1	WASHER LOCK D30 MB6
320187	1	FITT.DK CAP 3/8" BSP BLACK
320482	1	FITT.DK ELB. 1/2" BSP 60 DEG.
320633	1	FITT.DK HN 3/8"M X 3/8"F BSP
321462	1	CAP F.NO-DRIP ASSY.
322262	1	HOUSING F. NON DRIP DIAPHRAGM
330061	1	O-RING D16/D11X2,5
331796	1	FRAME FOR MAXI
333126	1	MOUTH PIECE F.5' HOSE
334581	1	DIAPHRAGM, NO-DRIP alt 241371
350571	1	BLOWER HOUSE MAXI-10
371339	1	NOZZLE ALBUZ BROWN WITH SWIRL
371512	1	NOZZLE CONE JET 1299-16 RED
410465	1	SCREW M5-.8 X 16MM DIN 7985 SS
420626	1	BOLT HEX 8.8 DEL M10X20 FT
420965	1	M10X40 MACHINE SCREW STAINLESS
421002	1	BOLT HEX 8.8 DEL M10X30 FT DIN933
421046	1	BOLT HEX M8X25/25 A2 SS DIN933
430286	1	BOLT HEX 8.8 DEL M12X30 FT
430522	1	BOLT HEX 8.8 DEL M12X25 FT
459021	1	DOWEL ALLEN M8X20
460143	1	LOCK NUT M8 SST A2 DIN985
460364	1	NUT HU M8 A2 SS DIN934
460423	1	NUT HEX M10X1.50 LOCK DIN985A2 SS
460467	1	NUT HEX M5 GALV.
460703	1	NUT HEX M12X1.75 LOCK DIN985A2 SS
461211	1	NUT M30X1.5 SKF W/CUT
470046	1	WASHER D18D11X1 LOCK
470422	1	WASHER AZ5
470455	1	WASHER D12 SPRING
470525	1	WASHER D19/D11.5X2.5
471071	1	WASHER M12 GALV
471072	1	WASHER M10 EL2
471074	1	WASHER M8 ELZ
471097	1	WASHER D10 SAFETY
471126	1	WASHER, M8, Ø16/ 8.4X 1.6, SS
489016	1	SLOTTED PIN D.3X20
489019	1	SLOTTED PIN D.5X20
613454	1	SUSPENSION FOR ADJ. SPOUT MINI
614429	1	MAXI SPOUT BRACKET
614659	1	HANDLE FOR SPOUT POSITION
619149	1	REAR BUMPER F. LP
619179	1	BRACKET F.BLOWER F-400 SPV
631407	1	DISTRIBUTOR TUBE,COMPLETE MAXI
631411	1	BOLT FOR MAXI
635719	1	UPRIGHT MAXI SPV
639147	1	BRACKET F.MINI/MAXI LE-SPV

parts-n°	order qty	description
702984	1	ANTI-DRIP VALVE, COMPLETE
715691	1	STRAP F.5"MOUNT.SPRG.HOSE
724511	1	HOSE 3/8"X1010
724512	1	HOSE 3/8"X800
724513	1	HOSE 3/8"X350
724514	1	HOSE 3/8"X275MAXI-SPV
724927	1	FAN WHEEL ASSY.MAXI 600
729610	1	NOZZLE ASSY. NON DRIP 3/8 THRD
729645	1	NON-DRIP SPRING ASSY.GREEN 10
739256	1	GEAR BOX F. LE-SPV & TG
927273	1	HOSE R X PVC X 5 X 12" GREY

TANGO - SPV 16" MAXI FAN
G0090-HIN, 01:01:16

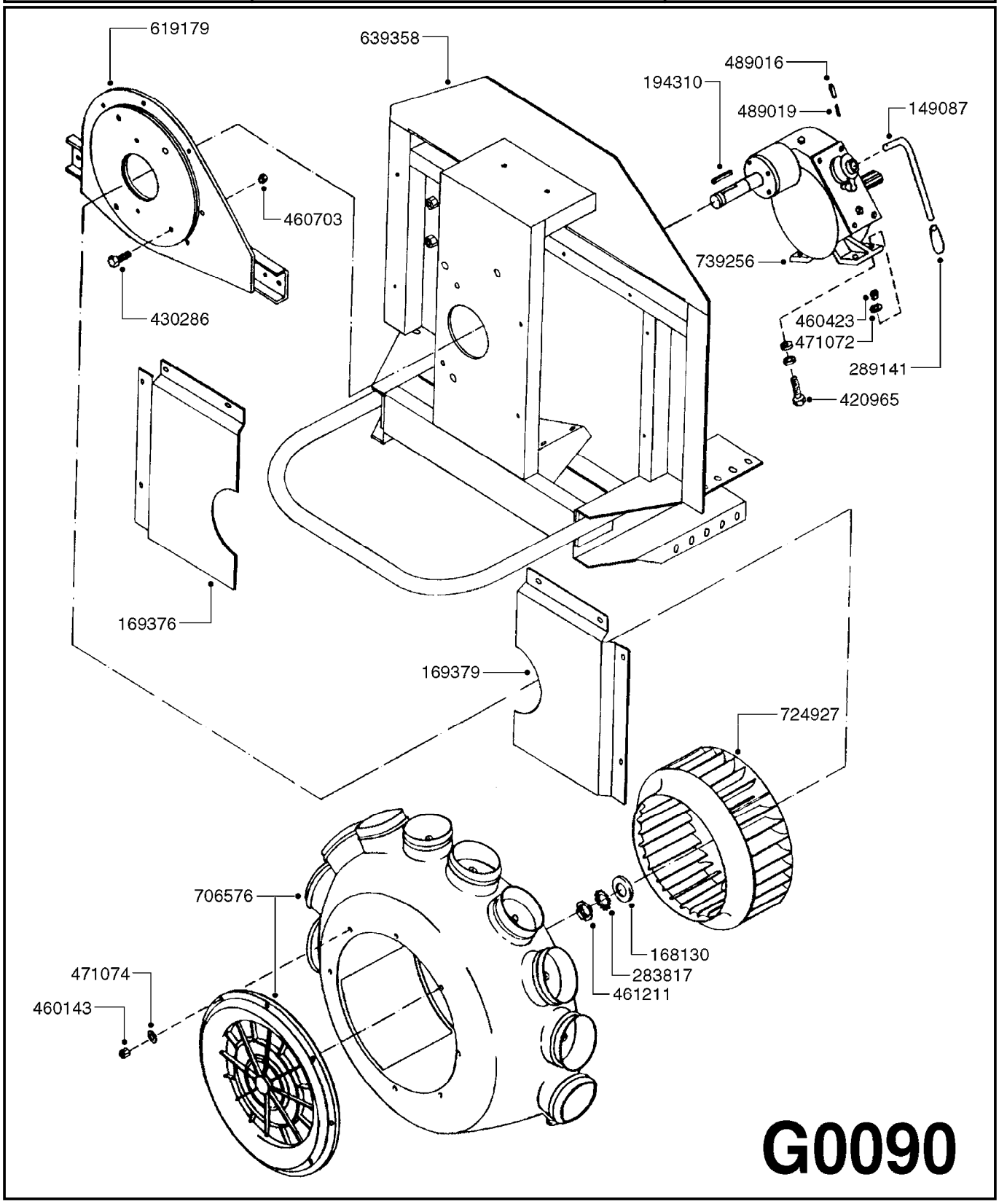

Agroparts: www.HARDI-INTERNATIONAL.com

TANGO - SPV 16" MAXI FAN
G0090-HIN, 01:01:16

Date 12.08.2020 11:41

parts-n°	order qty	description
149087	1	HANDLE LE-650/750
168130	1	WASHER F.BLOWER MAXI TR 600
169376	1	SPV SHIELD - LH
169379	1	SPV SHIELD - RH
194310	1	KEY 10 X 8 X 55
283817	1	WASHER LOCK D30 MB6
289141	1	HANDLE M-8
420965	1	M10X40 MACHINE SCREW STAINLESS
430286	1	BOLT HEX 8.8 DEL M12X30 FT
460143	1	LOCK NUT M8 SST A2 DIN985
460423	1	NUT HEX M10X1.50 LOCK DIN985A2 SS
460703	1	NUT HEX M12X1.75 LOCK DIN985A2 SS
461211	1	NUT M30X1.5 SKF W/CUT
471072	1	WASHER M10 EL2
471074	1	WASHER M8 ELZ
489016	1	SLOTTED PIN D.3X20
489019	1	SLOTTED PIN D.5X20
619179	1	BRACKET F.BLOWER F-400 SPV
639358	1	TANGO SPV FRAME
706576	1	BLOWER HOUSING FOR MAXI
724927	1	FAN WHEEL ASSY.MAXI 600
739256	1	GEAR BOX F. LE-SPV & TG

	Agroparts: www.HARDI-INTERNATIONAL.com	
HARDI	TANGO - SPV DOUBLE16" MAXI FAN G0100-HIN, 01:01:16	Page 0 Date 12.08.2020 11:41

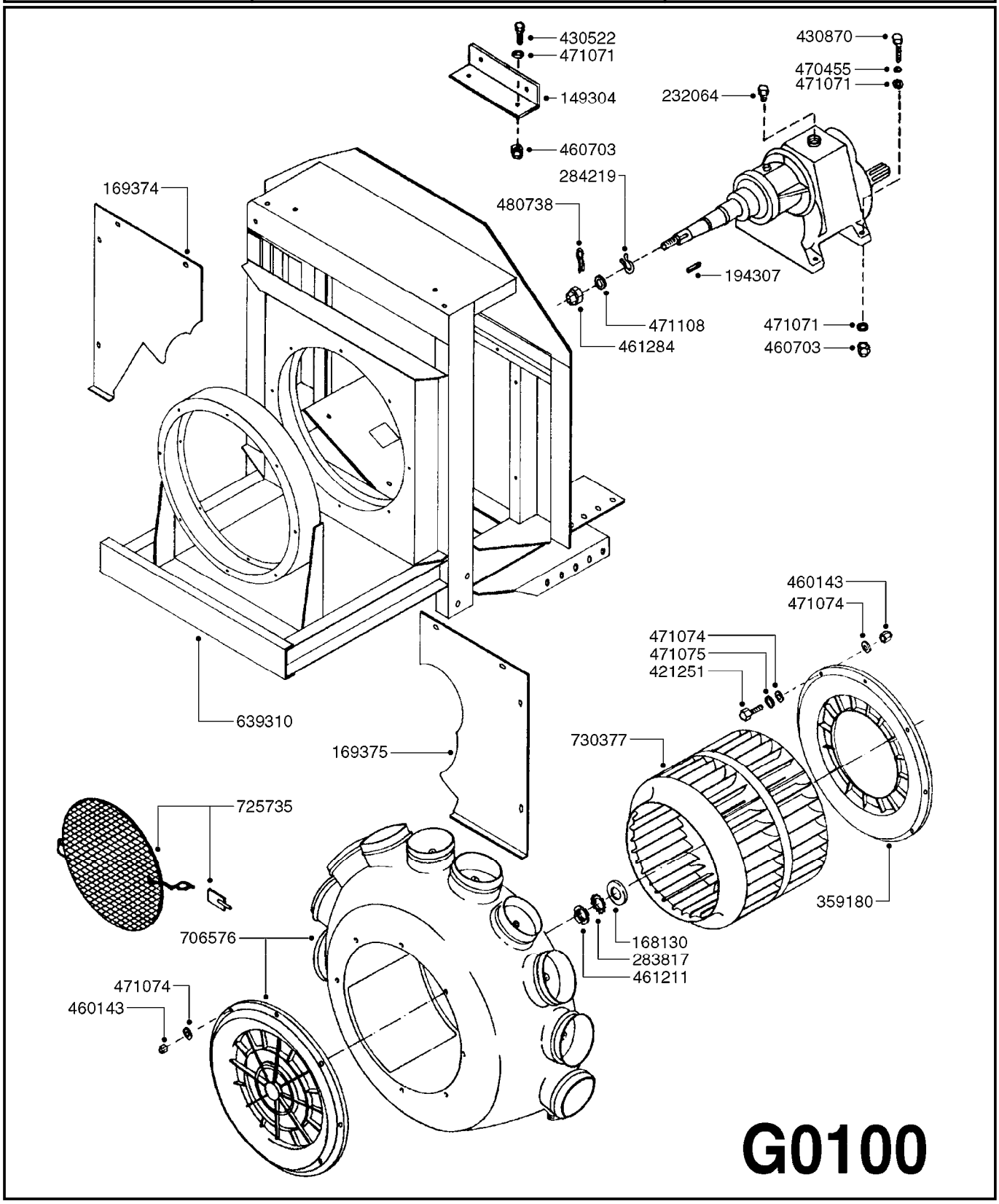

Agroparts: www.HARDI-INTERNATIONAL.com

TANGO - SPV DOUBLE16" MAXI FAN
G0100-HIN, 01:01:16

Date 12.08.2020 11:41

parts-n°	order qty	description
149304	1	BRACKET F.TANGO SPV
168130	1	WASHER F.BLOWER MAXI TR 600
169374	1	SPV DOUBLE SHIELD - LH
169375	1	SPV DOUBLE SHIELD - RH
194307	1	KEY 10 X 8 X 40
232064	1	PLUG 1/2' BRASS
283817	1	WASHER LOCK D30 MB6
284219	1	SNAP-RING OUTER 40X1.75
359180	1	INNER GRILL F.DOUBLE SPV FAN
421251	1	BOLT HEX M8X15
430522	1	BOLT HEX 8.8 DEL M12X25 FT
430870	1	BOLT HEX 8.8 DEL M12X55 FT
460143	1	LOCK NUT M8 SST A2 DIN985
460703	1	NUT HEX M12X1.75 LOCK DIN985A2 SS
461211	1	NUT M30X1.5 SKF W/CUT
461284	1	NUT HEX M24X2 SLOTTED
470455	1	WASHER D12 SPRING
471071	1	WASHER M12 GALV
471074	1	WASHER M8 ELZ
471075	1	WASHER M8 LOCK
471108	1	WASHER D44D25X4.5
480738	1	PIN D5X40 SPLIT
639310	1	TANGO SPV DOUBLE FRAME
706576	1	BLOWER HOUSING FOR MAXI
725735	1	PROTECTION GRATE COMP MAXI
730377	1	FAN WHEEL F.400D COMPLETE

	Agroparts: www.HARDI-INTERNATIONAL.com	
HARDI	CONDOR - 32" FAN G0110-HIN, 01:01:16	Page 0 Date 12.08.2020 11:41

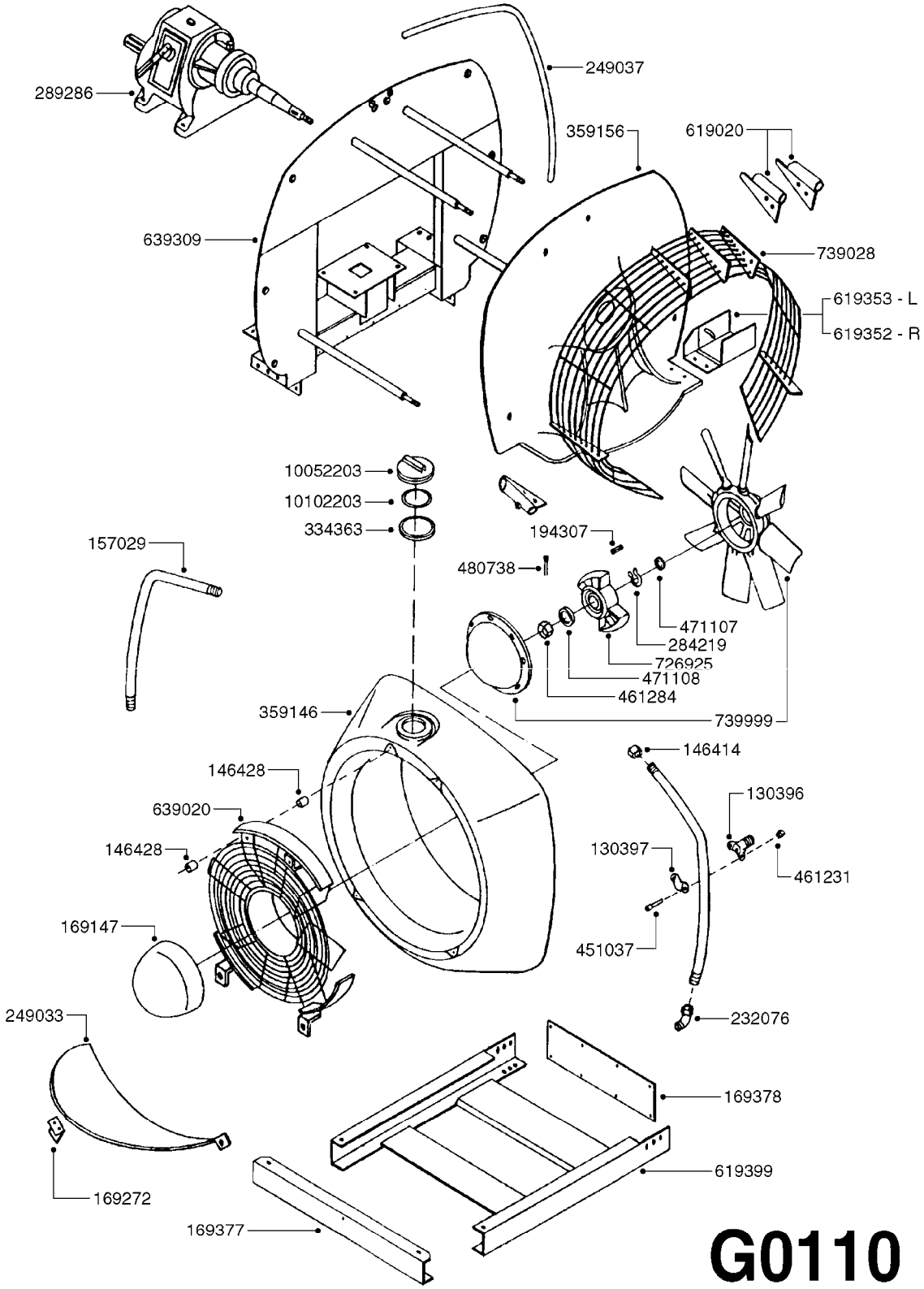

Agroparts: www.HARDI-INTERNATIONAL.com

CONDOR - 32" FAN
G0110-HIN, 01:01:16

Date 12.08.2020 11:41

parts-n°	order qty	description
130396	1	NOZZLE CASTING DOUBLE
130397	1	NOZZLE HOLDER UPPER PART
146414	1	TERMINATION STOPPER 22 X 100
146428	1	DISTANCE RING D 25 X 5
157029	1	SPRAY LINE LEFT TC-1000/1500
169147	1	COWLING FOR BLOWER
169272	1	BRACKET FOR RUBBER GUARD
169377	1	REAR BRACKET CONDOR FAN FRAME
169378	1	FRONT BRACKET CONDOR FAN FRAME
194307	1	KEY 10 X 8 X 40
232076	1	NIPPLE 1/2"M-W ESP.CIRC.BRA
249033	1	BLOWER PROT.GUARD RUBBER
249037	1	RUBBER STRAP
284219	1	SNAP-RING OUTER 40X1.75
289286	1	GEARBOX 2-MAXI & 820-X
334363	1	RING FOR LID USE 10619803
359146	1	BLOWER HOUSING FOR TC 500 C
359156	1	CONE CR-V F-820
451037	1	SCREW M6X20 HEX
461231	1	NUT HEX M6 BRASS
461284	1	NUT HEX M24X2 SLOTTED
471107	1	WASHER D50,6D40,1X5
471108	1	WASHER D44D25X4.5
480738	1	PIN D5X40 SPLIT
619020	1	H20830304 FITT. F. GRID D820
619352	1	SAFETY GRILL - RH
619353	1	SAFETY GRILL - LH
619399	1	FRAME FOR CONDOR FAN
639020	1	FAN SCREEN TOP F.TC F820
639309	1	CONDOR FAN FRAME
726925	1	CENTRIFUGAL CLUTCH D. 245
739028	1	GRILLE PROTECTION TUR.820
739999	1	BLOWER WHEEL D.820
10052203	1	LID VENT ASSY
10102203	1	GASKET F.16" LID BREATHER

LP - GEAR BOX
G0120-HIN, 01:01:16

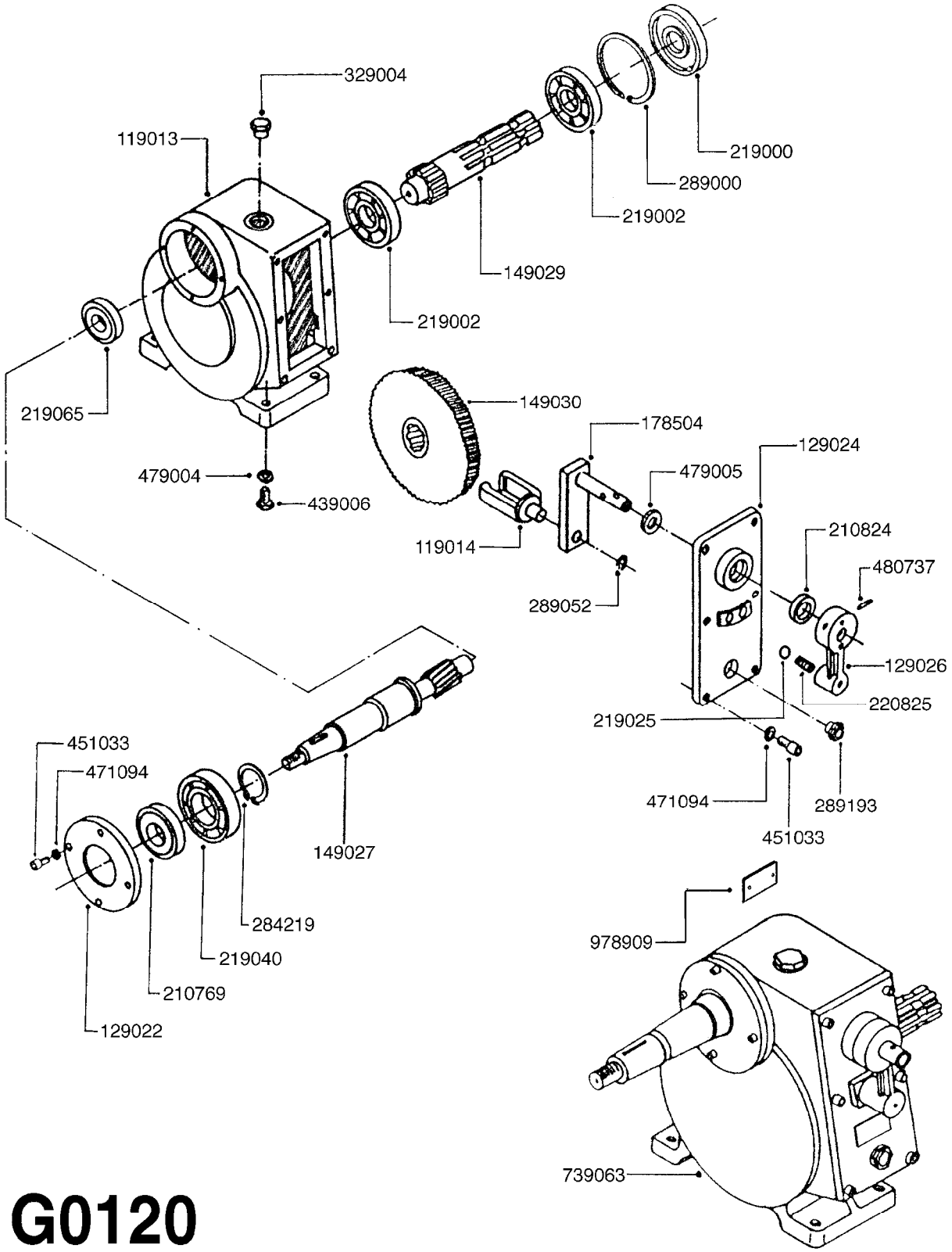

G0120

Agroparts: www.HARDI-INTERNATIONAL.com

LP - GEAR BOX
G0120-HIN, 01:01:16

Date 12.08.2020 11:41

parts-n°	order qty	description
119013	1	GEAR BOX HOUSING 1-V
119014	1	SHIFT HEAD F. 1-GEAR GEAR BOX
129022	1	GEAR BOX LID 1 GEAR TURB.
129024	1	COVER F. 1-GEAR GEAR BOX
129026	1	LEVER FOR ARM
149027	1	SHAFT OUTPUT F.GEARBOX LP
149029	1	AXLE SHAFT
149030	1	GEARWHEEL Z = 22 M = 3.5
178504	1	ARM FOR 1-GEAR GEAR BOX
210769	1	SEAL OIL 62 X 40 X 10
210824	1	SEAL OIL 18 X 7
219000	1	OIL SEAL 35 X 72 X 10
219002	1	BEARING 6207
219025	1	BALL D15 STAINLESS
219040	1	BEARING
219065	1	BEARING NJ-304
220825	1	SPRING F.GEAR CHANGE
284219	1	SNAP-RING OUTER 40X1.75
289000	1	SNAP-RING INNER
289052	1	SNAP-RING E-18
289193	1	OIL LEVEL GLASS
329004	1	PLUG F.OIL HOLE GEARBOX F.SPV
439006	1	PLUG F.OIL HOLE GEARBOX F.LE
451033	1	SCREW M8X25 HEX
471094	1	WASHER D8,4 STAR
479004	1	SEAL F.OIL PLUG GEARBOX LE
479005	1	WASHER D18 DIN 6916
480737	1	PIN CLAMP D6X45
739063	1	GEAR BOX F.LP

LP - BLOWER
G0130-HIN, 01:01:16

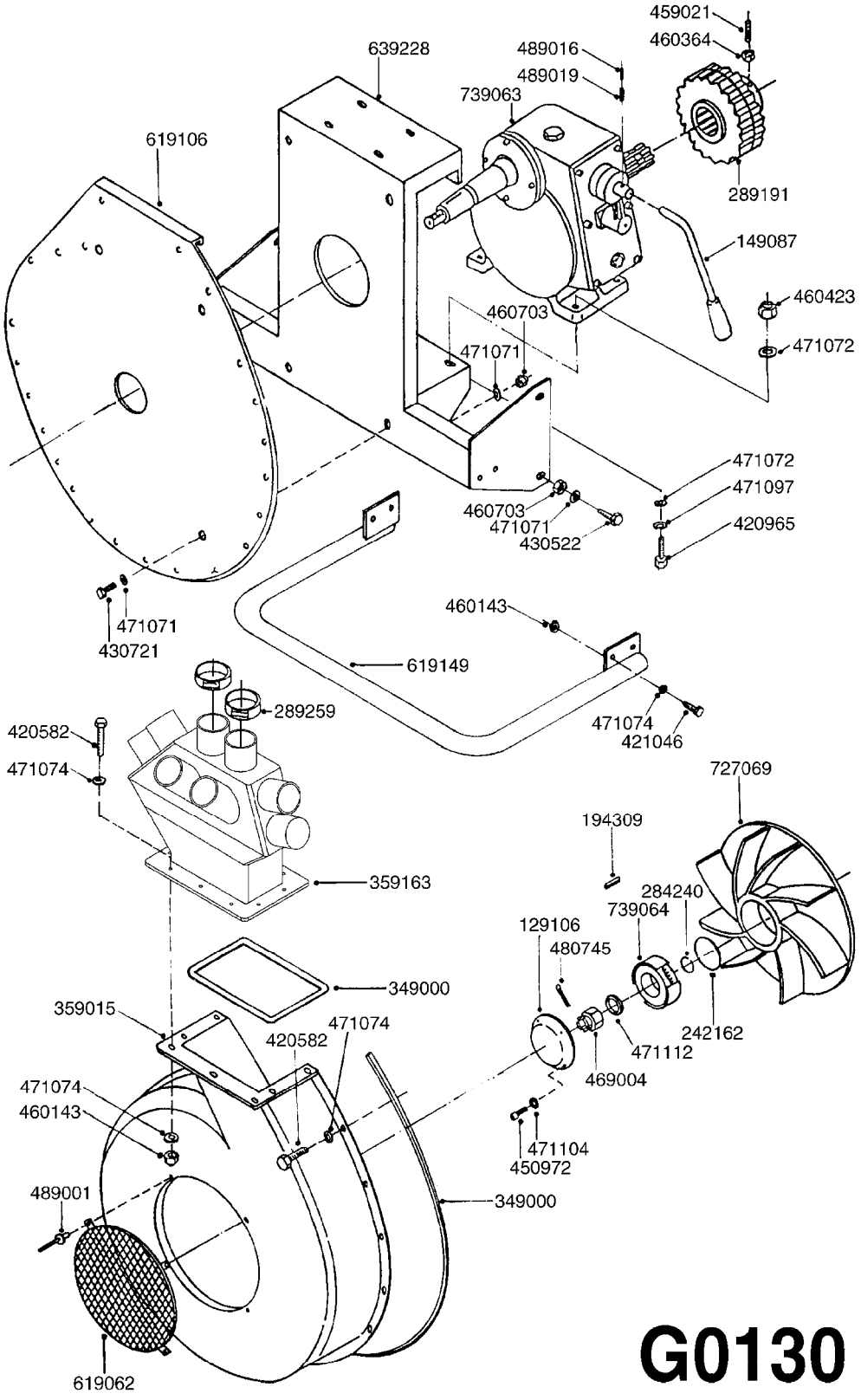

Agroparts: www.HARDI-INTERNATIONAL.com

LP - BLOWER
G0130-HIN, 01:01:16

Date 12.08.2020 11:41

parts-n°	order qty	description
129106	1	HUB CAP F. 540 FAN LP
149087	1	HANDLE LE-650/750
194309	1	KEY 8 X 7 X 40
242162	1	O-RING D140.5X134.5 X 3
284240	1	SNAP-RING OUTER 35X1.5
289191	1	GEARWHEEL 3/4" Z-19 SPL.
289259	1	CLAMP 112/104
349000	1	SEAL FOR CANNON
359015	1	BLOWER HOUSING LP/TP
359163	1	AIR DIST. HOUSING
420582	1	BOLT HEX 8.8 DEL M8X20 FT A2
420965	1	M10X40 MACHINE SCREW STAINLESS
421046	1	BOLT HEX M8X25/25 A2 SS DIN933
430522	1	BOLT HEX 8.8 DEL M12X25 FT
430721	1	BOLT HEX 8.8 DEL M12X40 FT
450972	1	SCREW M6X15 ALLEN GALV.
459021	1	DOWEL ALLEN M8X20
460143	1	LOCK NUT M8 SST A2 DIN985
460364	1	NUT HU M8 A2 SS DIN934
460423	1	NUT HEX M10X1.50 LOCK DIN985A2 SS
460703	1	NUT HEX M12X1.75 LOCK DIN985A2 SS
469004	1	M-20 SPECIAL NUT
471071	1	WASHER M12 GALV
471072	1	WASHER M10 EL2
471074	1	WASHER M8 ELZ
471097	1	WASHER D10 SAFETY
471104	1	WASHER D6 STAR
471112	1	WASHER D20
480745	1	PIN MD4X50 SPLIT
489001	1	RIVET 4X20 AL.
489016	1	SLOTTED PIN D.3X20
489019	1	SLOTTED PIN D.5X20
619062	1	/
619106	1	SUPPORT PLATE F.FAN HOUSING
619149	1	REAR BUMPER F. LP
639228	1	SUPPORT P500 STANDARD
727069	1	CENTRIFUG WHEEL 540 alt 739994
739063	1	GEAR BOX F.LP
739064	1	CENTRIFUGAL CLUTCH F.LP D130

LP - BLOWER FAN
G0140-HIN, 01:01:16

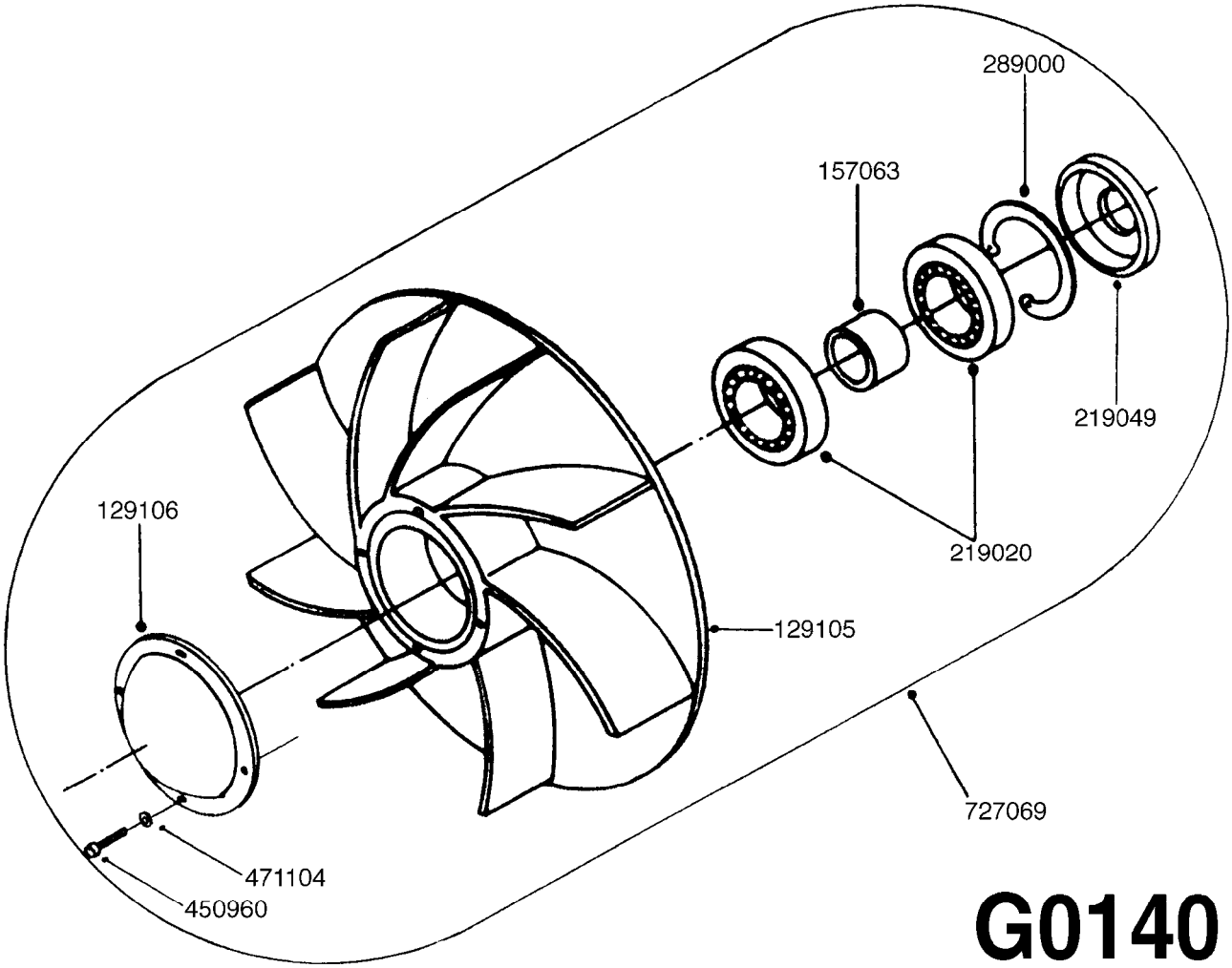

G0140

Agroparts: www.HARDI-INTERNATIONAL.com

LP - BLOWER FAN
G0140-HIN, 01:01:16

Date 12.08.2020 11:41

parts-n°	order qty	description
129105	1	540 FAN LP
129106	1	HUB CAP F. 540 FAN LP
157063	1	BUSHING F. BEARINGS P540-D
219020	1	BEARING
219049	1	OIL SEAL D40 x D72 x 7MM
289000	1	SNAP-RING INNER
450960	1	SCREW M6X20 HEX
471104	1	WASHER D6 STAR
727069	1	CENTRIFUG WHEEL 540 alt 739994

LP - FRAME F. OUTLETS
G0150-HIN, 01:01:16

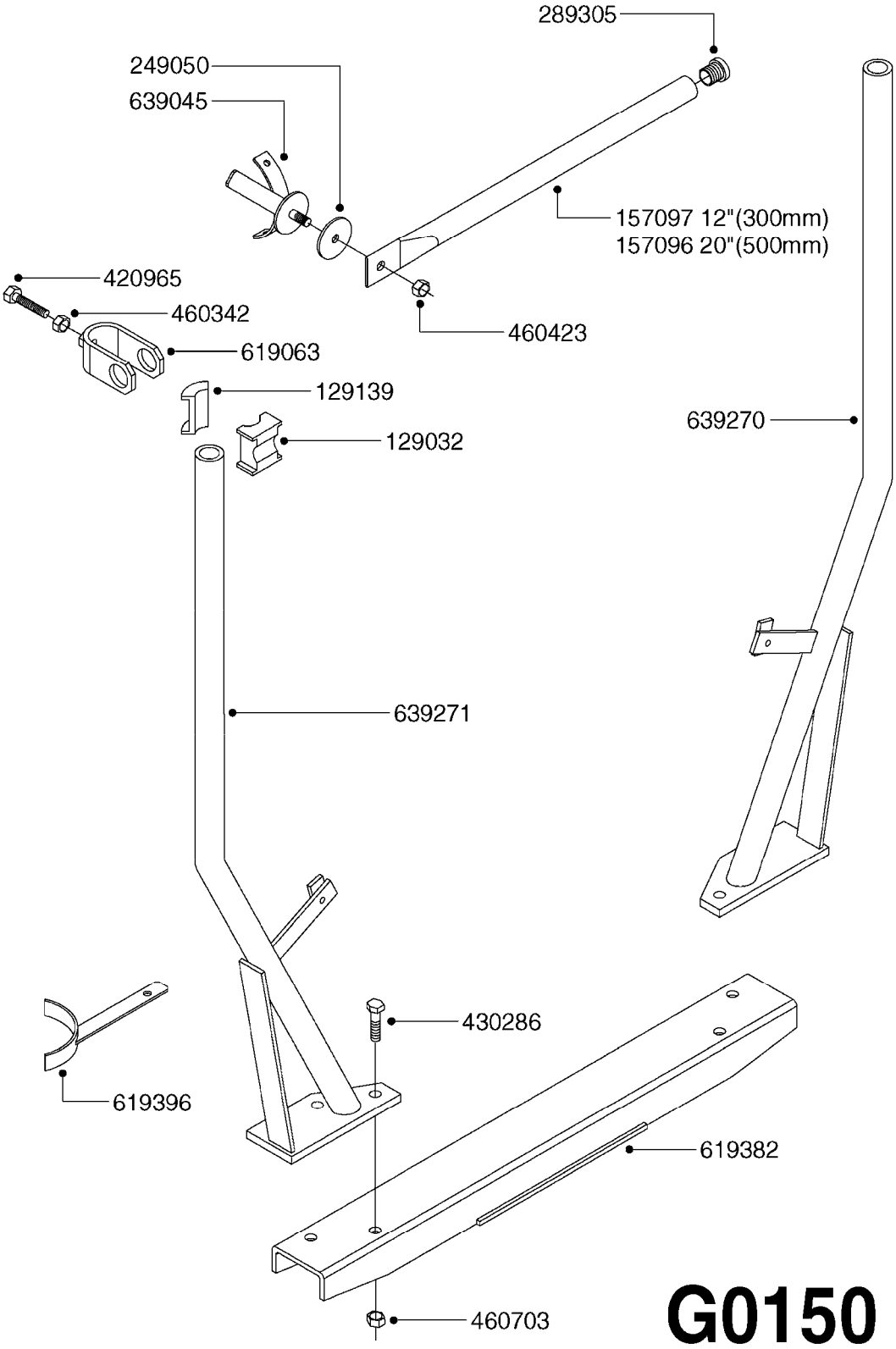

G0150

Agroparts: www.HARDI-INTERNATIONAL.com

LP - FRAME F. OUTLETS
G0150-HIN, 01:01:16

Date 12.08.2020 11:41

parts-n°	order qty	description
129032	1	CLAMP HALF F.TUBE EXTENSION
129139	1	CLAMP HALF F.TUBE EXTENSION
157096	1	TUBE 3/4"x700 SPOUT BRACKET
157097	1	EXTENSION ROD L=12"
249050	1	FRICTION WASHER D48X10X3.5
289305	1	TUBE PLUG D24
420965	1	M10X40 MACHINE SCREW STAINLESS
430286	1	BOLT HEX 8.8 DEL M12X30 FT
460342	1	NUT HEX M10 DEL DIN934
460423	1	NUT HEX M10X1.50 LOCK DIN985A2 SS
460703	1	NUT HEX M12X1.75 LOCK DIN985A2 SS
619063	1	HOLDER FOR EXTENSION
619382	1	LP FRAME BASE PLATE
619396	1	CURVED BRACKET F. LP FRAME
639045	1	BRACKET FOR SPOUT RH
639270	1	LP FRAME RH
639271	1	LP FRAME LH

LP - CANNON BLOWER AND FRAME
G0160-HIN, 01:01:16

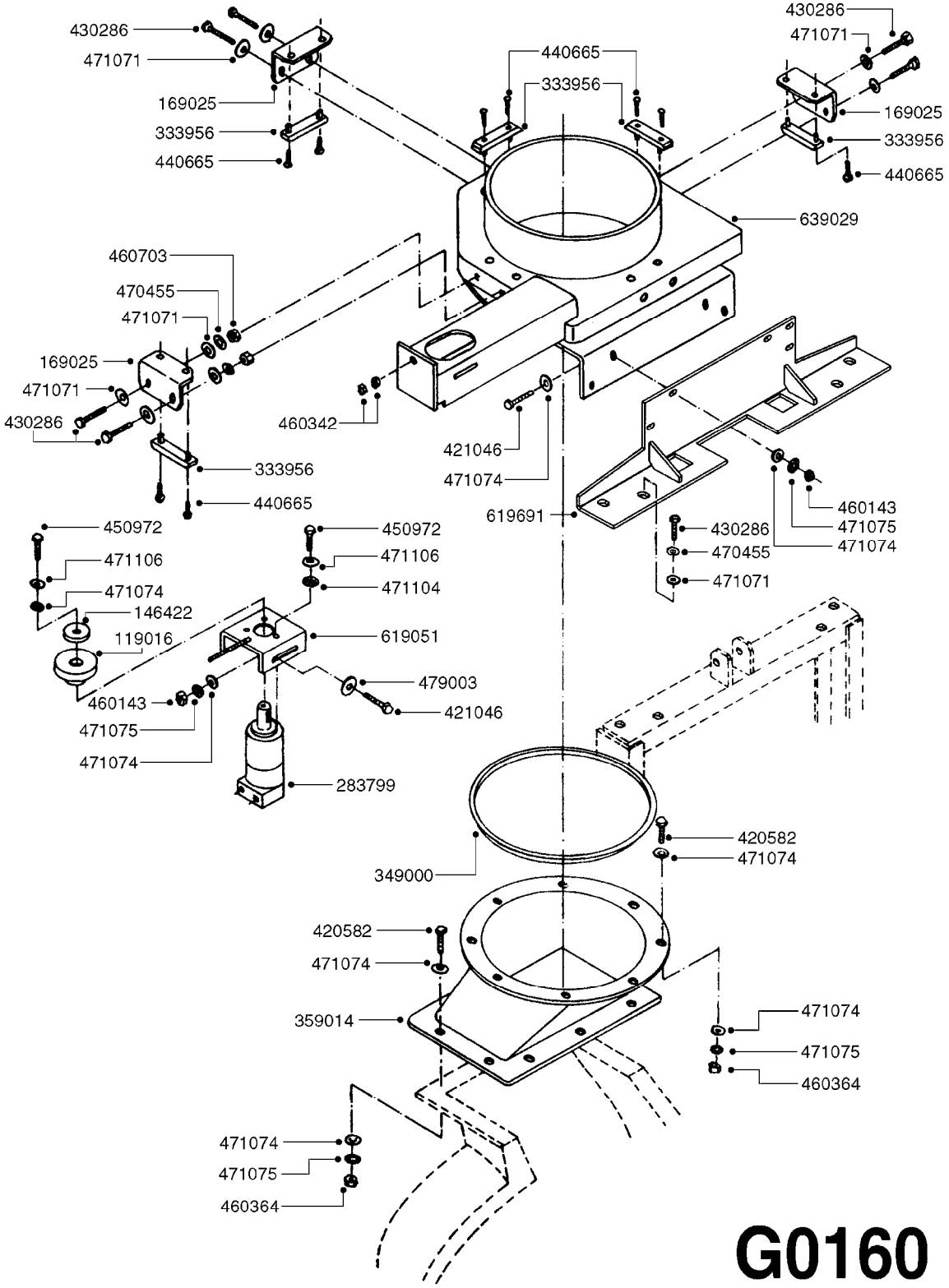

G0160

Agroparts: www.HARDI-INTERNATIONAL.com

LP - CANNON BLOWER AND FRAME
G0160-HIN, 01:01:16

Date 12.08.2020 11:41

parts-n°	order qty	description
119016	1	PULLEY D68
146422	1	WASHER FOR CENTRIFUGAL PUMP
169025	1	STOP BRAKETS CANNON
283799	1	HYD. MOTOR OMM 32
333956	1	SLIDE SHOE 91X25X10
349000	1	SEAL FOR CANNON
359014	1	HOUSING F.BLOWER (FIBERGLASS)
420582	1	BOLT HEX 8.8 DEL M8X20 FT A2
421046	1	BOLT HEX M8X25/25 A2 SS DIN933
430286	1	BOLT HEX 8.8 DEL M12X30 FT
440665	1	SCREW M4.2X16 STAINLESS
450972	1	SCREW M6X15 ALLEN GALV.
460143	1	LOCK NUT M8 SST A2 DIN985
460342	1	NUT HEX M10 DEL DIN934
460364	1	NUT HU M8 A2 SS DIN934
460703	1	NUT HEX M12X1.75 LOCK DIN985A2 SS
470455	1	WASHER D12 SPRING
471071	1	WASHER M12 GALV
471074	1	WASHER M8 ELZ
471075	1	WASHER M8 LOCK
471104	1	WASHER D6 STAR
471106	1	WASHER D6
479003	1	479003
619051	1	619051
619691	1	BRACKET F.CANNON MERC/ZENIT
639029	1	BRACKET BASE CANNON

	Agroparts: www.HARDI-INTERNATIONAL.com	
HARDI	CANNON "L" SPOUT ASSEMBLY G0170-HIN, 01:01:16	Page 0 Date 12.08.2020 11:41

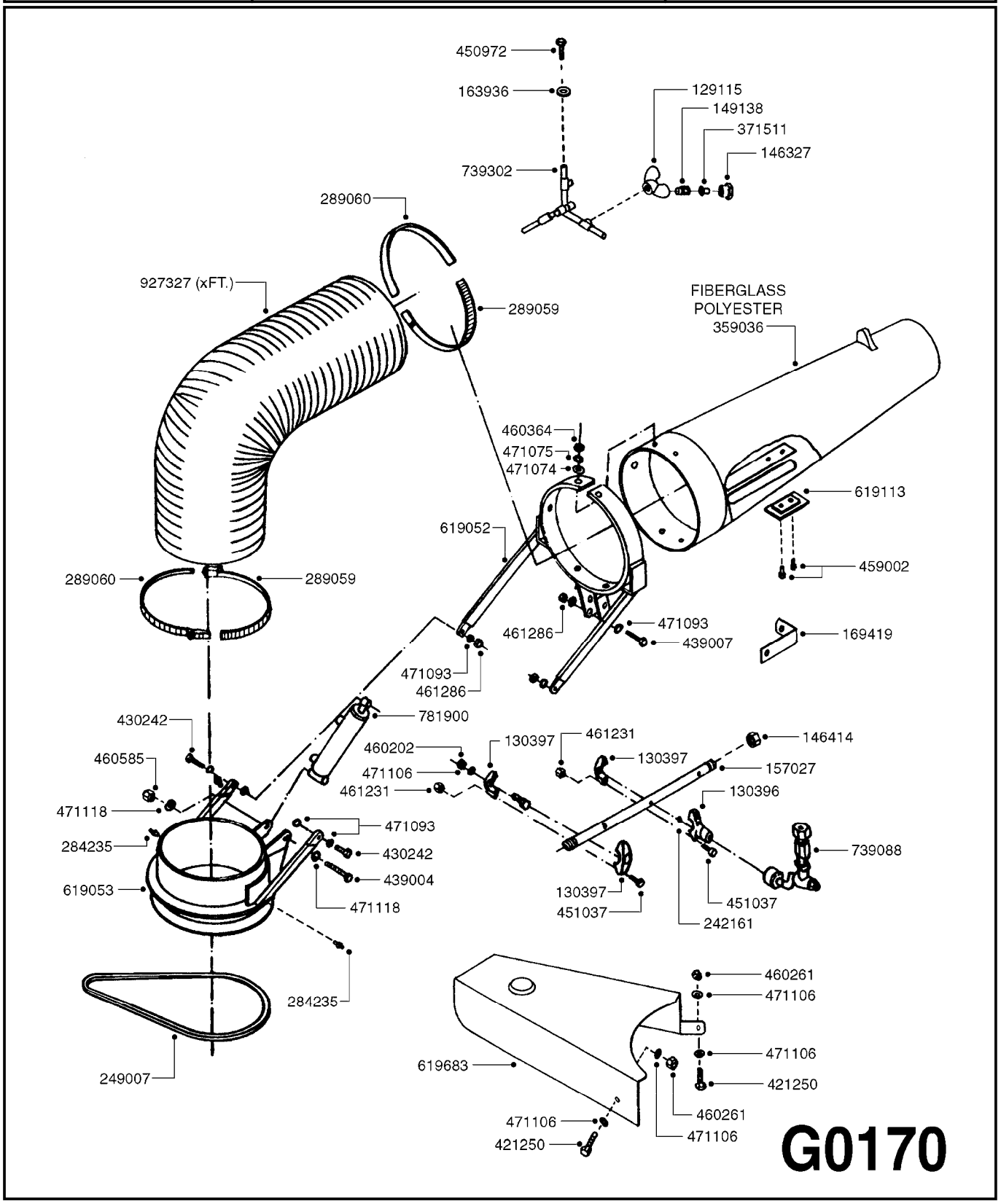

Agroparts: www.HARDI-INTERNATIONAL.com

CANNON "L" SPOUT ASSEMBLY
G0170-HIN, 01:01:16

Date 12.08.2020 11:41

parts-n°	order qty	description
129115	1	DOUBLE NOZZLE HOLDER
130396	1	NOZZLE CASTING DOUBLE
130397	1	NOZZLE HOLDER UPPER PART
146327	1	UNION NUT 3/8' BRASS
146414	1	TERMINATION STOPPER 22 X 100
149138	1	ADAPTER FOR NOZZLE H
157027	1	NOZZLE TUBE CANNON BOTTOM
163936	1	WASHER D15/D6.2X1
169419	1	SUPPORT F.SPOUT "CANNON L"
242161	1	O-RING 6 X 3.0
249007	1	BELT FOR CANNON
284235	1	ENGRASADOR M-6/100 RECTO
289059	1	STRAP 130-150
289060	1	STRAP.D.140/160 S-W2 INOX
359036	1	NOZZLE OUTLET F.CANNON
371511	1	NOZZLE CONE JET 1299-14 ORANGE
421250	1	BOLT HEX M6X35
430242	1	BOLT HEX 8.8 M14 X 45 GALV.
439004	1	BOLT HEX M16 X 100 GALV.
439007	1	BOLT HEX M14 X 70 GALV.
450972	1	SCREW M6X15 ALLEN GALV.
451037	1	SCREW M6X20 HEX
459002	1	SCREW N10X1/2"
460202	1	NUT HEX M6
460261	1	NUT HEX M6X1.00 LOCK DIN985 A2 SS
460364	1	NUT HU M8 A2 SS DIN934
460585	1	LOCKING NUT M16 DIN985 A2 SS
461231	1	NUT HEX M6 BRASS
461286	1	NUT M14 SAFETY
471074	1	WASHER M8 ELZ
471075	1	WASHER M8 LOCK
471093	1	WASHER D14 GALV. (168873)
471106	1	WASHER D6
471118	1	WASHER D16 TENSION
619052	1	SUPPORT F.AIR SPOUT CANNON
619053	1	BASE SWIVEL F.AIR SPOUT CANNON
619113	1	MOUNT PLATE F.AIR SLOT CANNON
619683	1	SHIELD F.BELT CANNON
739088	1	NOZZLE HOLDER CANNON
739302	1	STAR NOZZLE HOLDER F.CANNON
781900	1	CYLINDER D20-150
927327	1	HOSE R X 300MM X 12"

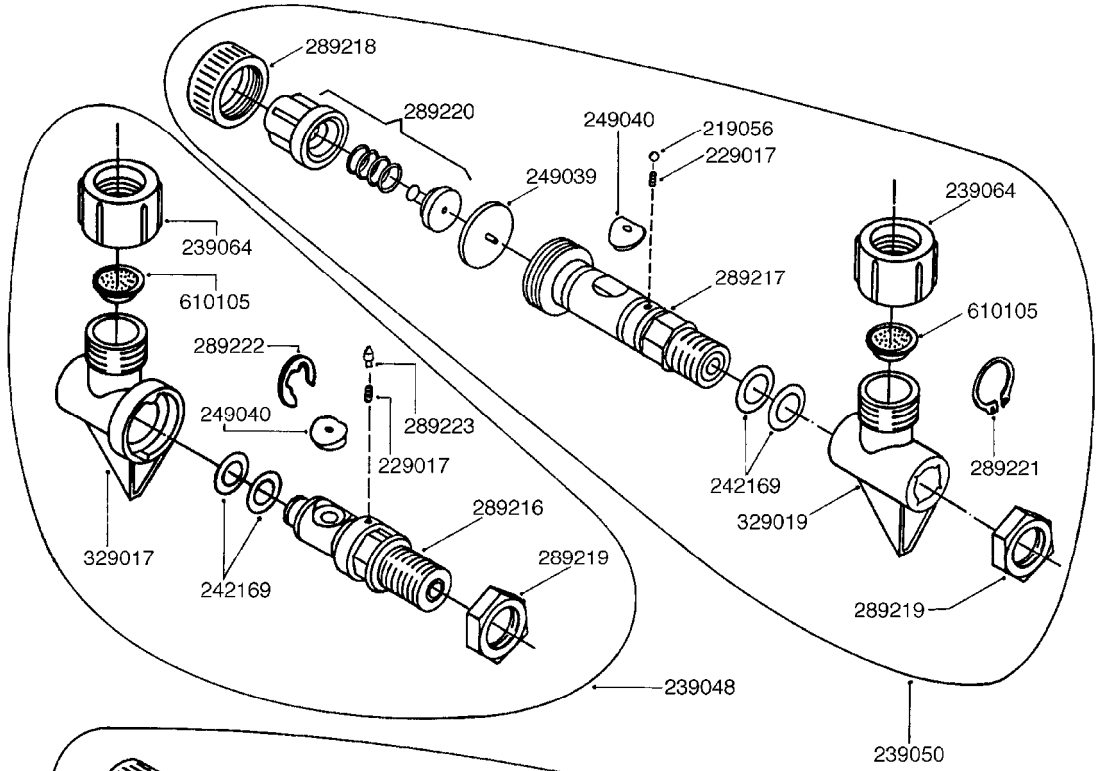
289218
289220
249040
219056
229017
249039
239064
239064
610105
289217
610105
289222
249040
289223
229017
289221
242169
329019
289216
329017
289219
242169
289219
239048
239050

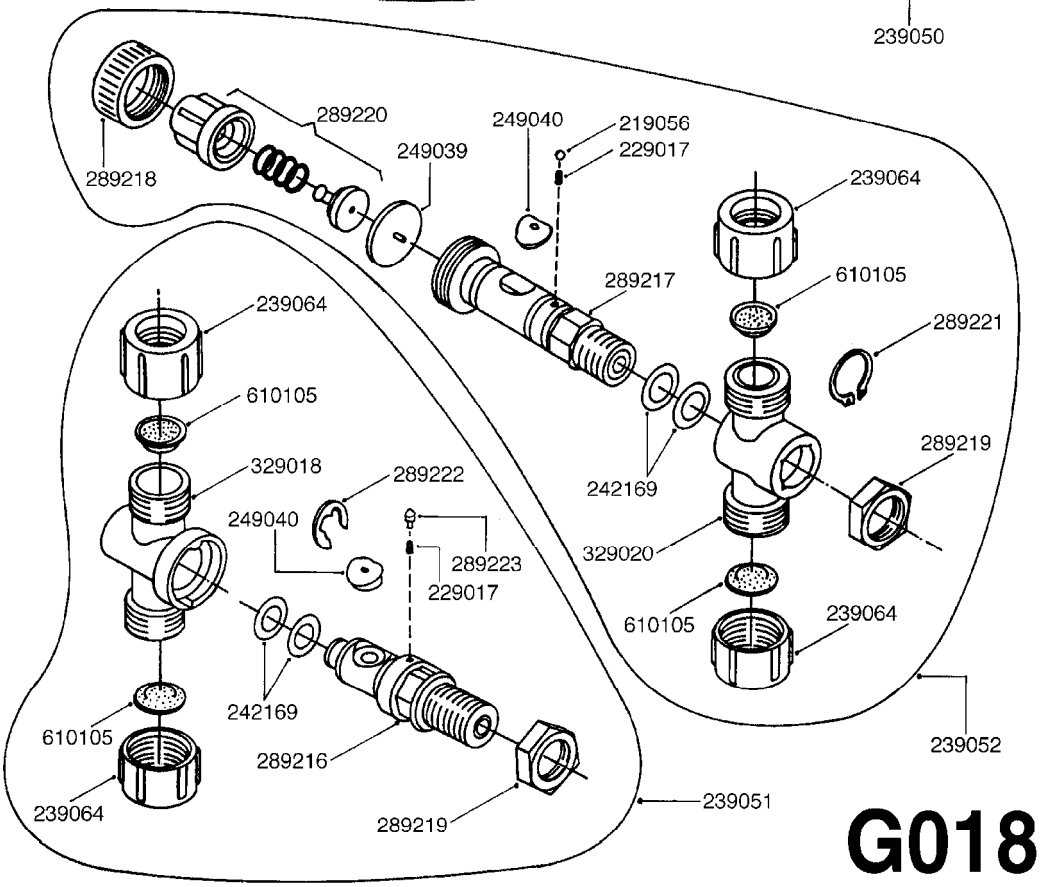
289220
249040
219056
229017
249039
289218
239064
289217
610105
239064
289221
610105
289219
329018
289222
242169
249040
289223
329020
229017
610105
239064
242169
610105
289216
239052
239064
289219
239051

G0180

Agroparts: www.HARDI-INTERNATIONAL.com

LB/LP-SINGLE & DOUBLE NOZZLES
G0180-HIN, 01:01:16

Date 12.08.2020 11:41

parts-n°	order qty	description
219056	1	BALL F.NOZZLE HOLDER LB
229017	1	SPRING F.NOZZLE HOLDER LB
239048	1	NOZZLE BODY F.LB W/O NON DRIP
239050	1	NOZZLE ASSY.NO DRIP SINGLE
239051	1	NOZZLE ASSY.NO DRIP DOUBLE
239052	1	NOZZLE ASSY.DOUBLE
239064	1	NYLON NUT - ARAG
242169	1	O-RING F.NOZZLE HOLDER LB50
249039	1	DIAPHRAGM F. CHECK VALVE LB50
249040	1	PIN F.NOZZLE HOLDER LB
289216	1	HOLDER F.ARAG DOUBLE NOZZLE
289217	1	HOLDER F.ARAG NON-DRIP
289218	1	NUT ARAG
289219	1	NUT 1/4" ARAG
289220	1	SPRING ASSEMBLY ARAG
289221	1	SNAP RING ARAG
289222	1	RETAINER CLIP - ARAG
289223	1	LOCK PIN F.NOZZLE
329017	1	ADJ.NOZZLE HOLDER ARAG NO-DRIP
329018	1	ADJ.DOUBLE NOZ.HOLDER - ARAG
329019	1	ADJ.NOZZLE HOLDER ARAG NO-DRIP
329020	1	ADJ.DOUBLE NOZ.HOLDER - ARAG
610105	1	NOZZLE FILTER

ARROW - 30" AXIAL FAN
G0190-HIN, 01:01:16

Date 12.08.2020 11:41

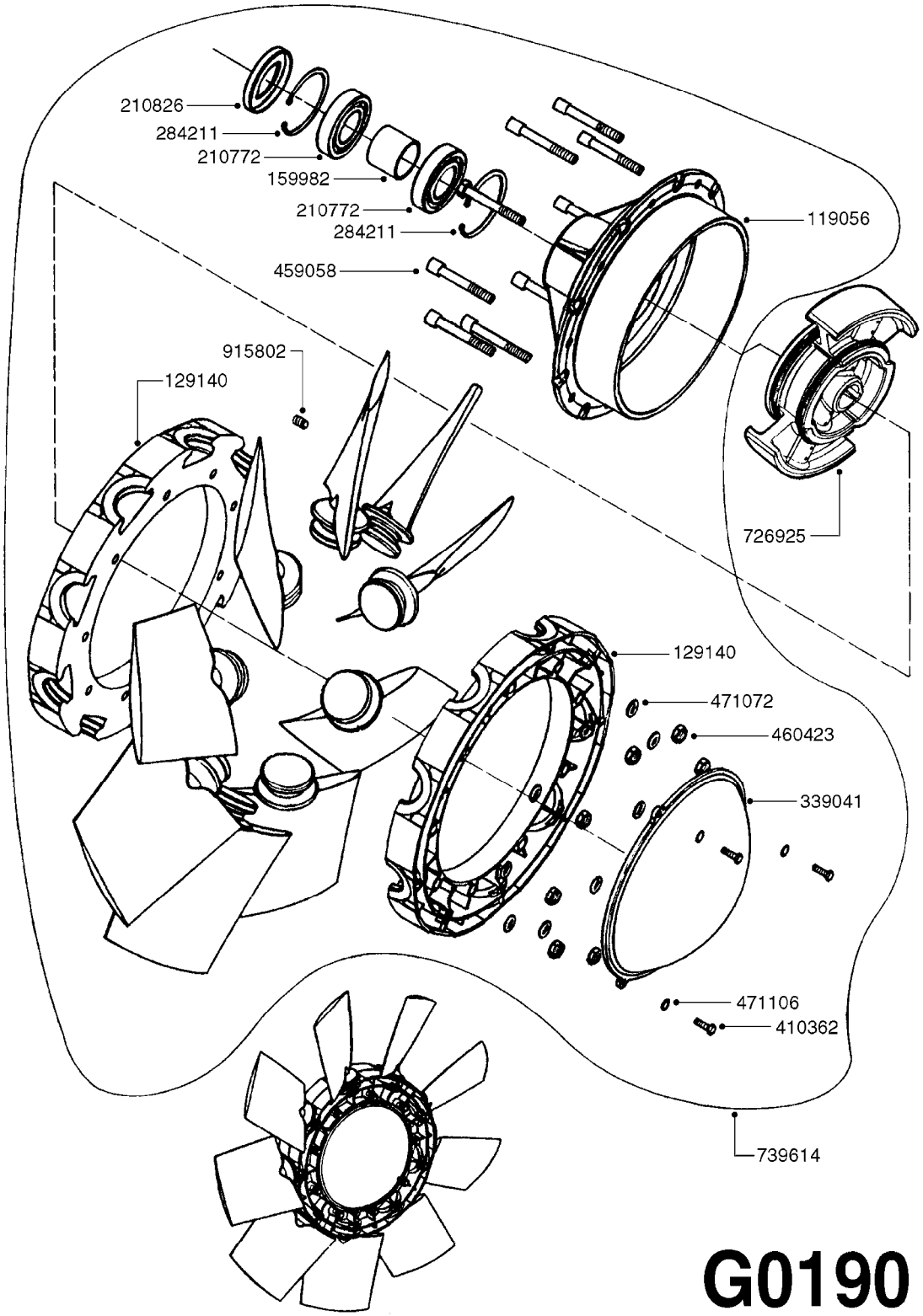

G0190

Agroparts: www.HARDI-INTERNATIONAL.com

ARROW - 30" AXIAL FAN
G0190-HIN, 01:01:16

Date 12.08.2020 11:41

parts-n°	order qty	description
119056	1	CENTER WHEEL F.30"/32" FAN
129140	1	FLANGE F.CENTER WHEEL 30"/32"
159982	1	DISTANCE TUBE FOR 820
210772	1	BALL BEARING 6208 2RS1
210826	1	SEAL OIL 45 X 10
284211	1	SNAP-RING INNER 80X2.5
339041	1	CAP FOR FAN
410362	1	BOLT HEX 8.8 SS M6X20
459058	1	ALLEN SCREW M10X80
460423	1	NUT HEX M10X1.50 LOCK DIN985A2 SS
471072	1	WASHER M10 EL2
471106	1	WASHER D6
726925	1	CENTRIFUGAL CLUTCH D. 245
739614	1	FAN - AXIAL 30"
915802	1	SET SCREW DIN 913 6X6

ARROW - GEAR BOX/FAN 30"BLOWER
G0200-HIN, 01:01:16

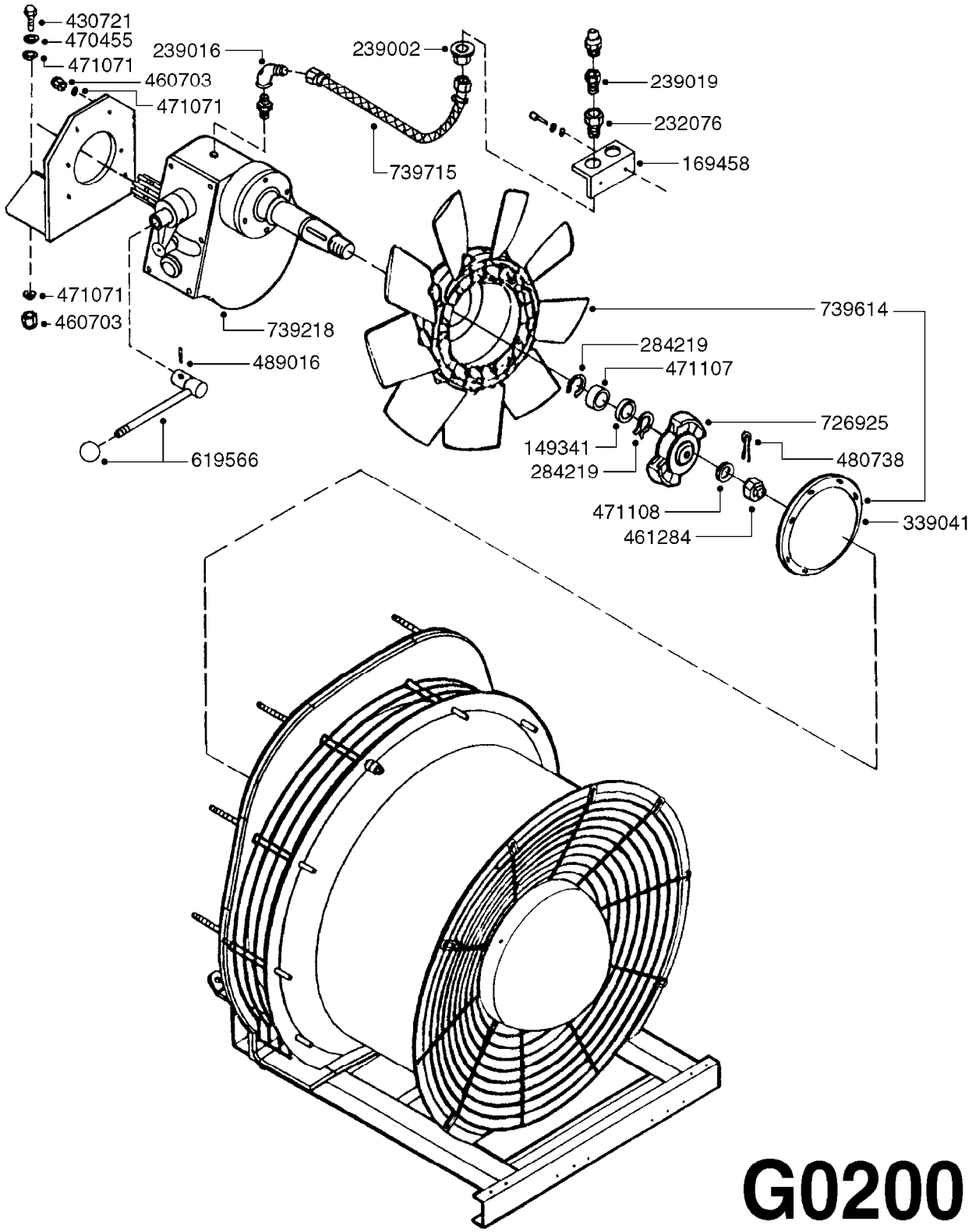

G0200

Agroparts: www.HARDI-INTERNATIONAL.com

ARROW - GEAR BOX/FAN 30"BLOWER
G0200-HIN, 01:01:16

Date 12.08.2020 11:41

parts-n°	order qty	description
149341	1	SPACER F820 - SHAFT 1 SPEED
169458	1	BRACKET F.REMOTE GREASE PORT
232076	1	NIPPLE 1/2"M-W ESP.CIRC.BRA
239002	1	NUT 1/2" BSP BRASS F.BULKHEAD
239016	1	ELBOW FITTING 1/2" BRASS
239019	1	ADAPTER 3/4"F - 1/2"M
284219	1	SNAP-RING OUTER 40X1.75
339041	1	CAP FOR FAN
430721	1	BOLT HEX 8.8 DEL M12X40 FT
460703	1	NUT HEX M12X1.75 LOCK DIN985A2 SS
461284	1	NUT HEX M24X2 SLOTTED
470455	1	WASHER D12 SPRING
471071	1	WASHER M12 GALV
471107	1	WASHER D50,6D40,1X5
471108	1	WASHER D44D25X4.5
480738	1	PIN D5X40 SPLIT
489016	1	SLOTTED PIN D.3X20
619566	1	SHIFT HANDLE FOR GEARBOX
726925	1	CENTRIFUGAL CLUTCH D. 245
739218	1	GEARBOX ONE GEAR TB F-820
739614	1	FAN - AXIAL 30"
739715	1	HOSE F.REMOTE GREASE PORT

ARROW - 30" BLOWER
G0210-HIN, 01:01:16

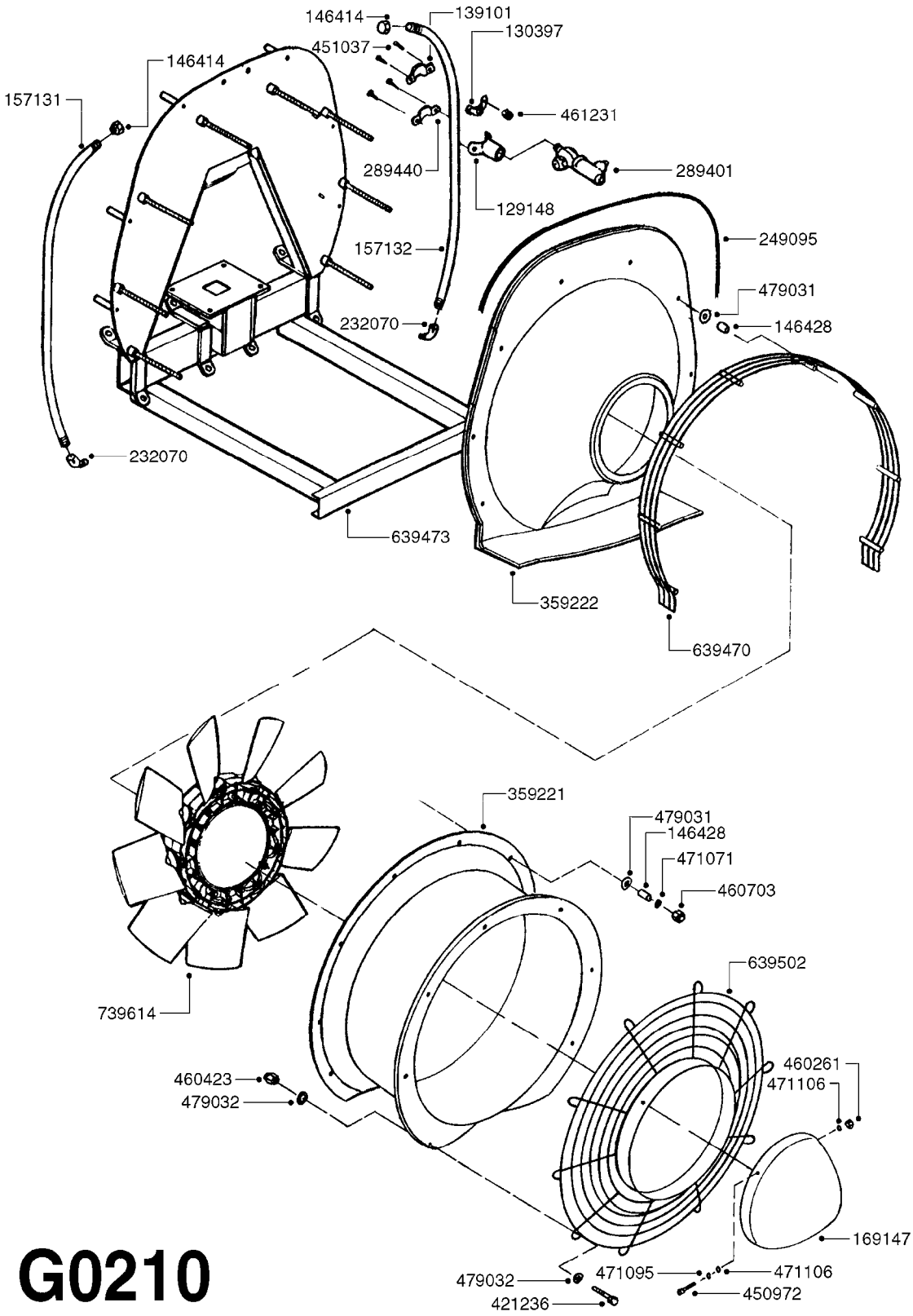

G0210

Agroparts: www.HARDI-INTERNATIONAL.com

ARROW - 30" BLOWER
G0210-HIN, 01:01:16

Date 12.08.2020 11:41

parts-n°	order qty	description
129148	1	CLAMP 20DGR. F/NOZZLE HOLDER BRASS
130397	1	NOZZLE HOLDER UPPER PART
139101	1	NOZZLE CLAMP F. MERCURY
146414	1	TERMINATION STOPPER 22 X 100
146428	1	DISTANCE RING D 25 X 5
157131	1	BLOWER SPR. LINE ARROW - RH
157132	1	BLOWER SPR. LINE ARROW - LH
169147	1	COWLING FOR BLOWER
232070	1	ELBOW 1/2" BRASS M-22.100 H
249095	1	SEAL F.ARROW BLOWER
289401	1	JET 1/4" DOUBLE alt 70009602
289440	1	CLAMP F. 1/4" NOZZLE HOLDERS
359221	1	FAN HOUSING 30" W/O AIR VANES
359222	1	CONE FOR 30" FAN
421236	1	BOLT HEX M10X25 GALV.
450972	1	SCREW M6X15 ALLEN GALV.
451037	1	SCREW M6X20 HEX
460261	1	NUT HEX M6X1.00 LOCK DIN985 A2 SS
460423	1	NUT HEX M10X1.50 LOCK DIN985A2 SS
460703	1	NUT HEX M12X1.75 LOCK DIN985A2 SS
461231	1	NUT HEX M6 BRASS
471071	1	WASHER M12 GALV
471095	1	WASHER D6,4
471106	1	WASHER D6
479031	1	WASHER
479032	1	WASHER D.10,5x30x2,5 DIN-9021
639470	1	SAFETY GRILL F.30" BLOWER
639473	1	ARROW FAN FRAME
639502	1	SAFETY GRILL F35 ARROW BLOWER
739614	1	FAN - AXIAL 30"

ARROW/BRAVO SPV 22" BLOWER
G0220-HIN, 01:01:16

Date 12.08.2020 11:41

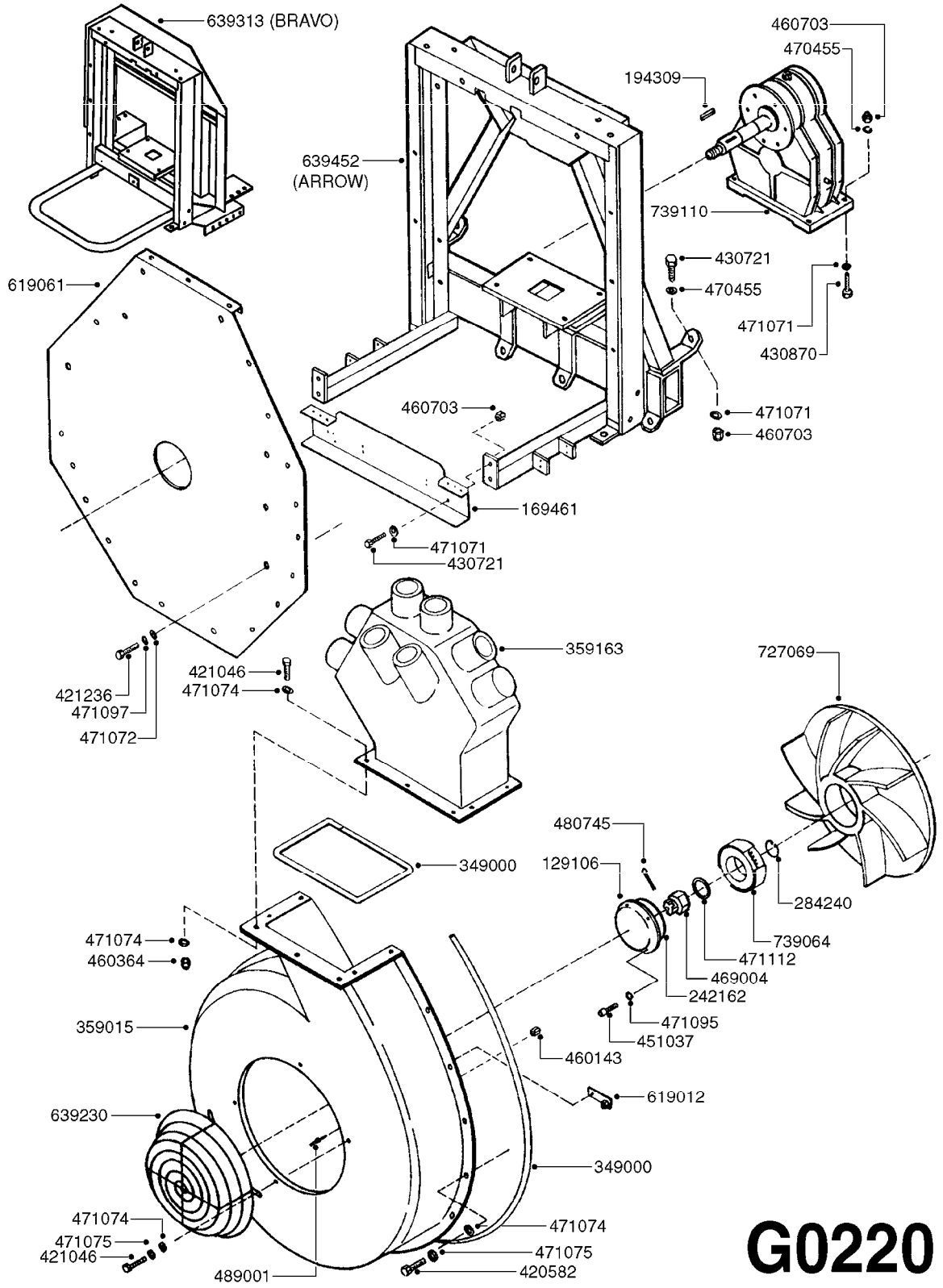

G0220

Agroparts: www.HARDI-INTERNATIONAL.com

ARROW/BRAVO SPV 22" BLOWER
G0220-HIN, 01:01:16

Date 12.08.2020 11:41

parts-n°	order qty	description
129106	1	HUB CAP F. 540 FAN LP
169461	1	REAR BRACKET ARROW FAN FRAME
194309	1	KEY 8 X 7 X 40
242162	1	O-RING D140.5X134.5 X 3
284240	1	SNAP-RING OUTER 35X1.5
349000	1	SEAL FOR CANNON
359015	1	BLOWER HOUSING LP/TP
359163	1	AIR DIST. HOUSING
420582	1	BOLT HEX 8.8 DEL M8X20 FT A2
421046	1	BOLT HEX M8X25/25 A2 SS DIN933
421236	1	BOLT HEX M10X25 GALV.
430721	1	BOLT HEX 8.8 DEL M12X40 FT
430870	1	BOLT HEX 8.8 DEL M12X55 FT
451037	1	SCREW M6X20 HEX
460143	1	LOCK NUT M8 SST A2 DIN985
460364	1	NUT HU M8 A2 SS DIN934
460703	1	NUT HEX M12X1.75 LOCK DIN985A2 SS
469004	1	M-20 SPECIAL NUT
470455	1	WASHER D12 SPRING
471071	1	WASHER M12 GALV
471072	1	WASHER M10 EL2
471074	1	WASHER M8 ELZ
471075	1	WASHER M8 LOCK
471095	1	WASHER D6,4
471097	1	WASHER D10 SAFETY
471112	1	WASHER D20
480745	1	PIN MD4X50 SPLIT
489001	1	RIVET 4X20 AL.
619012	1	STEEL PLATE W/NUT M-8 TURBO
619061	1	PLATE BASE ZATURN
639230	1	AIR GRID PROTECTOR P540
639313	1	BRAVO FAN FRAME 22" SPV
639452	1	ARROW FAN FRAME 22" SPV
727069	1	CENTRIFUG WHEEL 540 alt 739994
739064	1	CENTRIFUGAL CLUTCH F.LP D130
739110	1	GEARBOX ARROW/BRAVO 22" SPV

ARROW - SPV 16" MAXI BLOWER
G0230-HIN, 01:01:16

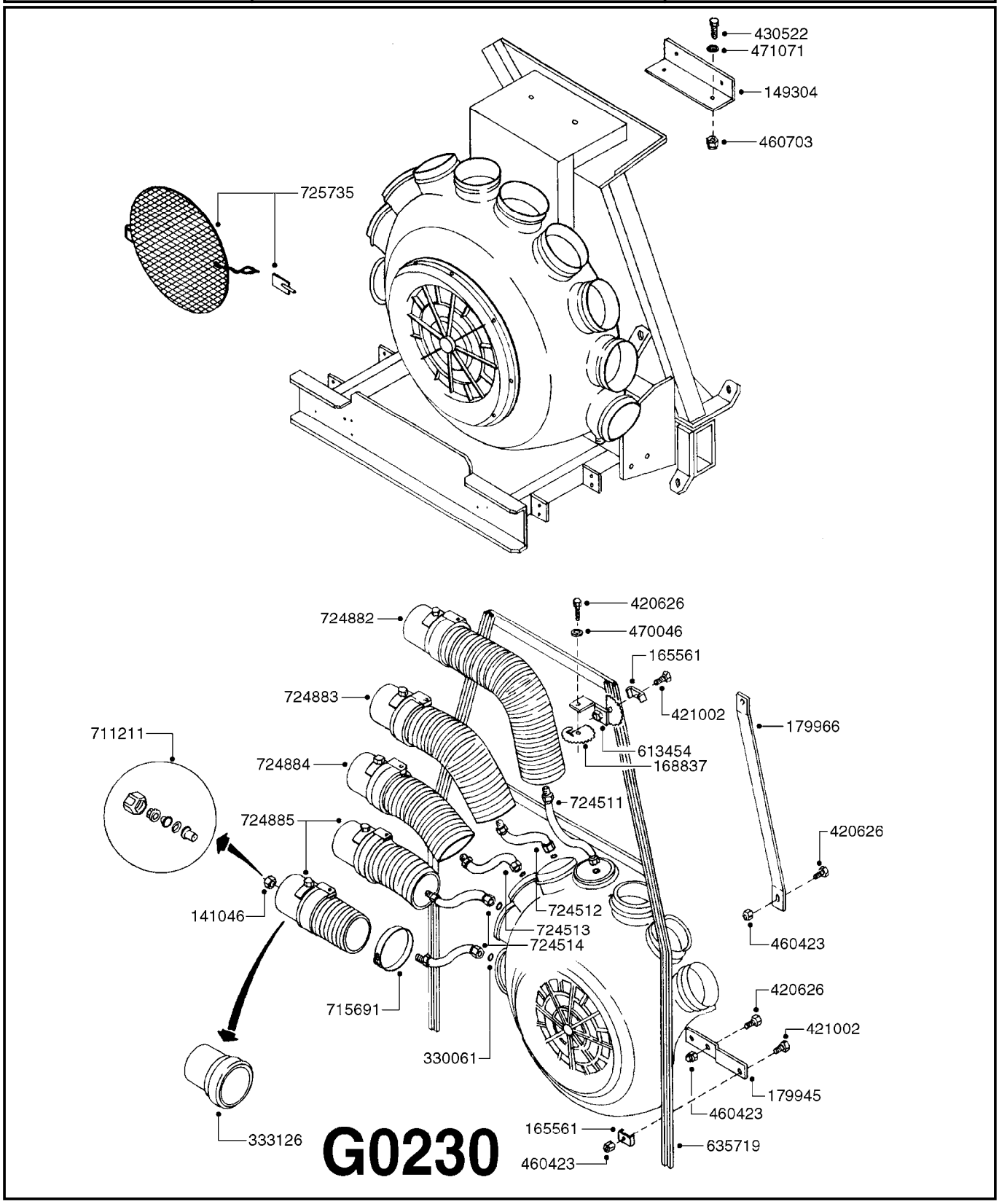

Agroparts: www.HARDI-INTERNATIONAL.com

ARROW - SPV 16" MAXI BLOWER
G0230-HIN, 01:01:16

Date 12.08.2020 11:41

parts-n°	order qty	description
141046	1	NUT 3/8" BSP
149304	1	BRACKET F.TANGO SPV
165561	1	LOCKING PLATE
168837	1	GUIDE F.ADJ.SPOUT LH
179945	1	BRACKET
179966	1	MOUNTING BRACKET FOR MINI SPV
330061	1	O-RING D16/D11X2,5
333126	1	MOUTH PIECE F.5' HOSE
420626	1	BOLT HEX 8.8 DEL M10X20 FT
421002	1	BOLT HEX 8.8 DEL M10X30 FT DIN933
430522	1	BOLT HEX 8.8 DEL M12X25 FT
460423	1	NUT HEX M10X1.50 LOCK DIN985A2 SS
460703	1	NUT HEX M12X1.75 LOCK DIN985A2 SS
470046	1	WASHER D18D11X1 LOCK
471071	1	WASHER M12 GALV
613454	1	SUSPENSION FOR ADJ. SPOUT MINI
635719	1	UPRIGHT MAXI SPV
711211	1	NOZZLE SET FOR MAXI BLOWER
715691	1	STRAP F.5"MOUNT.SPRG.HOSE
724511	1	HOSE 3/8"X1010
724512	1	HOSE 3/8"X800
724513	1	HOSE 3/8"X350
724514	1	HOSE 3/8"X275MAXI-SPV
724882	1	HOSE SPIRAL 5'X960-D110
724883	1	HOSE SPIRAL 5'X750-D110
724884	1	HOSE SPIRAL 5'X300-D110
724885	1	HOSE SPIRAL 5'X225-D110
725735	1	PROTECTION GRATE COMP MAXI

ARROW - SPV 16" MAXI FAN/GRBX
G0240-HIN, 01:01:16

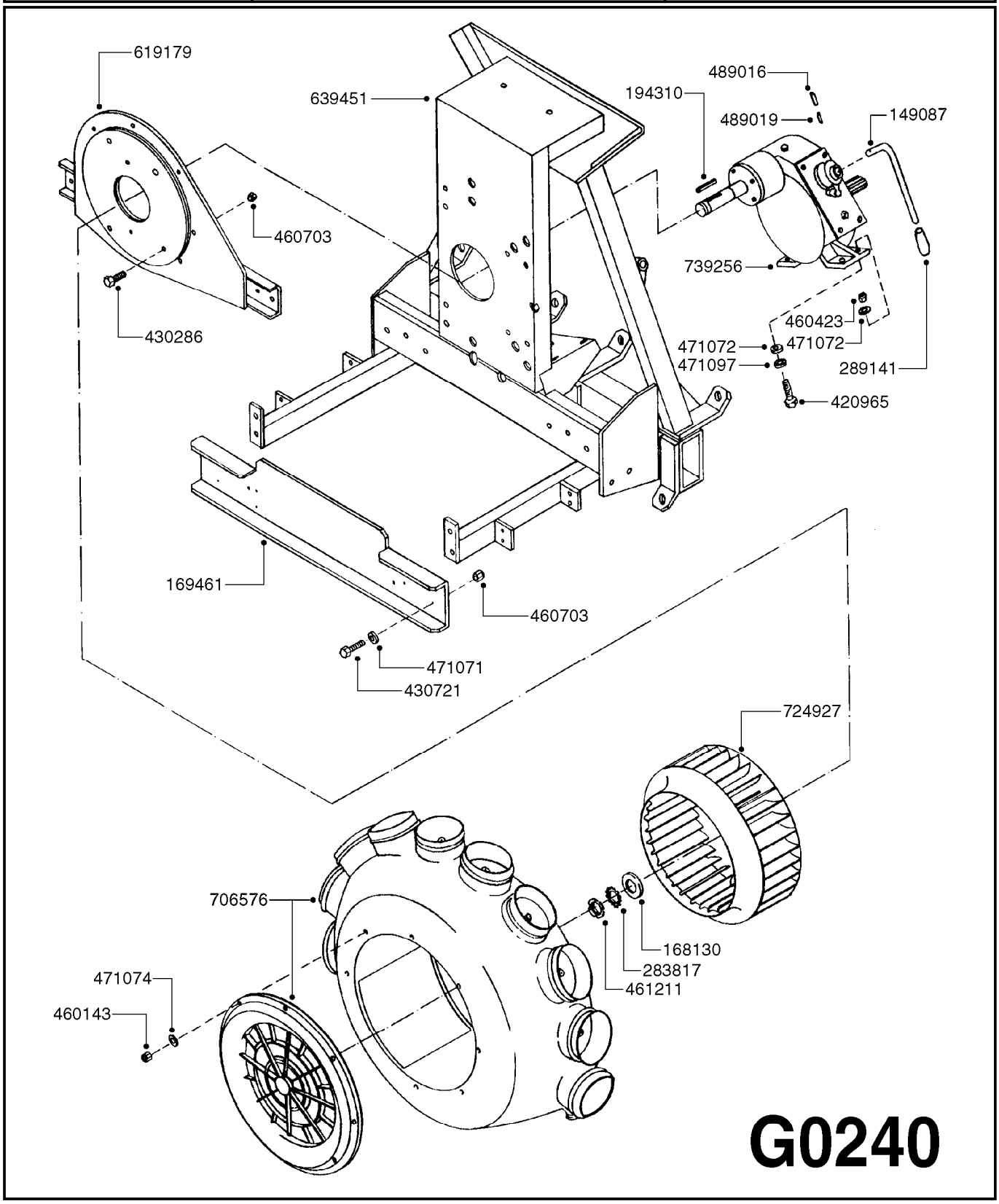

Agroparts: www.HARDI-INTERNATIONAL.com

ARROW - SPV 16" MAXI FAN/GRBX
G0240-HIN, 01:01:16

Date 12.08.2020 11:41

parts-n°	order qty	description
149087	1	HANDLE LE-650/750
168130	1	WASHER F.BLOWER MAXI TR 600
169461	1	REAR BRACKET ARROW FAN FRAME
194310	1	KEY 10 X 8 X 55
283817	1	WASHER LOCK D30 MB6
289141	1	HANDLE M-8
420965	1	M10X40 MACHINE SCREW STAINLESS
430286	1	BOLT HEX 8.8 DEL M12X30 FT
430721	1	BOLT HEX 8.8 DEL M12X40 FT
460143	1	LOCK NUT M8 SST A2 DIN985
460423	1	NUT HEX M10X1.50 LOCK DIN985A2 SS
460703	1	NUT HEX M12X1.75 LOCK DIN985A2 SS
461211	1	NUT M30X1.5 SKF W/CUT
471071	1	WASHER M12 GALV
471072	1	WASHER M10 EL2
471074	1	WASHER M8 ELZ
471097	1	WASHER D10 SAFETY
489016	1	SLOTTED PIN D.3X20
489019	1	SLOTTED PIN D.5X20
619179	1	BRACKET F.BLOWER F-400 SPV
639451	1	ARROW FAN FRAME 16" MAXI
706576	1	BLOWER HOUSING FOR MAXI
724927	1	FAN WHEEL ASSY.MAXI 600
739256	1	GEAR BOX F. LE-SPV & TG

MERCURY - 36" AXIAL FAN
G0250-HIN, 01:01:16

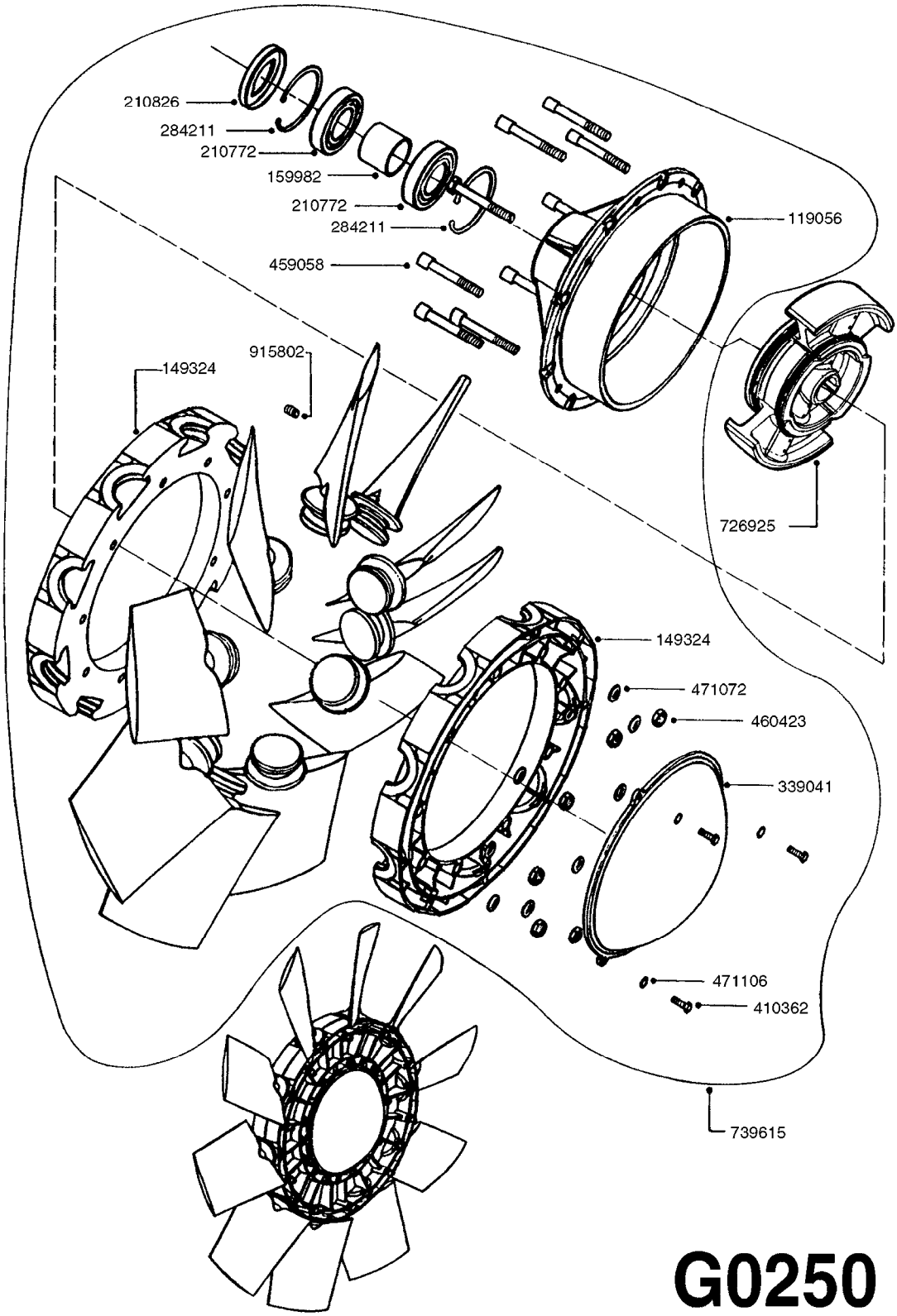

G0250

Agroparts: www.HARDI-INTERNATIONAL.com

MERCURY - 36" AXIAL FAN
G0250-HIN, 01:01:16

Date 12.08.2020 11:41

parts-n°	order qty	description
119056	1	CENTER WHEEL F.30"/32" FAN
149324	1	FLANGE F.CENTER WHEEL 36"
159982	1	DISTANCE TUBE FOR 820
210772	1	BALL BEARING 6208 2RS1
210826	1	SEAL OIL 45 X 10
284211	1	SNAP-RING INNER 80X2.5
339041	1	CAP FOR FAN
410362	1	BOLT HEX 8.8 SS M6X20
459058	1	ALLEN SCREW M10X80
460423	1	NUT HEX M10X1.50 LOCK DIN985A2 SS
471072	1	WASHER M10 EL2
471106	1	WASHER D6
726925	1	CENTRIFUGAL CLUTCH D. 245
739615	1	FAN - AXIAL 36"
915802	1	SET SCREW DIN 913 6X6

MERCURY - 36" AXIAL FAN '05
G0260-HIN, 01:01:16

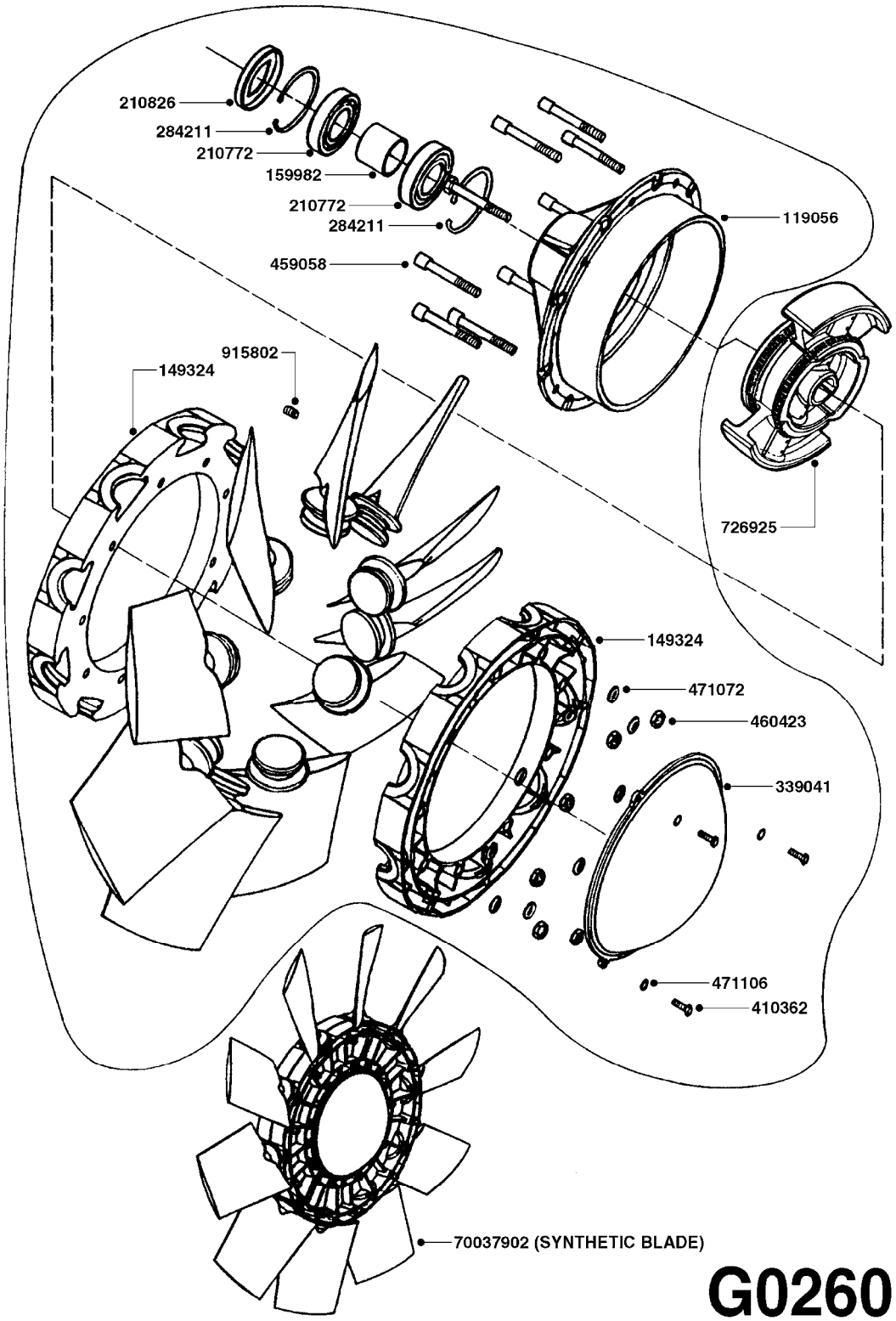

G0260

Agroparts: www.HARDI-INTERNATIONAL.com

MERCURY - 36" AXIAL FAN '05
G0260-HIN, 01:01:16

Date 12.08.2020 11:41

parts-n°	order qty	description
119056	1	CENTER WHEEL F.30"/32" FAN
149324	1	FLANGE F.CENTER WHEEL 36"
159982	1	DISTANCE TUBE FOR 820
210772	1	BALL BEARING 6208 2RS1
210826	1	SEAL OIL 45 X 10
284211	1	SNAP-RING INNER 80X2.5
339041	1	CAP FOR FAN
410362	1	BOLT HEX 8.8 SS M6X20
459058	1	ALLEN SCREW M10X80
460423	1	NUT HEX M10X1.50 LOCK DIN985A2 SS
471072	1	WASHER M10 EL2
471106	1	WASHER D6
726925	1	CENTRIFUGAL CLUTCH D. 245
915802	1	SET SCREW DIN 913 6X6
70037902	1	FAN - AXIAL 36" POLY

MERCURY - 36" AXIAL GEARBOX
G0270-HIN, 01:01:16

Date 12.08.2020 11:41

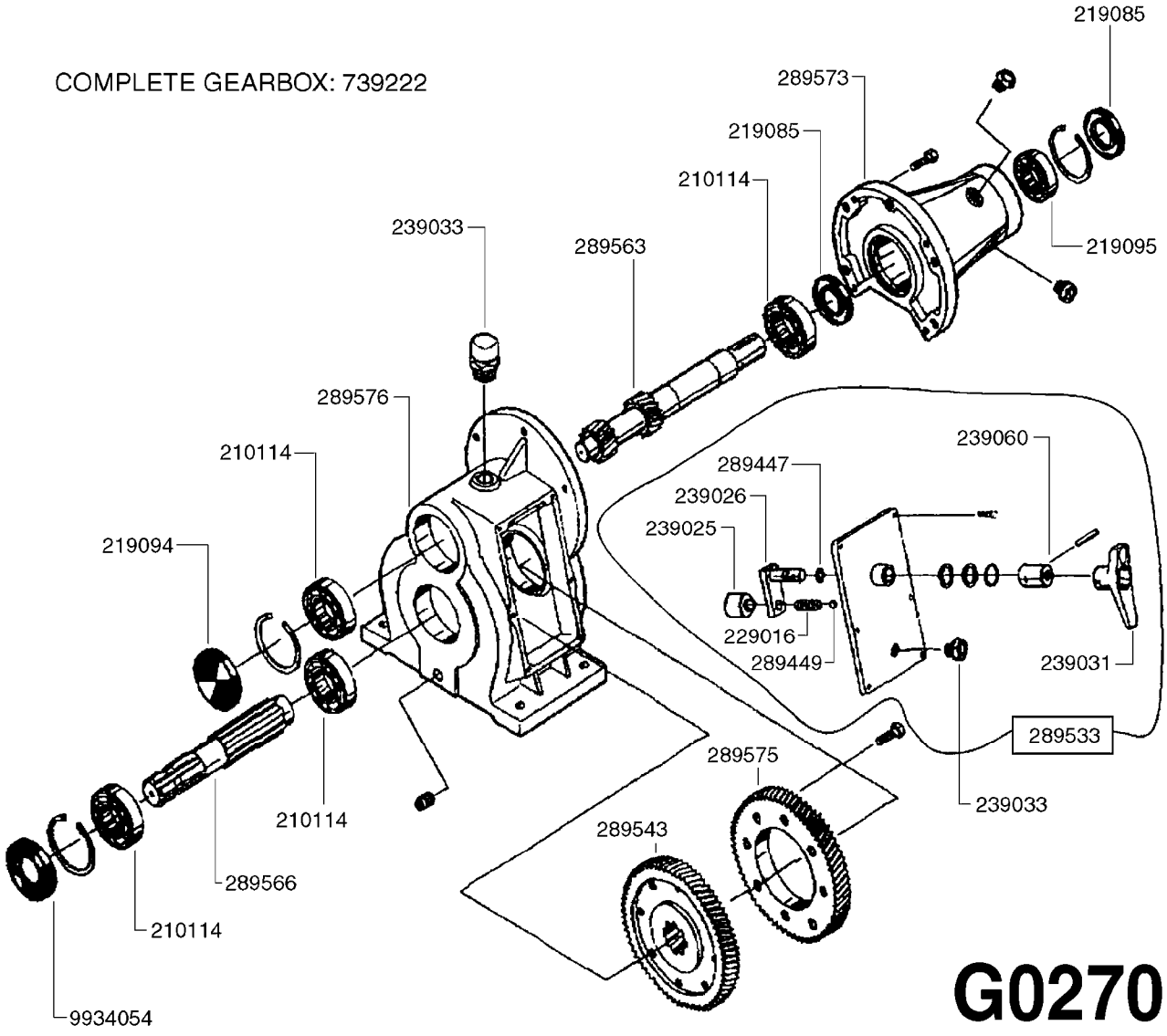

Agroparts: www.HARDI-INTERNATIONAL.com

MERCURY - 36" AXIAL GEARBOX
G0270-HIN, 01:01:16

Date 12.08.2020 11:41

parts-n°	order qty	description
210114	1	BEARING BALL 6308
219085	1	OIL SEAL 40X80X10 BIMA M55
219094	1	SEAL BLIND 90 X 10
219095	1	BALL BEARING 2208 MP
229016	1	SPRING 16X7.8X1 F. 289533
239025	1	BLOCK F.LEVER GEARBOX
239026	1	LIFTER F.GEAR BOX
239031	1	HANDLE F.GEARBOX
239033	1	OIL LEVEL GLASS
239060	1	BUSHING F.HANDLE GEARBOX
289447	1	O-RING F.GEAR BOX
289449	1	BALL 5/16" M10
289533	1	COVER&HANDLE ASSY.F.M55
289543	1	TOOTHWHEEL F/ GEARBOX
289563	1	SHAFT
289566	1	SHAFT SPLINED F.GEAR BOX M55
289573	1	EXTENSION
289575	1	GEAR
289576	1	HOUSING
739222	1	GEAR BOX M55
9934054	1	OIL SEALING RING 40X90X10

MERCURY - 32" AXIAL FAN
G0280-HIN, 01:01:16

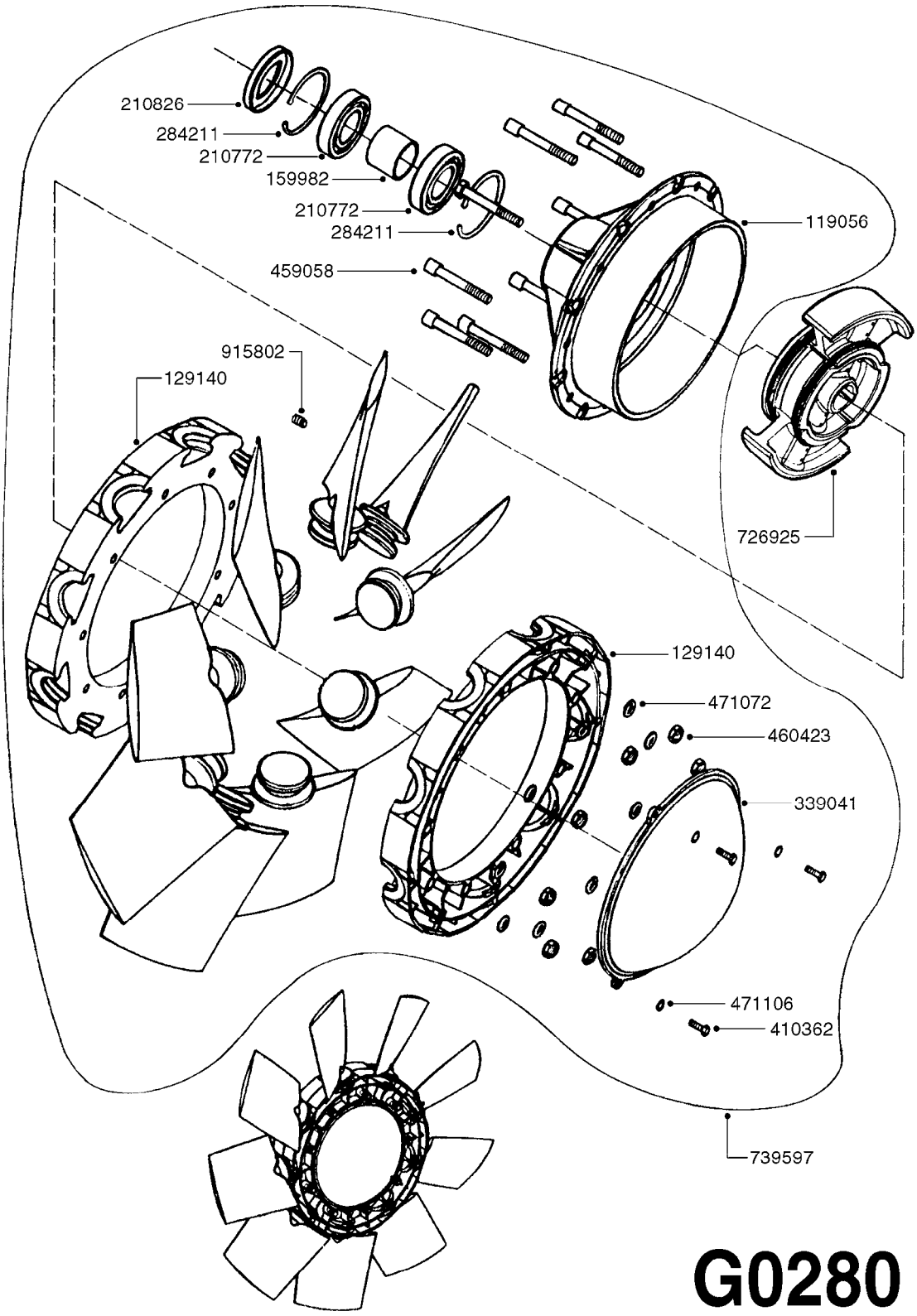

G0280

Agroparts: www.HARDI-INTERNATIONAL.com

MERCURY - 32" AXIAL FAN
G0280-HIN, 01:01:16

Date 12.08.2020 11:41

parts-n°	order qty	description
119056	1	CENTER WHEEL F.30"/32" FAN
129140	1	FLANGE F.CENTER WHEEL 30"/32"
159982	1	DISTANCE TUBE FOR 820
210772	1	BALL BEARING 6208 2RS1
210826	1	SEAL OIL 45 X 10
284211	1	SNAP-RING INNER 80X2.5
339041	1	CAP FOR FAN
410362	1	BOLT HEX 8.8 SS M6X20
459058	1	ALLEN SCREW M10X80
460423	1	NUT HEX M10X1.50 LOCK DIN985A2 SS
471072	1	WASHER M10 EL2
471106	1	WASHER D6
726925	1	CENTRIFUGAL CLUTCH D. 245
739597	1	FAN - AXIAL 32"
915802	1	SET SCREW DIN 913 6X6

MERCURY - 32" AXIAL FAN '05
G0290-HIN, 01:01:16

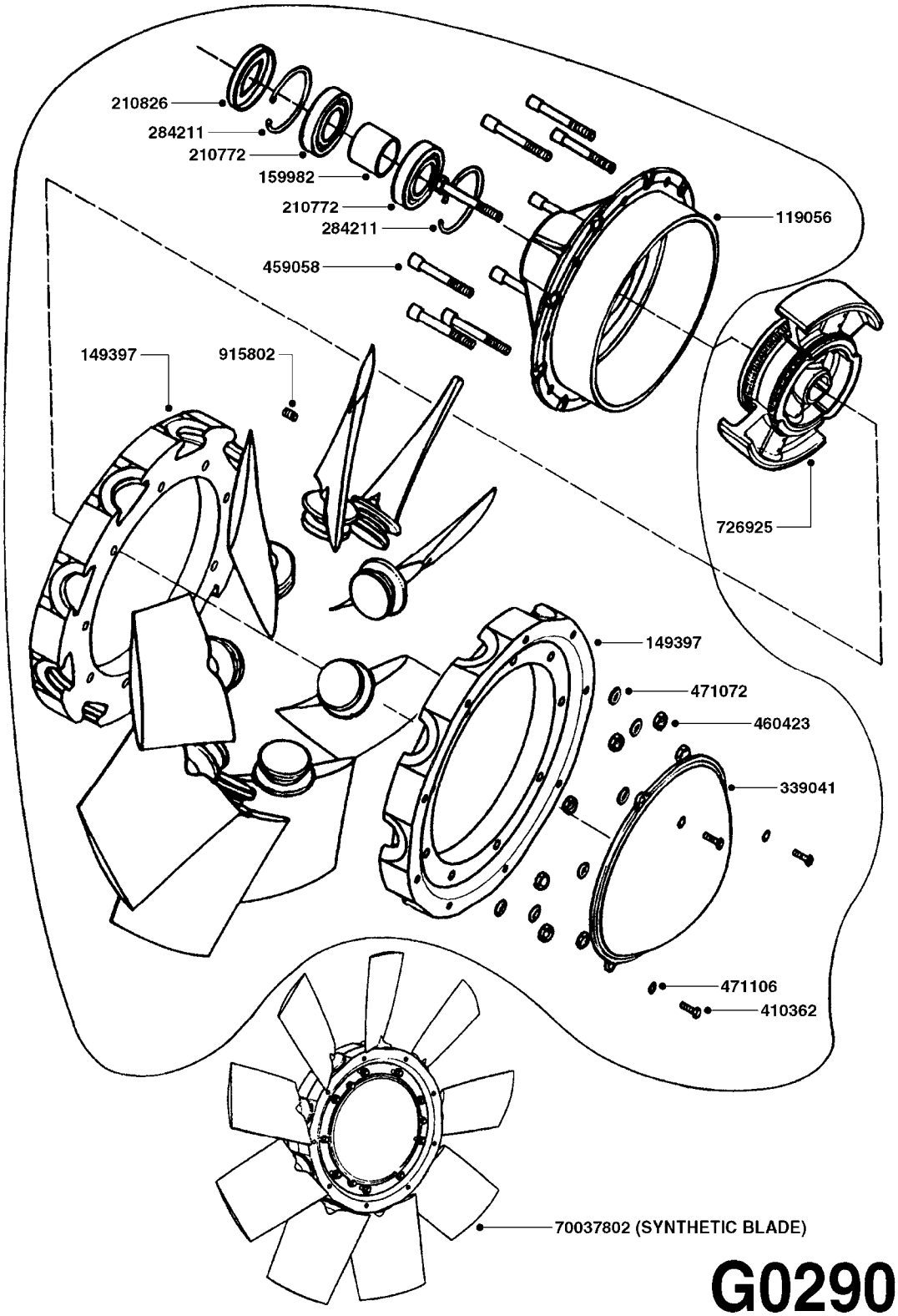

G0290

Agroparts: www.HARDI-INTERNATIONAL.com

MERCURY - 32" AXIAL FAN '05
G0290-HIN, 01:01:16

Date 12.08.2020 11:41

parts-n°	order qty	description
119056	1	CENTER WHEEL F.30"/32" FAN
149397	1	FLANGE F.CENTER WHEEL 30"/32"
159982	1	DISTANCE TUBE FOR 820
210772	1	BALL BEARING 6208 2RS1
210826	1	SEAL OIL 45 X 10
284211	1	SNAP-RING INNER 80X2.5
339041	1	CAP FOR FAN
410362	1	BOLT HEX 8.8 SS M6X20
459058	1	ALLEN SCREW M10X80
460423	1	NUT HEX M10X1.50 LOCK DIN985A2 SS
471072	1	WASHER M10 EL2
471106	1	WASHER D6
726925	1	CENTRIFUGAL CLUTCH D. 245
915802	1	SET SCREW DIN 913 6X6
70037802	1	FAN - AXIAL 32" POLY

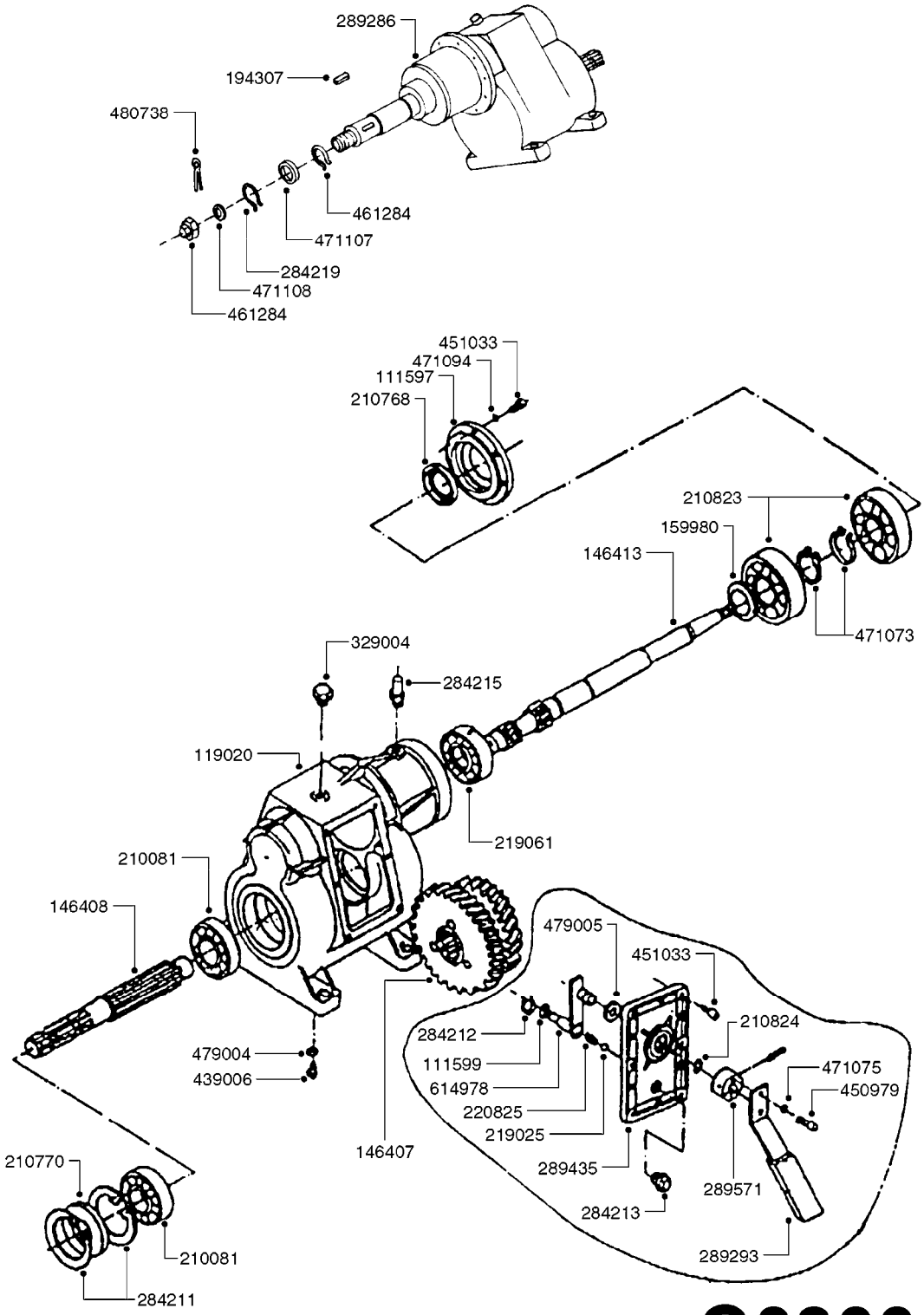
289286
194307
480738
461284
471107
284219
471108
461284
451033
471094
111597
210768
210823
159980
146413
471073
329004
284215
119020
219061
210081
146408
479005
451033
210824
284212
111599
614978
220825
219025
471075
450979
479004
439006
146407
289435
289571
284213
289293
210770
210081
284211

G0300

Agroparts: www.HARDI-INTERNATIONAL.com

MERCURY - 26" DOUBLE CENT.GRBX
G0300-HIN, 01:01:16

Date 12.08.2020 11:41

parts-n°	order qty	description
111597	1	FLANGE FOR GEAR BOX
111599	1	HEAD FOR CHANGE OF GEAR
119020	1	BOTTOM PART FOR GEAR-BOX
146407	1	TOOTHED WHEEL Z 42/Z 44
146408	1	SHAFT FOR GEAR BOX QUICK
146413	1	SHAFT F/GEAR BOX F/MODEL TE
159980	1	DISTANCE TUBE
194307	1	KEY 10 X 8 X 40
210081	1	BEARING BALL 6307
210768	1	SEAL OIL 65 X 45 X 10
210770	1	SEAL OIL 80 X 35 X 12
210823	1	BALL BEARING 6309
210824	1	SEAL OIL 18 X 7
219025	1	BALL D15 STAINLESS
219061	1	BALL BEARING
220825	1	SPRING F.GEAR CHANGE
284211	1	SNAP-RING INNER 80X2.5
284212	1	SNAP-RING OUTER 10X1
284213	1	OIL LEVEL GLASS 3/8" BSP
284215	1	BREATHER THREAD IN
284219	1	SNAP-RING OUTER 40X1.75
289286	1	GEARBOX 2-MAXI & 820-X
289293	1	LEVER, GEARBOX SHIFT
289435	1	COVER GEARBOX SHIFT
289571	1	HUB SHIFT HANDLE
329004	1	PLUG F.OIL HOLE GEARBOX F.SPV
439006	1	PLUG F.OIL HOLE GEARBOX F.LE
450979	1	SCREW M8X20 HEX
451033	1	SCREW M8X25 HEX
461284	1	NUT HEX M24X2 SLOTTED
471073	1	WASHER D18D12X2 COPPER
471075	1	WASHER M8 LOCK
471094	1	WASHER D8,4 STAR
471107	1	WASHER D50,6D40,1X5
471108	1	WASHER D44D25X4.5
479004	1	SEAL F.OIL PLUG GEARBOX LE
479005	1	WASHER D18 DIN 6916
480738	1	PIN D5X40 SPLIT
614978	1	GEAR CHANGE

	Agroparts: www.HARDI-INTERNATIONAL.com	
HARDI	MERCURY - 26" DOUBLE BLOWER G0310-HIN, 01:01:16	Page 0 Date 12.08.2020 11:41

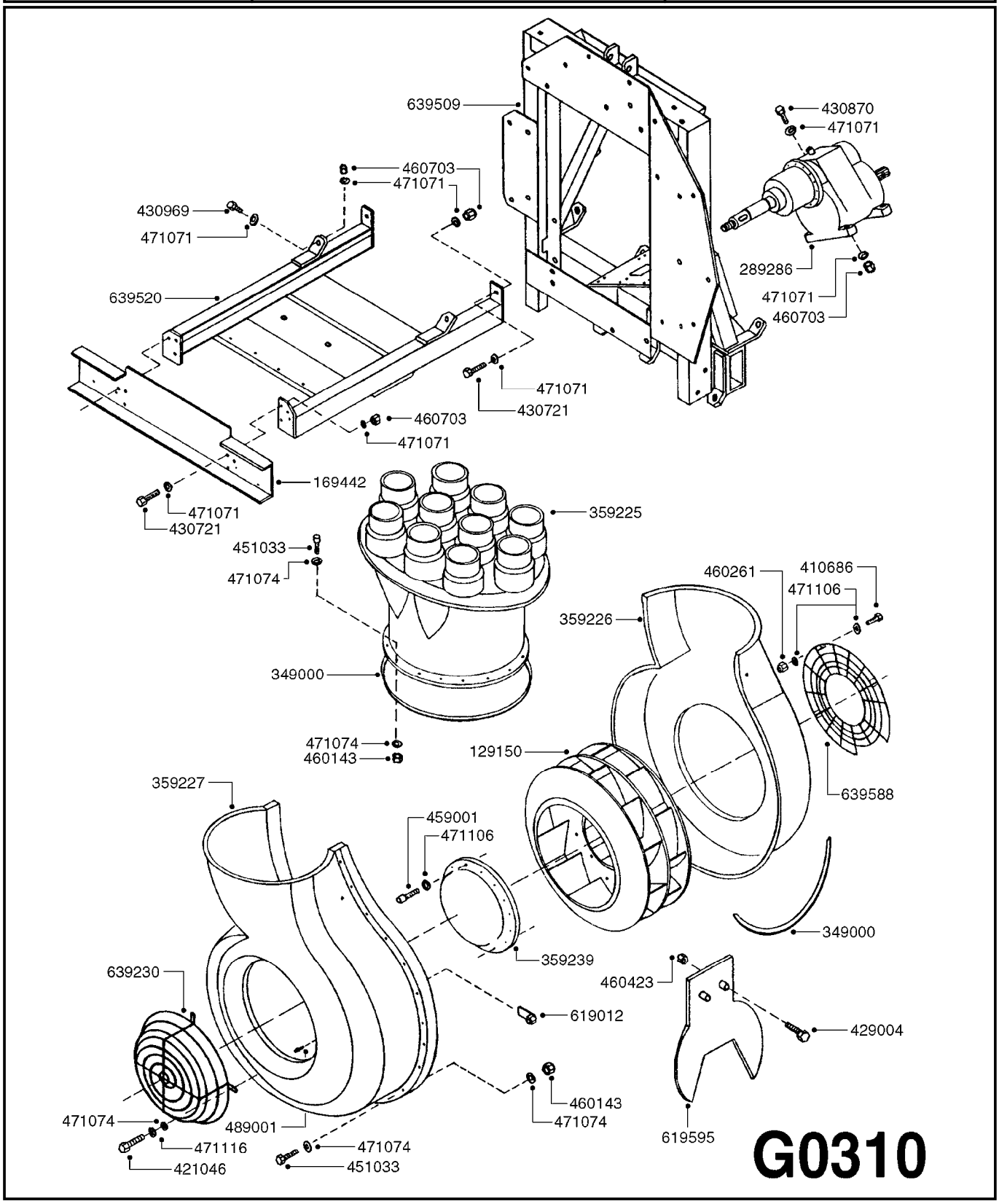

Agroparts: www.HARDI-INTERNATIONAL.com

MERCURY - 26" DOUBLE BLOWER
G0310-HIN, 01:01:16

Date 12.08.2020 11:41

parts-n°	order qty	description
129150	1	BLOWER WHEEL HF600D ALUMINUM
169442	1	REAR BRACKET MERCURY FAN FRAME
289286	1	GEARBOX 2-MAXI & 820-X
349000	1	SEAL FOR CANNON
359225	1	AIR DIST. HOUSING 26" DOUBLE
359226	1	BLOWER HOUSING FRONT 26"DOUBLE
359227	1	BLOWER HOUSING REAR 26"DOUBLE
359239	1	CAP FOR 26" FAN
410686	1	BOLT HEX 8.8 DEL M6X30
421046	1	BOLT HEX M8X25/25 A2 SS DIN933
429004	1	BOLT HEX M10X35 GALV.
430721	1	BOLT HEX 8.8 DEL M12X40 FT
430870	1	BOLT HEX 8.8 DEL M12X55 FT
430969	1	SCREW M12X60 CAP
451033	1	SCREW M8X25 HEX
459001	1	BOLT ALLEN M8X15 8.8
460143	1	LOCK NUT M8 SST A2 DIN985
460261	1	NUT HEX M6X1.00 LOCK DIN985 A2 SS
460423	1	NUT HEX M10X1.50 LOCK DIN985A2 SS
460703	1	NUT HEX M12X1.75 LOCK DIN985A2 SS
471071	1	WASHER M12 GALV
471074	1	WASHER M8 ELZ
471106	1	WASHER D6
471116	1	WASHER D8 TENSION
489001	1	RIVET 4X20 AL.
619012	1	STEEL PLATE W/NUT M-8 TURBO
619595	1	AIR ADJ.PLATE HF600D
639230	1	AIR GRID PROTECTOR P540
639509	1	MERCURY FAN FRAME 26" DOUBLE
639520	1	REAR FRAME FOR MERCURY FAN
639588	1	FRONT SAFETY GRILL 26" DOUBLE

	Agroparts: www.HARDI-INTERNATIONAL.com	
HARDI	MERCURY - 26" DOUBLE CENT.FAN G0320-HIN, 01:01:16	Page 0 Date 12.08.2020 11:41

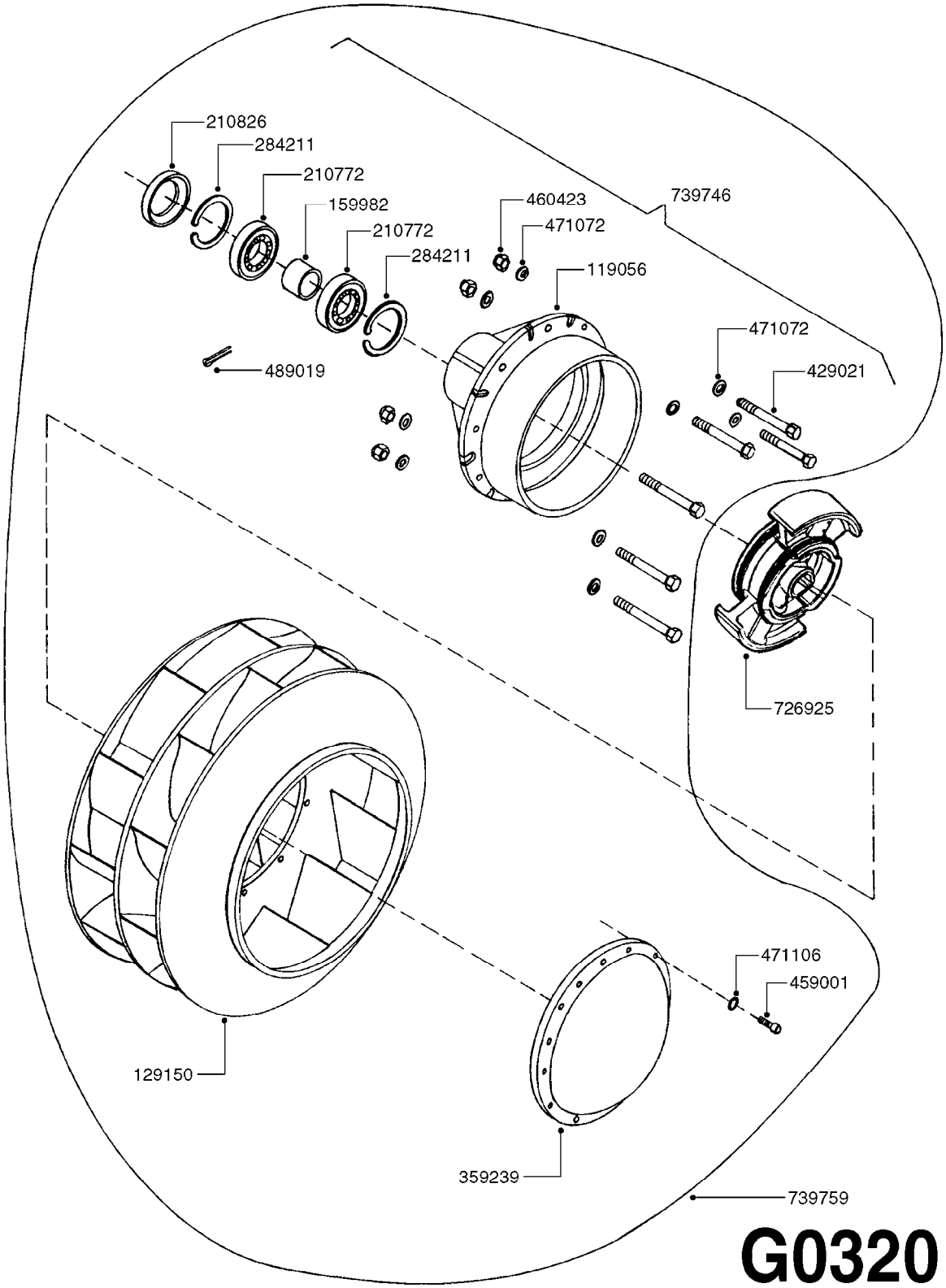

G0320

Agroparts: www.HARDI-INTERNATIONAL.com

MERCURY - 26" DOUBLE CENT.FAN
G0320-HIN, 01:01:16

Date 12.08.2020 11:41

parts-n°	order qty	description
119056	1	CENTER WHEEL F.30"/32" FAN
129150	1	BLOWER WHEEL HF600D ALUMINUM
159982	1	DISTANCE TUBE FOR 820
210772	1	BALL BEARING 6208 2RS1
210826	1	SEAL OIL 45 X 10
284211	1	SNAP-RING INNER 80X2.5
359239	1	CAP FOR 26" FAN
429021	1	BOLT HEX 12.9 M10X35 DIN-933
459001	1	BOLT ALLEN M8X15 8.8
460423	1	NUT HEX M10X1.50 LOCK DIN985A2 SS
471072	1	WASHER M10 EL2
471106	1	WASHER D6
489019	1	SLOTTED PIN D.5X20
726925	1	CENTRIFUGAL CLUTCH D. 245
739746	1	HUB ASSEMBLY F.HF600D FAN
739759	1	FAN - CENTRIFUGAL 26" DOUBLE

NOZZLES - AXIAL JET 1/4 X 1
G0330-HIN, 01:01:16

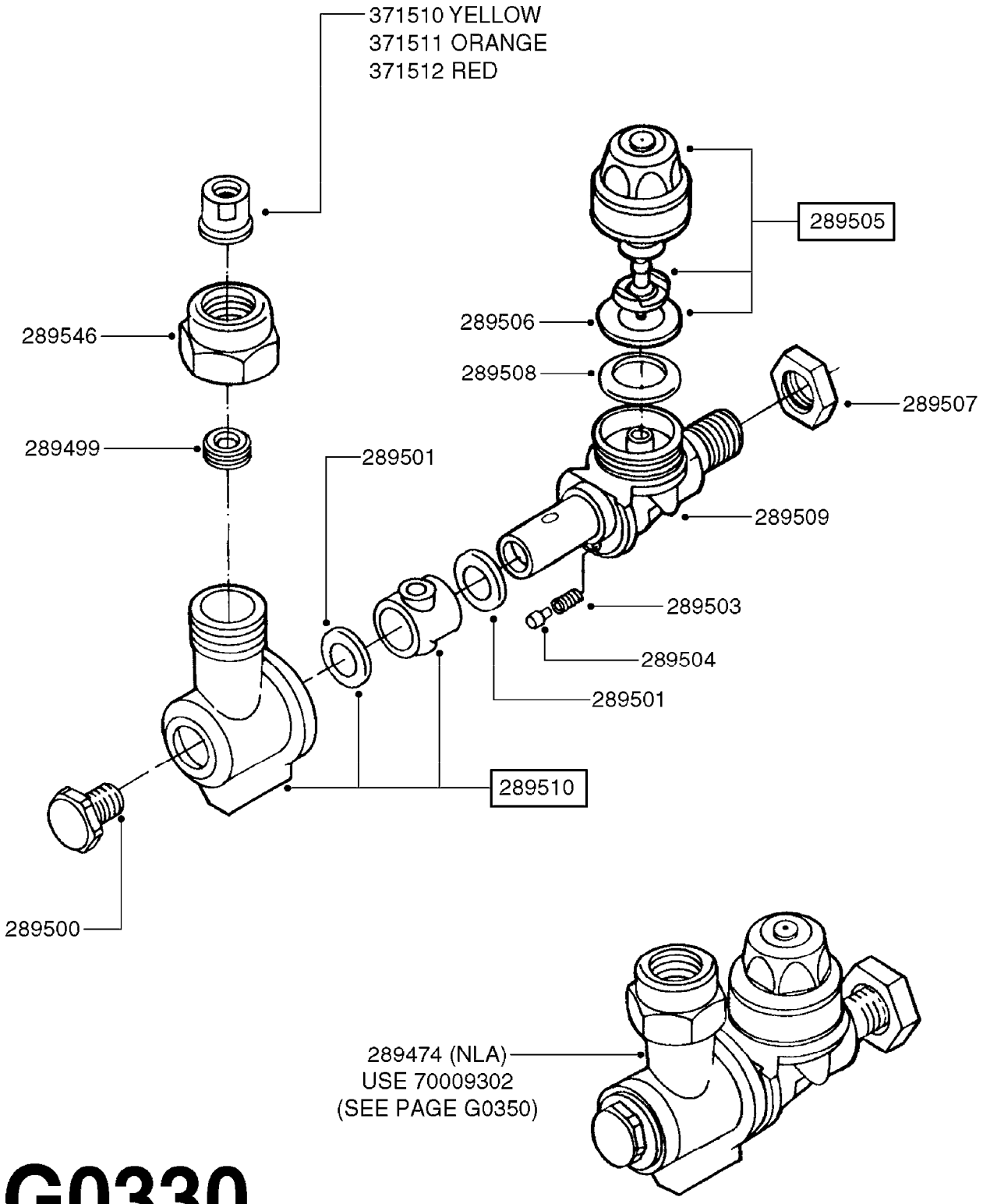

G0330

Agroparts: www.HARDI-INTERNATIONAL.com

NOZZLES - AXIAL JET 1/4 X 1
G0330-HIN, 01:01:16

Date 12.08.2020 11:41

parts-n°	order qty	description
289474	1	NOZZLE HOLDER SIMPLE, NON-DRIP
289499	1	NUT M11X1
289500	1	BOLT FOR NOZZLE HOLDER
289501	1	O-RING 11 X 2.5
289503	1	SPRING
289504	1	NOZZLE POSITION LOCK
289505	1	NON-DRIP ASSY.BRASS NOZ.HOLDER
289506	1	NON-DRIP DIAPHRAGM
289507	1	NUT
289508	1	O-RING/NOZZLE HOLDER NON-DRIP
289509	1	NOZZLE BODY
289510	1	SINGLE NOZZLE BODY
289546	1	NUT F.NOZZLE HOLDER ZENIT
371510	1	NOZZLE CONE JET 1299-12 YELLOW
371511	1	NOZZLE CONE JET 1299-14 ORANGE
371512	1	NOZZLE CONE JET 1299-16 RED
70009302	1	SINGLE NOZZLE HOLDER ZENIT

NOZZLES - AXIAL JET 1/4 X 2
G0340-HIN, 01:01:16

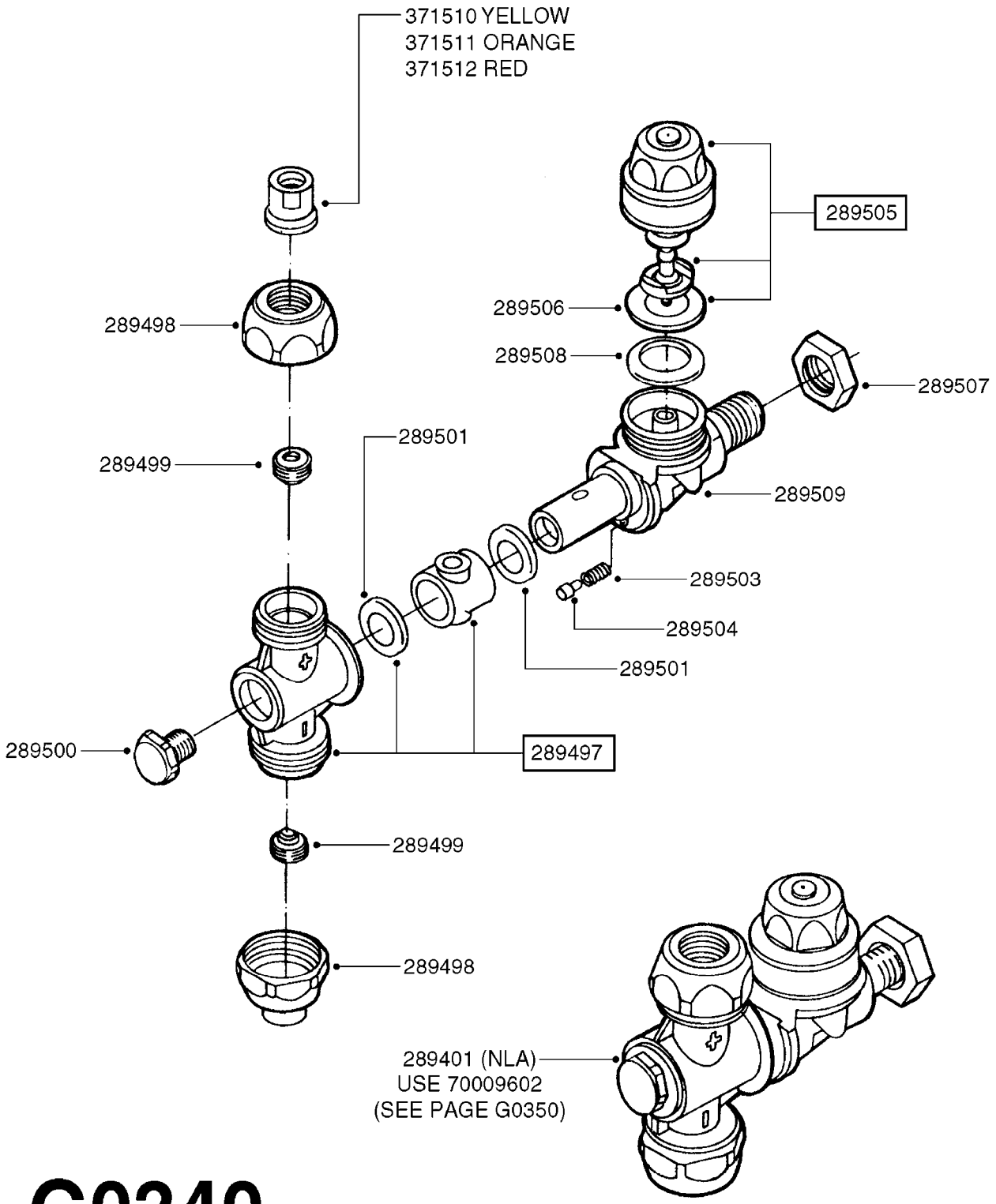

G0340

Agroparts: www.HARDI-INTERNATIONAL.com

NOZZLES - AXIAL JET 1/4 X 2
G0340-HIN, 01:01:16

Date 12.08.2020 11:41

parts-n°	order qty	description
289401	1	JET 1/4" DOUBLE alt 70009602
289497	1	NOZZLE HOLDER - DOUBLE
289498	1	NUT NOZZLE HOLDER
289499	1	NUT M11X1
289500	1	BOLT FOR NOZZLE HOLDER
289501	1	O-RING 11 X 2.5
289503	1	SPRING
289504	1	NOZZLE POSITION LOCK
289505	1	NON-DRIP ASSY.BRASS NOZ.HOLDER
289506	1	NON-DRIP DIAPHRAGM
289507	1	NUT
289508	1	O-RING/NOZZLE HOLDER NON-DRIP
289509	1	NOZZLE BODY
371510	1	NOZZLE CONE JET 1299-12 YELLOW
371511	1	NOZZLE CONE JET 1299-14 ORANGE
371512	1	NOZZLE CONE JET 1299-16 RED
70009602	1	DOUBLE NOZZLE HOLDER MR

NOZZLES - AXIAL JET STAINLESS
G0350-HIN, 01:01:16

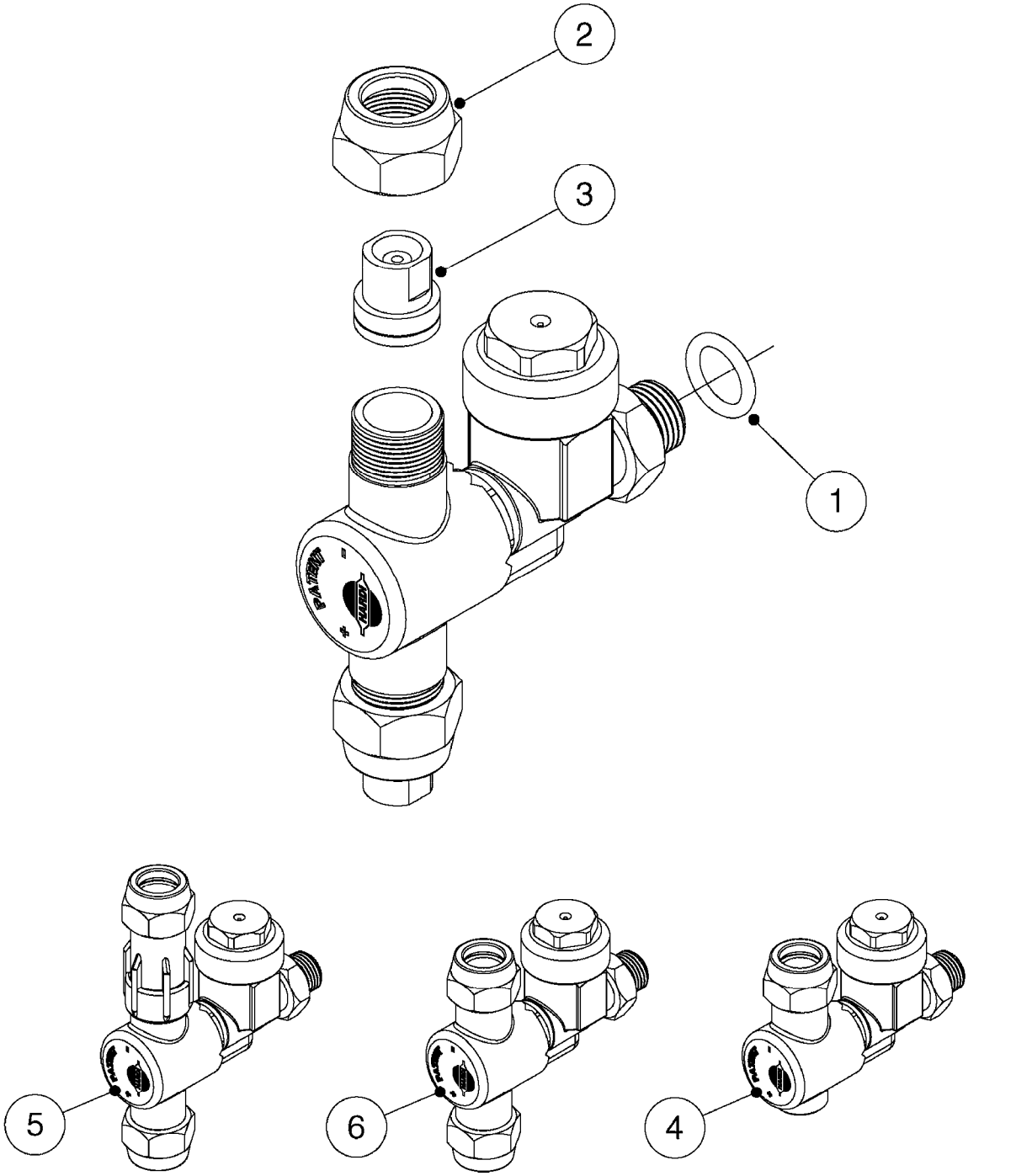

G0350

Agroparts: www.HARDI-INTERNATIONAL.com

NOZZLES - AXIAL JET STAINLESS
G0350-HIN, 01:01:16

Date 12.08.2020 11:41

Pos.	parts-nº	order qty	description
1	240177	1	O-RING D16.1/11.3 X 2.4
2	289546	1	NUT F.NOZZLE HOLDER ZENIT
3	371507	1	NOZZLE CONE JET 1299-06 WHITE
3	371508	1	NOZZLE CONE JET 1299-08 LILAC
3	371509	1	NOZZLE CONE JET 1299-10 BROWN
3	371510	1	NOZZLE CONE JET 1299-12 YELLOW
3	371511	1	NOZZLE CONE JET 1299-14 ORANGE
3	371512	1	NOZZLE CONE JET 1299-16 RED
3	371513	1	NOZZLE CONE JET 1299-18 GREEN
3	371514	1	NOZZLE CONE JET 1299-20 BLUE
3	371972	1	NOZZLE CONE JET 1299-17 GREY
3	371973	1	NOZZLE CONE JET 1299-19 BLACK
4	70009302	1	SINGLE NOZZLE HOLDER ZENIT
5	70009402	1	DOUBLE NOZZLE HOLDER ADJ.ARROW
6	70009602	1	DOUBLE NOZZLE HOLDER MR

NOZZLES - SINGLE & DOUBLE JETS
G0360-HIN, 01:01:16

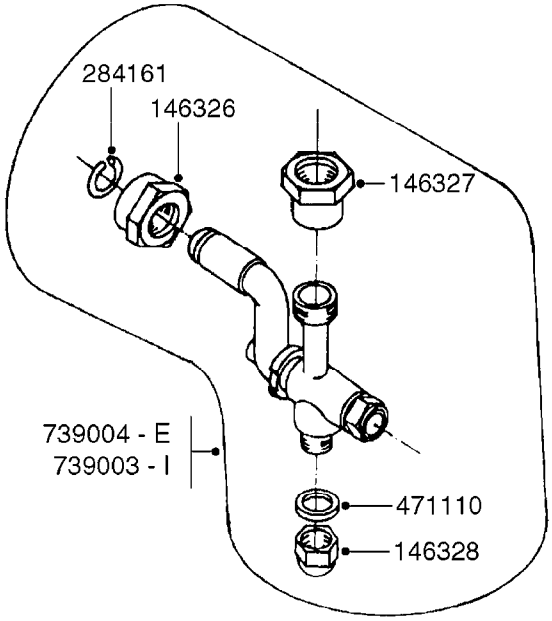

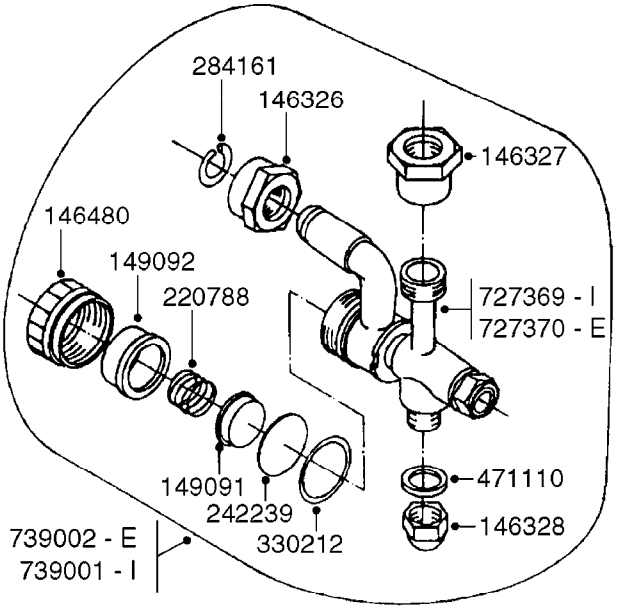

G0360

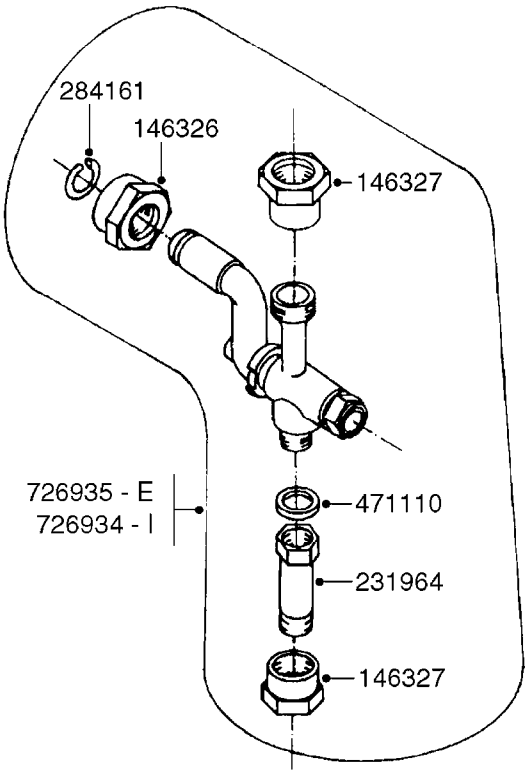

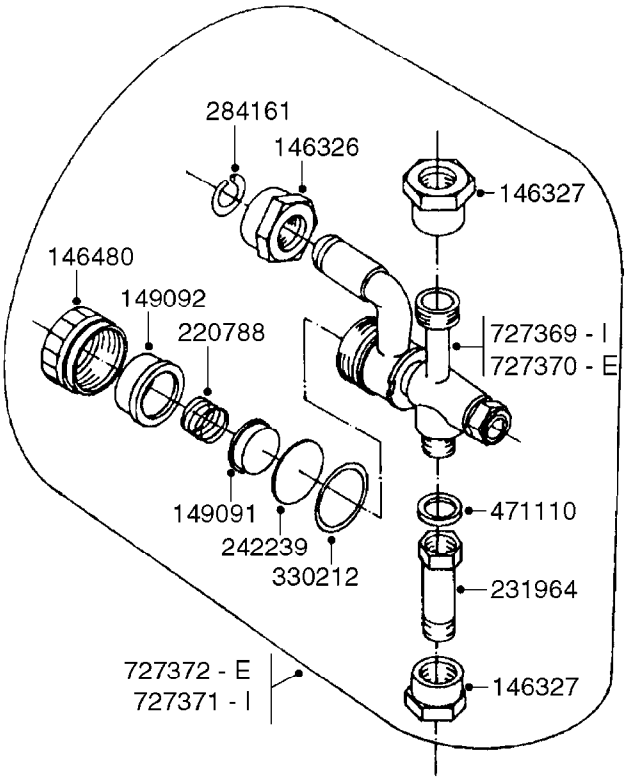

Agroparts: www.HARDI-INTERNATIONAL.com

NOZZLES - SINGLE & DOUBLE JETS
G0360-HIN, 01:01:16

Date 12.08.2020 11:41

parts-n°	order qty	description
146326	1	UNION NUT 1/2' BRASS
146327	1	UNION NUT 3/8' BRASS
146328	1	TOP NUT M12 BRASS
146480	1	END CAP FOR NZL TUBE
149091	1	INNER CAP FOR NON-DRIP
149092	1	NOZZLE CAP FOR NON-DRIP
220788	1	SPRING FOR NON-DRIP
231964	1	HEX NIPPLE
242239	1	MEMBRANE FOR NON DRIP
284161	1	RING STAINLESS SPRING TYPE
330212	1	O-RING D19/D14X2.4 F.1/2"NUT
471110	1	WASHER D18D12X2 COPPER
726934	1	DOUBLE NOZZLE HOLDER 'I'
726935	1	DOUBLE NOZZLEHOLDER D
727369	1	DOUBLE NON-DRIP NOZ.HOLDER - I
727370	1	DOUBLE NON-DRIP NOZ.HOLDER - E
727371	1	NOZZLE-MIST2 N-D I DOUBLE
727372	1	NOZZLE-MIST2 N-D E DOUBLE
739001	1	NOZZ.HOLDER SIMPLE"I" NON-DRIP
739002	1	SINGL.NOZ.HOLDER "D/E" NO-DRIP
739003	1	SINGLE NOZZLE HOLDER
739004	1	NOZZLE HOLDER SIMPLE ""D/E""

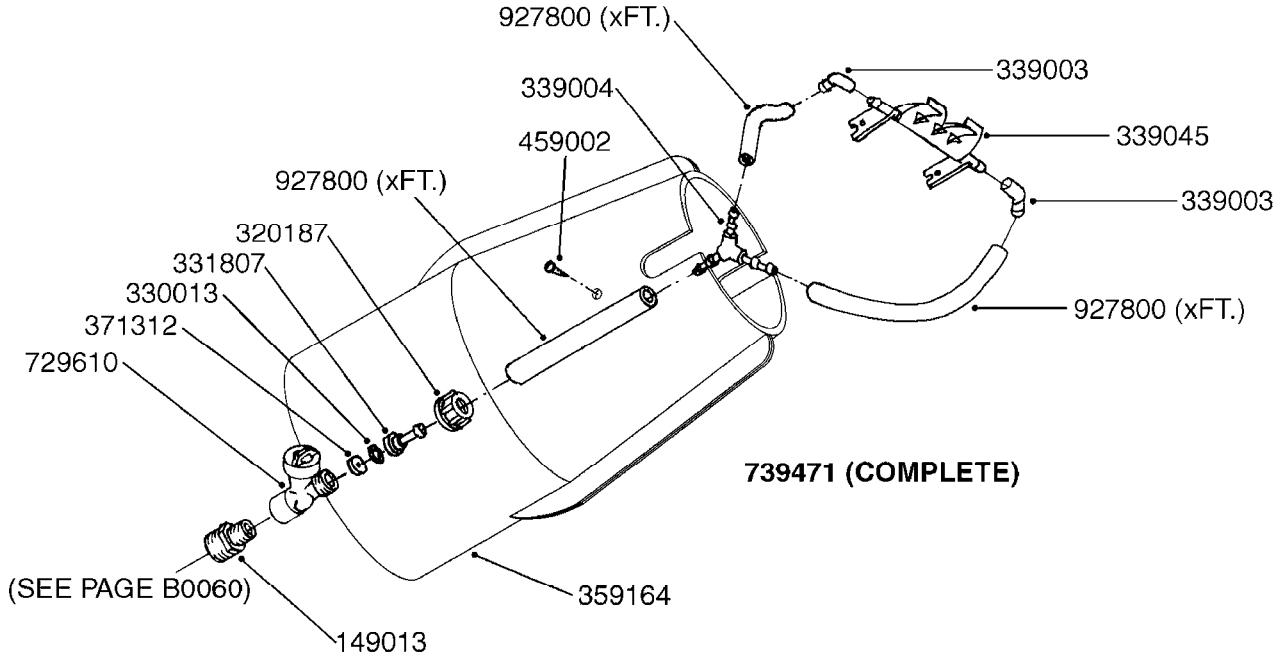
927800 (xFT.)
339003
339004
339045
459002
927800 (xFT.)
339003
320187
331807
330013
371312
927800 (xFT.)
729610
739471 (COMPLETE)
(SEE PAGE B0060)
359164
149013

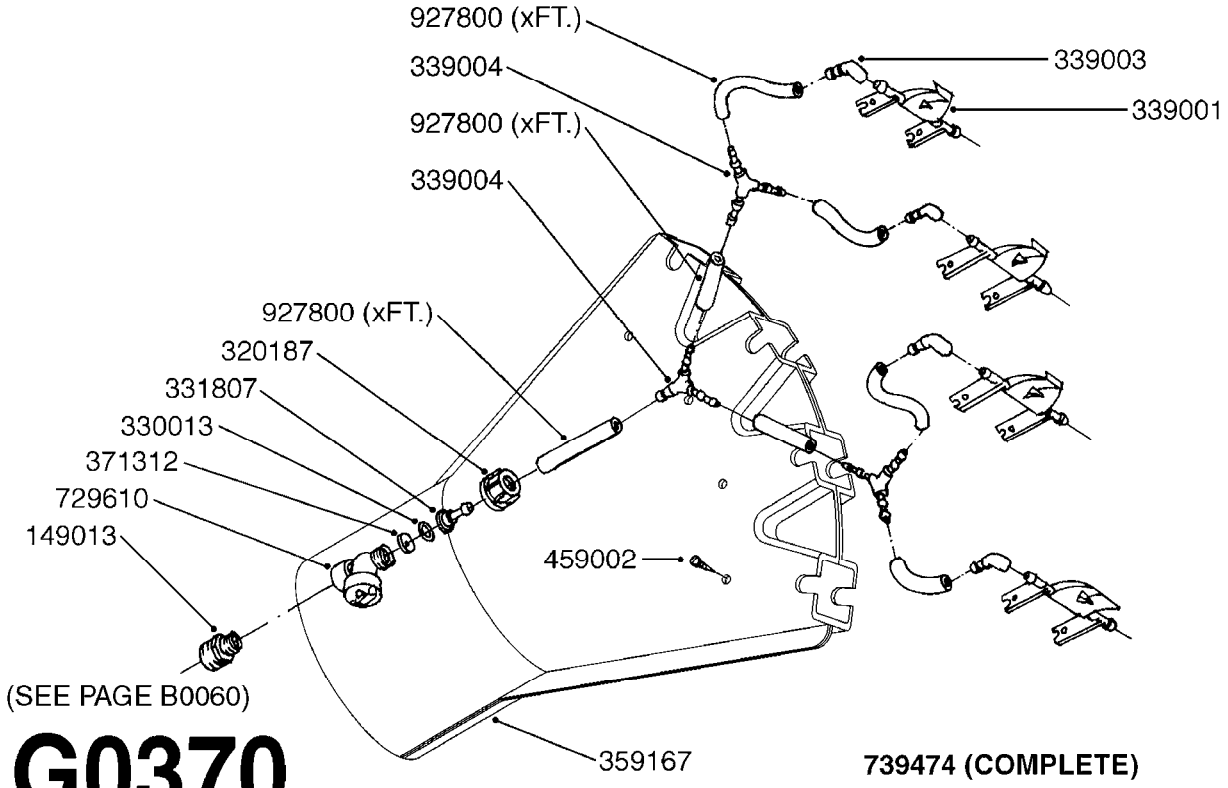
927800 (xFT.)
339003
339004
339001
927800 (xFT.)
339004
927800 (xFT.)
320187
331807
330013
371312
729610
149013
459002
(SEE PAGE B0060)
359167
739474 (COMPLETE)

G0370

Agroparts: www.HARDI-INTERNATIONAL.com

LP - PNEUMATIC OUTLETS
G0370-HIN, 01:01:16

Date 12.08.2020 11:41

parts-n°	order qty	description
149013	1	REDUCER 1/2" X 3/8"
320187	1	FITT.DK CAP 3/8" BSP BLACK
330013	1	O-RING 2.5 X 10 PUR
331807	1	FITT.DK HB 5/16" F.3/8" NUT
339001	1	DIFFUSOR PLATE L=59 BLADE
339003	1	ELBOW F.DIFFUSOR PLATE
339004	1	FITT.DK Y-5/16"
339045	1	VENTURI DEFLECTOR L=100 DOUBLE F.LP
359164	1	PNEUMATIC AIR SPOUT 1 OUTLET
359167	1	PNEUMATIC SPOUT, 4 OUTLETS
371312	1	NOZZLE CERAMIC 1099-15
459002	1	SCREW N10X1/2"
729610	1	NOZZLE ASSY. NON DRIP 3/8 THRD
739471	1	NOZZLE OUTLET SINGLE TWO-ROW
739474	1	SPOUT ASSY. F. LP 4 OUTLET
927800	1	HOSE BLACK D8X12

PNEUMATIC AIR SPOUTS 2 OUTLETS
G0380-HIN, 01:01:16

Date 12.08.2020 11:41

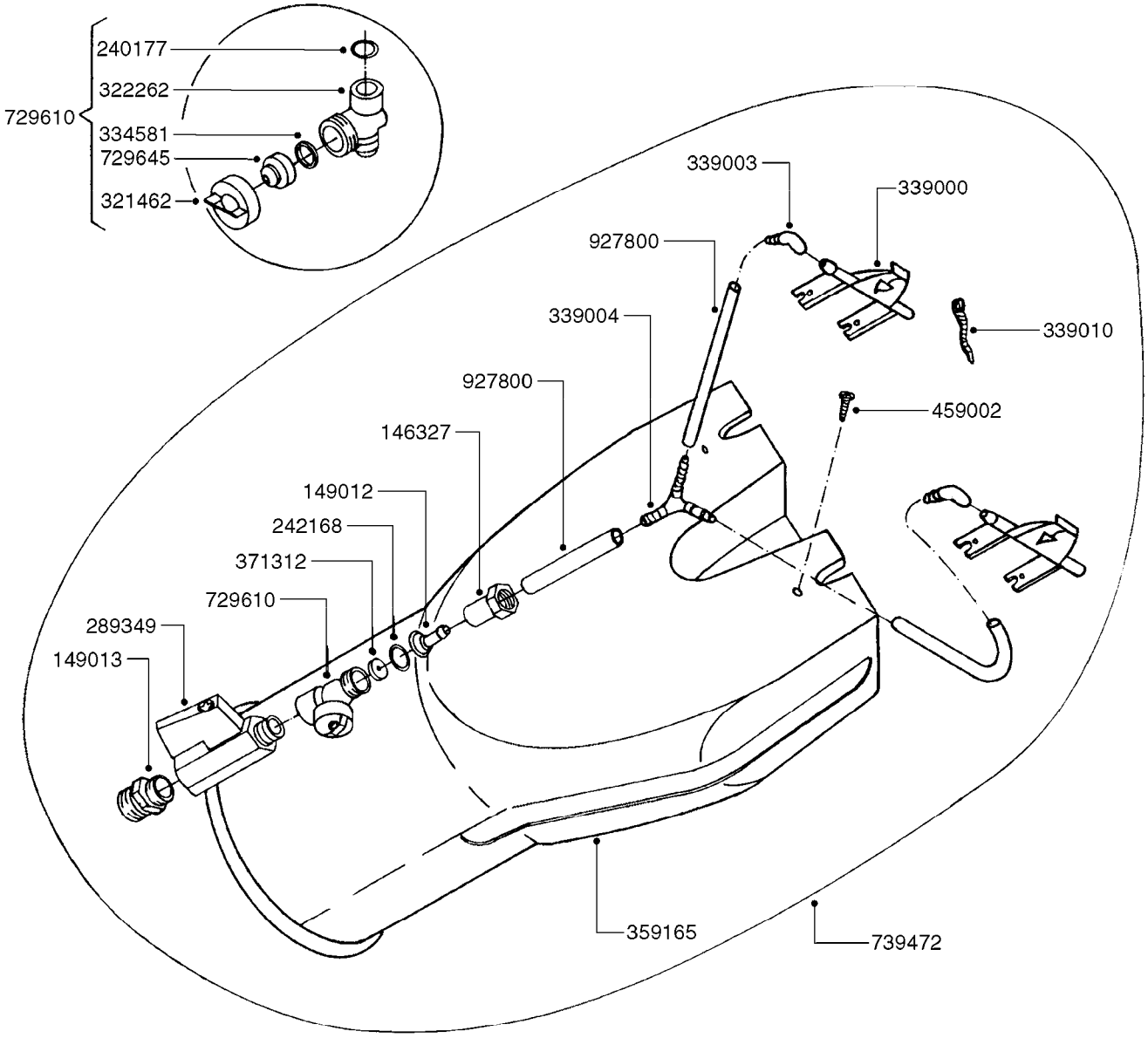

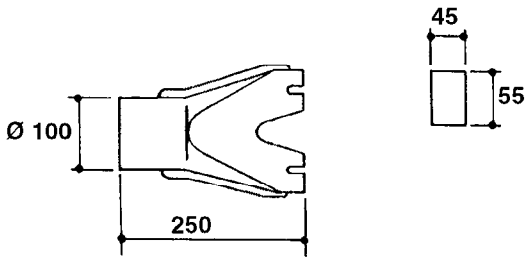

G0380

Agroparts: www.HARDI-INTERNATIONAL.com

PNEUMATIC AIR SPOUTS 2 OUTLETS
G0380-HIN, 01:01:16

Date 12.08.2020 11:41

parts-n°	order qty	description
146327	1	UNION NUT 3/8' BRASS
149012	1	3/8" HOSE TAIL D.8 T-12
149013	1	REDUCER 1/2" X 3/8"
240177	1	O-RING D16.1/11.3 X 2.4
242168	1	O-RING D11.2X1.9
289349	1	BALL VALVE 3/8" M-H
321462	1	CAP F.NO-DRIP ASSY.
322262	1	HOUSING F. NON DRIP DIAPHRAGM
334581	1	DIAPHRAGM, NO-DRIP alt 241371
339000	1	SWIRL PLATE L=80 PNEU.K31002
339003	1	ELBOW F.DIFFUSOR PLATE
339004	1	FITT.DK Y-5/16"
339010	1	TIE STRAP SMALL 2.5MM X 100MM
359165	1	PNEUMATIC AIRSPOUT 2 OUTLETS
371312	1	NOZZLE CERAMIC 1099-15
459002	1	SCREW N10X1/2"
729610	1	NOZZLE ASSY. NON DRIP 3/8 THRD
729645	1	NON-DRIP SPRING ASSY.GREEN 10
739472	1	SPOUT ASSY F. LP 2 OUTLET
927800	1	HOSE BLACK D8X12

PNEUMATIC AIR SPOUTS 4 OUTLETS
G0390-HIN, 01:01:16

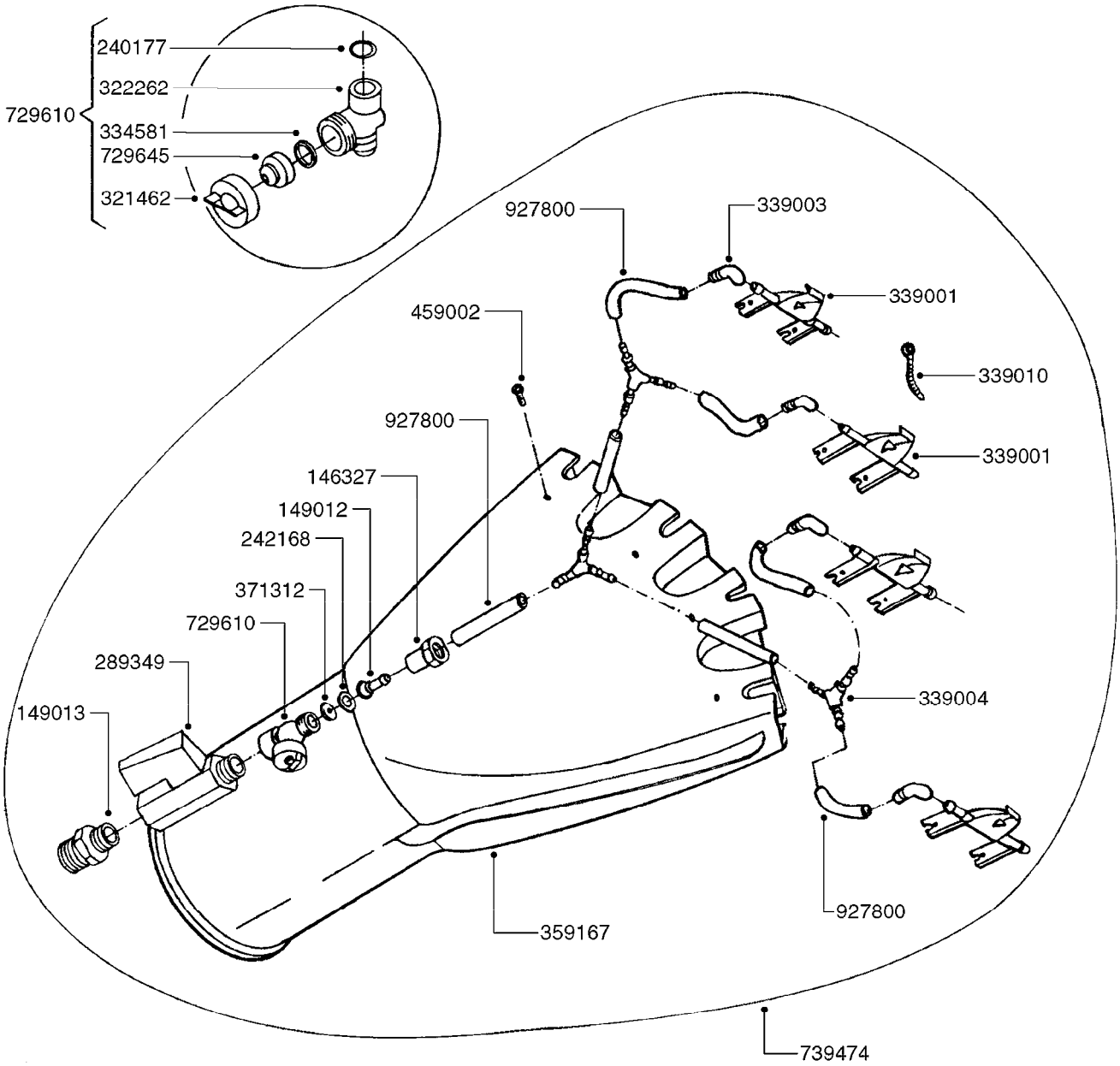

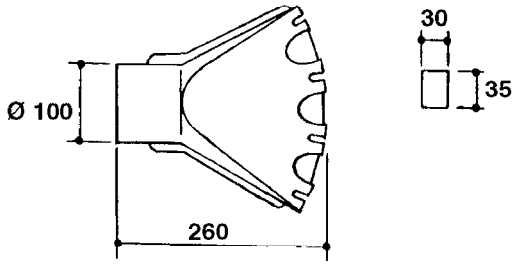

G0390

Agroparts: www.HARDI-INTERNATIONAL.com

PNEUMATIC AIR SPOUTS 4 OUTLETS
G0390-HIN, 01:01:16

Date 12.08.2020 11:41

parts-n°	order qty	description
146327	1	UNION NUT 3/8' BRASS
149012	1	3/8" HOSE TAIL D.8 T-12
149013	1	REDUCER 1/2" X 3/8"
240177	1	O-RING D16.1/11.3 X 2.4
242168	1	O-RING D11.2X1.9
289349	1	BALL VALVE 3/8" M-H
321462	1	CAP F.NO-DRIP ASSY.
322262	1	HOUSING F. NON DRIP DIAPHRAGM
334581	1	DIAPHRAGM, NO-DRIP alt 241371
339001	1	DIFFUSOR PLATE L=59 BLADE
339003	1	ELBOW F.DIFFUSOR PLATE
339004	1	FITT.DK Y-5/16"
339010	1	TIE STRAP SMALL 2.5MM X 100MM
359167	1	PNEUMATIC SPOUT, 4 OUTLETS
371312	1	NOZZLE CERAMIC 1099-15
459002	1	SCREW N10X1/2"
729610	1	NOZZLE ASSY. NON DRIP 3/8 THRD
729645	1	NON-DRIP SPRING ASSY.GREEN 10
739474	1	SPOUT ASSY. F. LP 4 OUTLET
927800	1	HOSE BLACK D8X12

HYDROPNEUM. SPOUTS 3 OUTLETS
G0400-HIN, 01:01:16

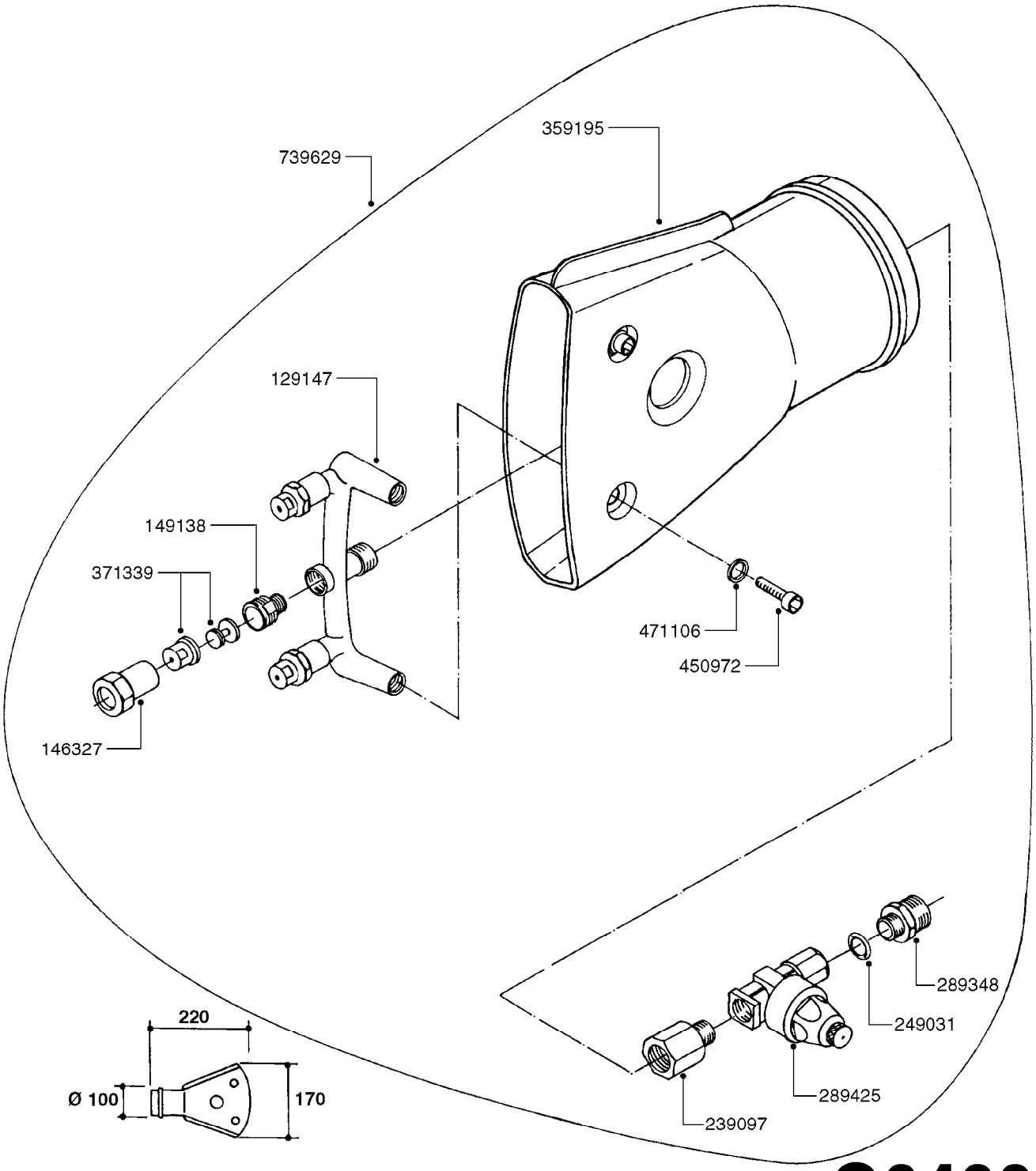

G0400

Agroparts: www.HARDI-INTERNATIONAL.com

HYDROPNEUM. SPOUTS 3 OUTLETS
G0400-HIN, 01:01:16

Date 12.08.2020 11:41

parts-n°	order qty	description
129147	1	HYDROPNEUMATIC MANIFOLD 3 OUT.
146327	1	UNION NUT 3/8' BRASS
149138	1	ADAPTER FOR NOZZLE H
239097	1	HYDROPNEUMATIC MANIFOLD ADAPT.
249031	1	O-RING
289348	1	ADAPTER 1/2" - 1/4"
289425	1	NON-DRIP H1/4" ON/OFF
359195	1	FISHTAIL SPOUT - 3 OUTLETS
371339	1	NOZZLE ALBUZ BROWN WITH SWIRL
450972	1	SCREW M6X15 ALLEN GALV.
471106	1	WASHER D6
739629	1	WHITE SPOUT D.100 CPL W/3 NOZZ

HYDROPNEUM. SPOUTS 5 OUTLETS
G0410-HIN, 01:01:16

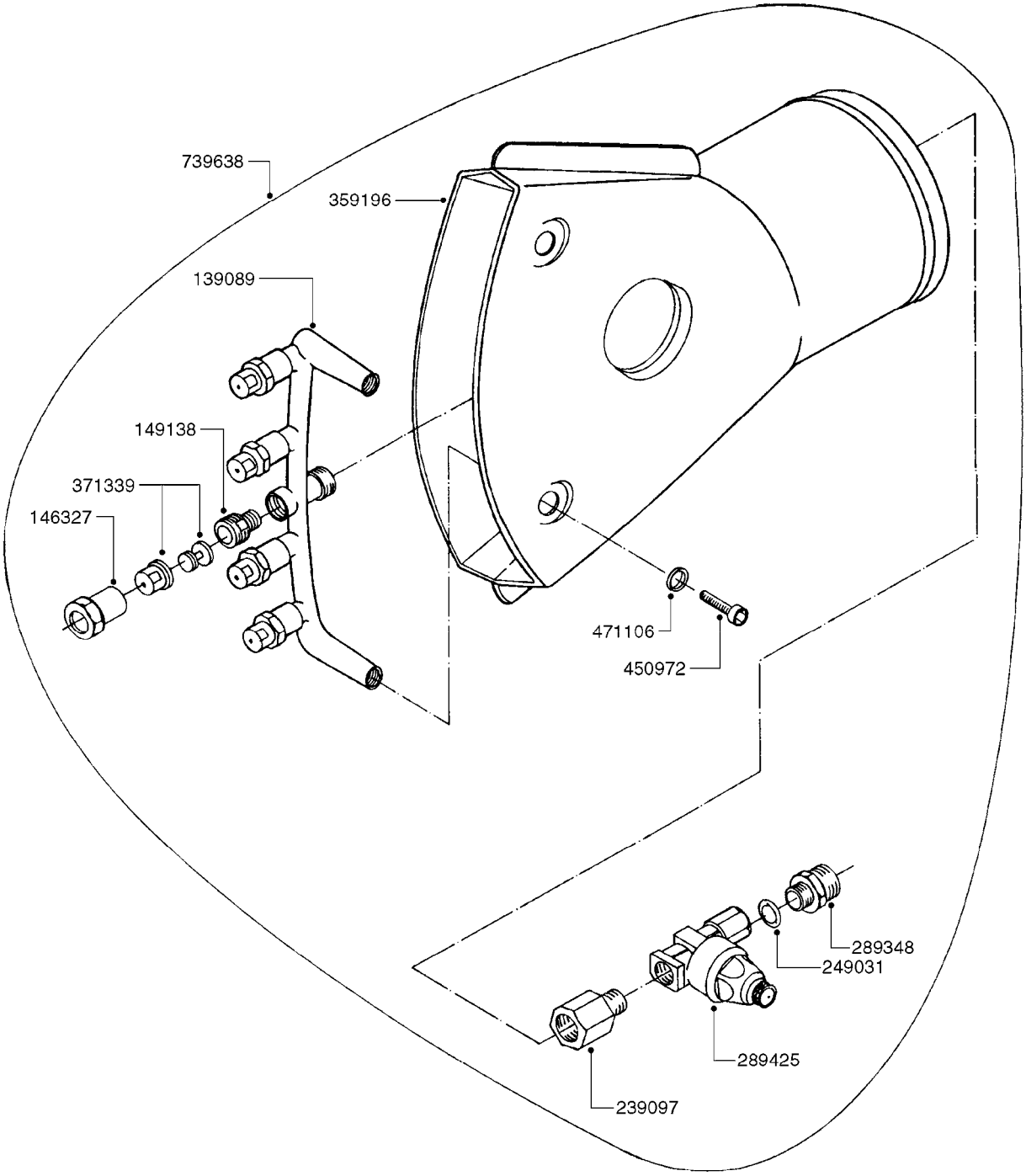

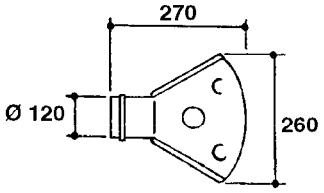

G0410

Agroparts: www.HARDI-INTERNATIONAL.com

HYDROPNEUM. SPOUTS 5 OUTLETS
G0410-HIN, 01:01:16

Date 12.08.2020 11:41

parts-n°	order qty	description
139089	1	NOZZLE HOLDER F/5 NOZZLES
146327	1	UNION NUT 3/8' BRASS
149138	1	ADAPTER FOR NOZZLE H
239097	1	HYDROPNEUMATIC MANIFOLD ADAPT.
249031	1	O-RING
289348	1	ADAPTER 1/2" - 1/4"
289425	1	NON-DRIP H1/4" ON/OFF
359196	1	FISHTAIL SPOUT 5 NOZZLE 120Ø
371339	1	NOZZLE ALBUZ BROWN WITH SWIRL
450972	1	SCREW M6X15 ALLEN GALV.
471106	1	WASHER D6
739638	1	NOZZLE OUTLET 5 NOZZ. D125 SPV

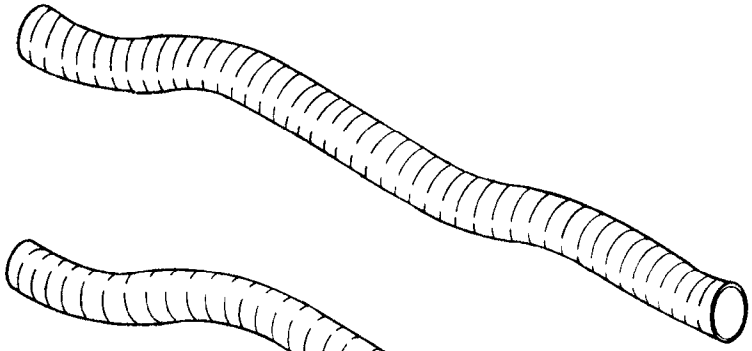

24002503 - Ø 5" (125mm)

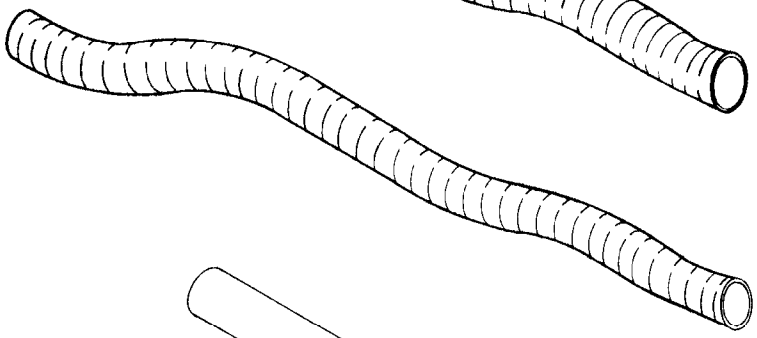

24002403 - Ø 4" (100mm)

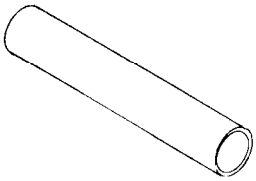

259034 - Ø 5" (125mm) L=29-1/2" (750mm) PVC

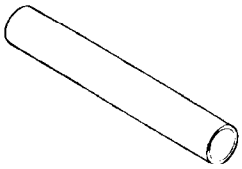

259035 - Ø 4-3/8" (110mm) L=39-3/8" (1000mm) PVC

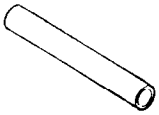

349012 - Ø 4" (100mm) L=37-3/8" (950mm) PVC

349026 - Ø 5-1/2" (140mm) / Ø 4-3/8" (110mm) PVC

349030 - Ø 5-1/2" (140mm) / Ø 3-1/2" (90mm) PVC

349025 - Ø 5" (125mm) / Ø 4-3/8" (110mm) PVC

349023 - Ø 5" (125mm) PVC

G0420

Agroparts: www.HARDI-INTERNATIONAL.com

TUBES & HOSES
G0420-HIN, 01:01:16

Date 12.08.2020 11:41

parts-n°	order qty	description
259034	1	PVC HOSE D125MM X 0.75M
259035	1	PVC HOSE D100MM X 1.0M
349012	1	PVC TUBE D100MM X 950MM
349023	1	GREY PVC LID D125MM
349025	1	CONNECT.PIECE PVC D125MM-110MM
349026	1	CONICAL REDUC.PVC D140MM-100MM
349030	1	140MM-90MM PVC ADAPTER
24002403	1	HOSE R X TPR 4" BLACK
24002503	1	HOSE R X TPR 5" BLACK

ZENIT - GEARBOX F.AXIAL FAN
G0430-HIN, 01:01:16

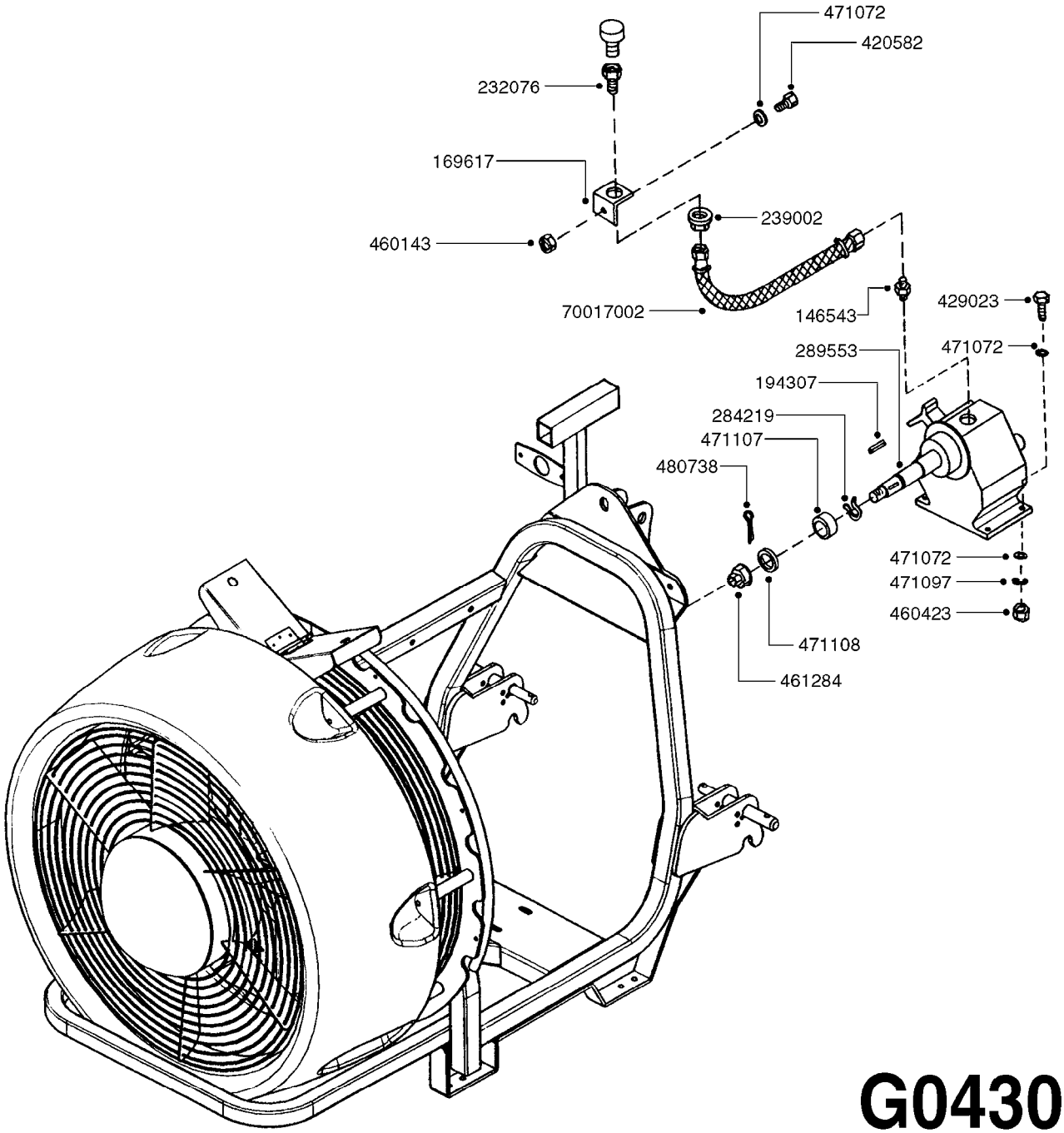

G0430

Agroparts: www.HARDI-INTERNATIONAL.com

ZENIT - GEARBOX F.AXIAL FAN
G0430-HIN, 01:01:16

Date 12.08.2020 11:41

parts-n°	order qty	description
146543	1	HEXAGON NIPPLE 1/2"
169617	1	BRACKET F.OIL TUBE 40X90X3 ZE
194307	1	KEY 10 X 8 X 40
232076	1	NIPPLE 1/2"M-W ESP.CIRC.BRA
239002	1	NUT 1/2" BSP BRASS F.BULKHEAD
284219	1	SNAP-RING OUTER 40X1.75
289553	1	GEAR BOX 2-SPEED SHAFT D40
420582	1	BOLT HEX 8.8 DEL M8X20 FT A2
429023	1	BOLT HEX 12.9 M10X40 DIN-933
460143	1	LOCK NUT M8 SST A2 DIN985
460423	1	NUT HEX M10X1.50 LOCK DIN985A2 SS
461284	1	NUT HEX M24X2 SLOTTED
471072	1	WASHER M10 EL2
471097	1	WASHER D10 SAFETY
471107	1	WASHER D50,6D40,1X5
471108	1	WASHER D44D25X4.5
480738	1	PIN D5X40 SPLIT
70017002	1	HOSE F.REMOTE GREASE PORT

ZENIT - 32" AXIAL FAN
G0440-HIN, 01:01:16

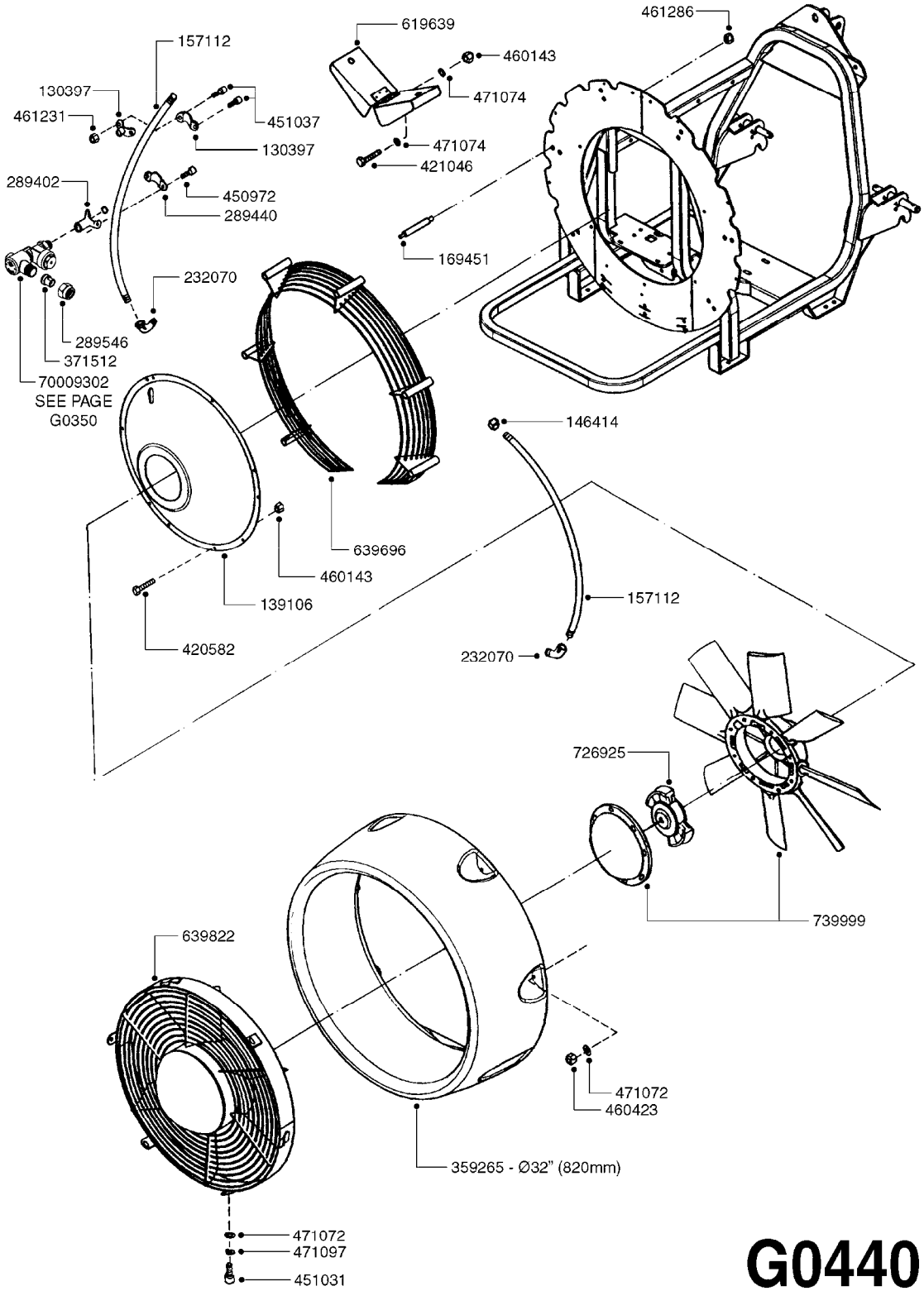

G0440

Agroparts: www.HARDI-INTERNATIONAL.com

ZENIT - 32" AXIAL FAN
G0440-HIN, 01:01:16

Date 12.08.2020 11:41

parts-n°	order qty	description
130397	1	NOZZLE HOLDER UPPER PART
139106	1	BUSHING TURBINE P540
146414	1	TERMINATION STOPPER 22 X 100
157112	1	BLOWER SPRAY LINE ZENIT 32"
169451	1	SHAFT M14 DIST.FAN HOUSING ZE
232070	1	ELBOW 1/2" BRASS M-22.100 H
289402	1	CLAMP STRAIGHT F/NOZZLE HOLDER
289440	1	CLAMP F. 1/4" NOZZLE HOLDERS
289546	1	NUT F.NOZZLE HOLDER ZENIT
359265	1	FAN HOUSING POLY. 32" ZENIT
371512	1	NOZZLE CONE JET 1299-16 RED
420582	1	BOLT HEX 8.8 DEL M8X20 FT A2
421046	1	BOLT HEX M8X25/25 A2 SS DIN933
450972	1	SCREW M6X15 ALLEN GALV.
451031	1	SCREW M10X25 HEX
451037	1	SCREW M6X20 HEX
460143	1	LOCK NUT M8 SST A2 DIN985
460423	1	NUT HEX M10X1.50 LOCK DIN985A2 SS
461231	1	NUT HEX M6 BRASS
461286	1	NUT M14 SAFETY
471072	1	WASHER M10 EL2
471074	1	WASHER M8 ELZ
471097	1	WASHER D10 SAFETY
619639	1	WING FOR V-DEFL.130 MM ZE/ZB
639696	1	SAFETY GRILL 32" FAN 130MM ZE
639822	1	SAFETY GRILL W/9 AIR VANES 32"
726925	1	CENTRIFUGAL CLUTCH D. 245
739999	1	BLOWER WHEEL D.820
70009302	1	SINGLE NOZZLE HOLDER ZENIT

ZENIT BLOWER
G0450-HIN, 01:01:16

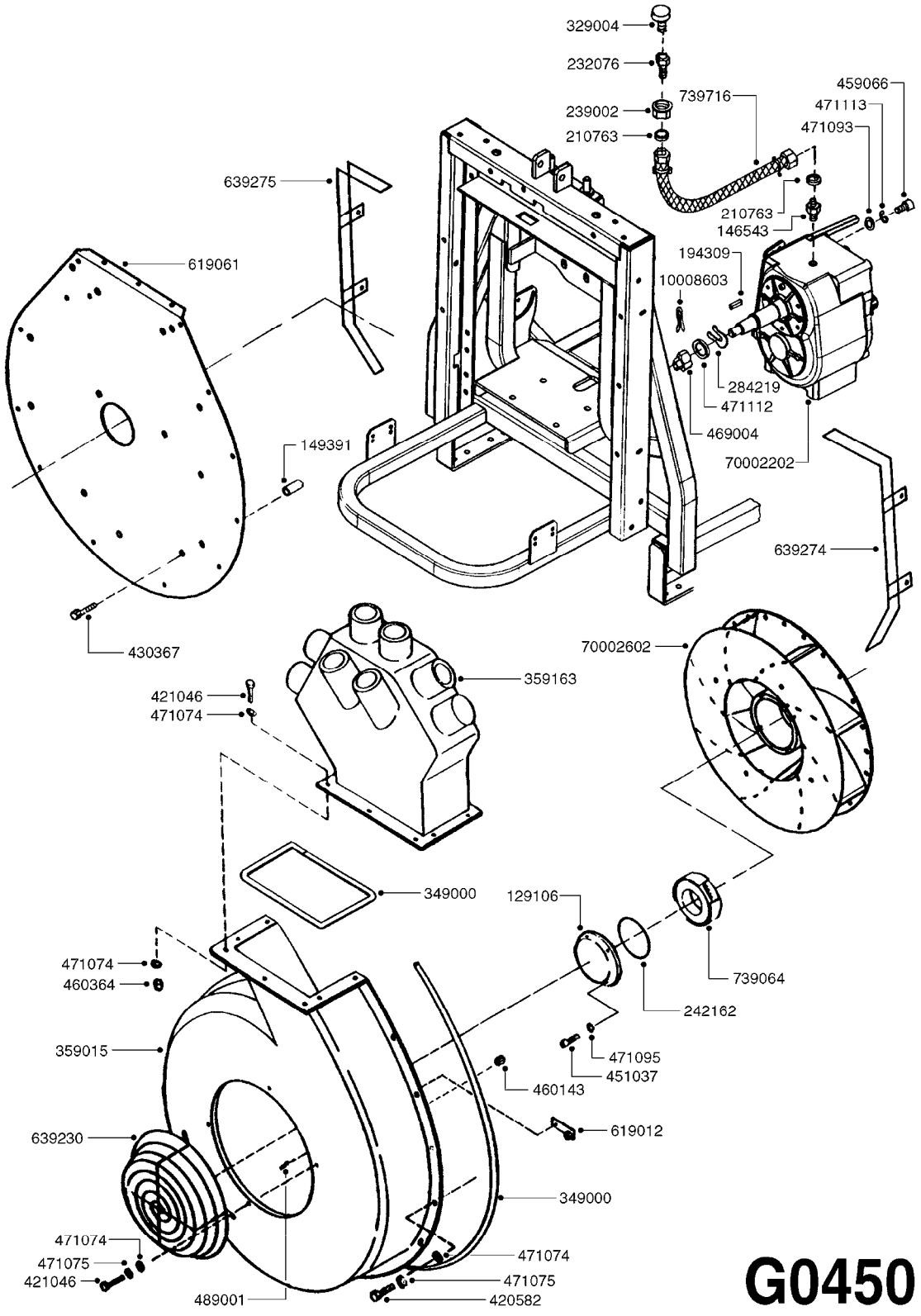

G0450

Agroparts: www.HARDI-INTERNATIONAL.com

ZENIT BLOWER
G0450-HIN, 01:01:16

Date 12.08.2020 11:41

parts-n°	order qty	description
129106	1	HUB CAP F. 540 FAN LP
146543	1	HEXAGON NIPPLE 1/2"
149391	1	SPACER BUSHING P540
194309	1	KEY 8 X 7 X 40
210763	1	SEAL OIL 18X24X105
232076	1	NIPPLE 1/2"M-W ESP.CIRC.BRA
239002	1	NUT 1/2" BSP BRASS F.BULKHEAD
242162	1	O-RING D140.5X134.5 X 3
284219	1	SNAP-RING OUTER 40X1.75
329004	1	PLUG F.OIL HOLE GEARBOX F.SPV
349000	1	SEAL FOR CANNON
359015	1	BLOWER HOUSING LP/TP
359163	1	AIR DIST. HOUSING
420582	1	BOLT HEX 8.8 DEL M8X20 FT A2
421046	1	BOLT HEX M8X25/25 A2 SS DIN933
430367	1	BOLT HEX 8.8 DEL M12X100 DIN931
451037	1	SCREW M6X20 HEX
459066	1	BOLT HEX 12.9 M14X40 DIN-912
460143	1	LOCK NUT M8 SST A2 DIN985
460364	1	NUT HU M8 A2 SS DIN934
469004	1	M-20 SPECIAL NUT
471074	1	WASHER M8 ELZ
471075	1	WASHER M8 LOCK
471093	1	WASHER D14 GALV. (168873)
471095	1	WASHER D6,4
471112	1	WASHER D20
471113	1	WASHER D14 TENSION
489001	1	RIVET 4X20 AL.
619012	1	STEEL PLATE W/NUT M-8 TURBO
619061	1	PLATE BASE ZATURN
639230	1	AIR GRID PROTECTOR P540
639274	1	SAFETY GRILL RIGHT
639275	1	SAFETY GRILL LEFT
739064	1	CENTRIFUGAL CLUTCH F.LP D130
739716	1	HOSE F.REMOTE GREASE PORT
10008603	1	COTTER PIN 1/8"X 1-1/2"
70002202	1	GEAR BOX TURBINE 20-30
70002602	1	P540 TURBINE ASSEMBLY

ZENIT BLOWER FAN
G0460-HIN, 01:01:16

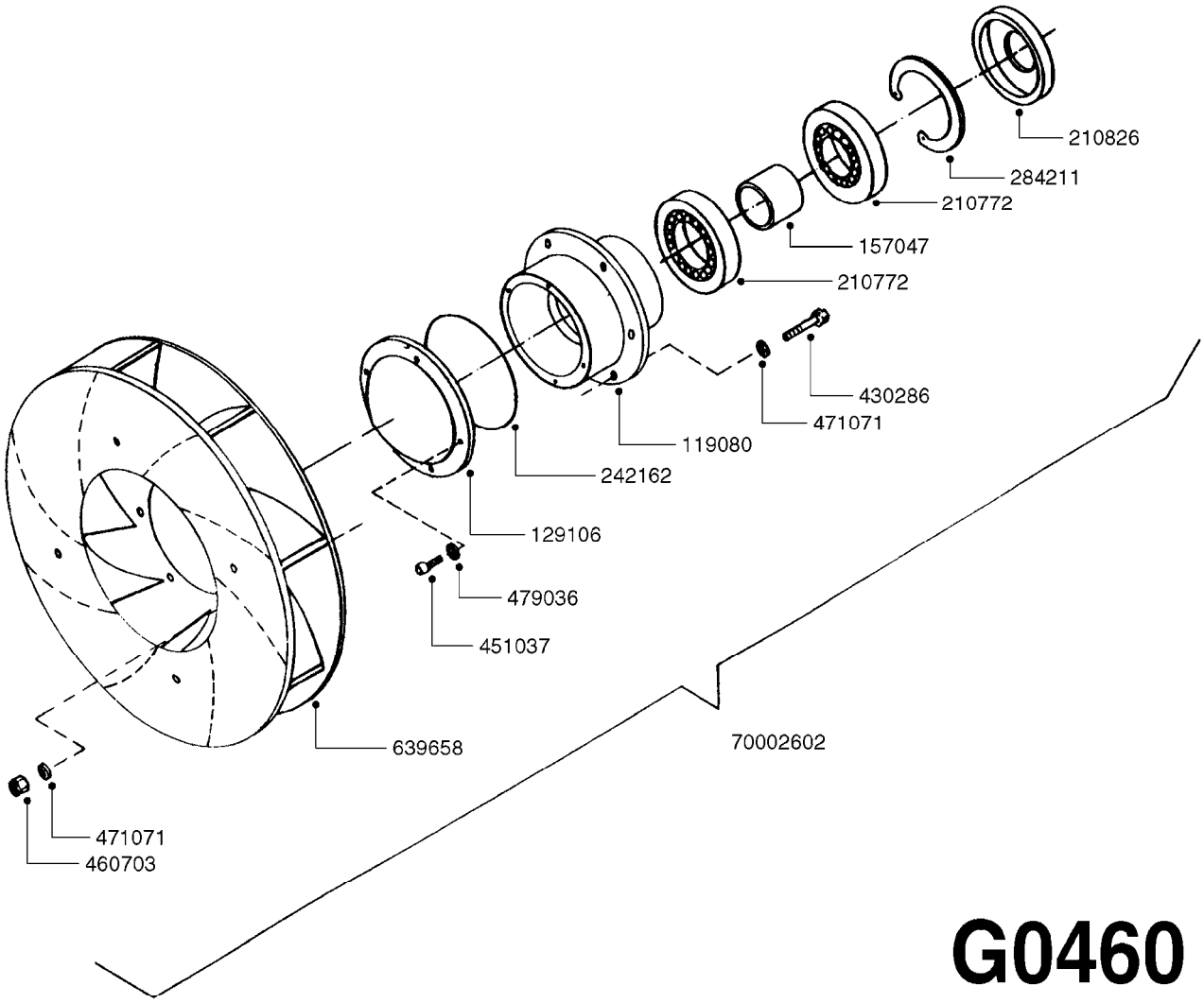

G0460

Agroparts: www.HARDI-INTERNATIONAL.com

ZENIT BLOWER FAN
G0460-HIN, 01:01:16

Date 12.08.2020 11:41

parts-n°	order qty	description
119080	1	BUSHING TURBINE P540
129106	1	HUB CAP F. 540 FAN LP
157047	1	SPACER RING BEARING
210772	1	BALL BEARING 6208 2RS1
210826	1	SEAL OIL 45 X 10
242162	1	O-RING D140.5X134.5 X 3
284211	1	SNAP-RING INNER 80X2.5
430286	1	BOLT HEX 8.8 DEL M12X30 FT
451037	1	SCREW M6X20 HEX
460703	1	NUT HEX M12X1.75 LOCK DIN985A2 SS
471071	1	WASHER M12 GALV
479036	1	WASHER NL D6 NORD-LOCK M6
639658	1	STEEL FAN P540-PLAIN
70002602	1	P540 TURBINE ASSEMBLY

ZENIT GEAR BOX
G0470-HIN, 01:01:16

Date 12.08.2020 11:41

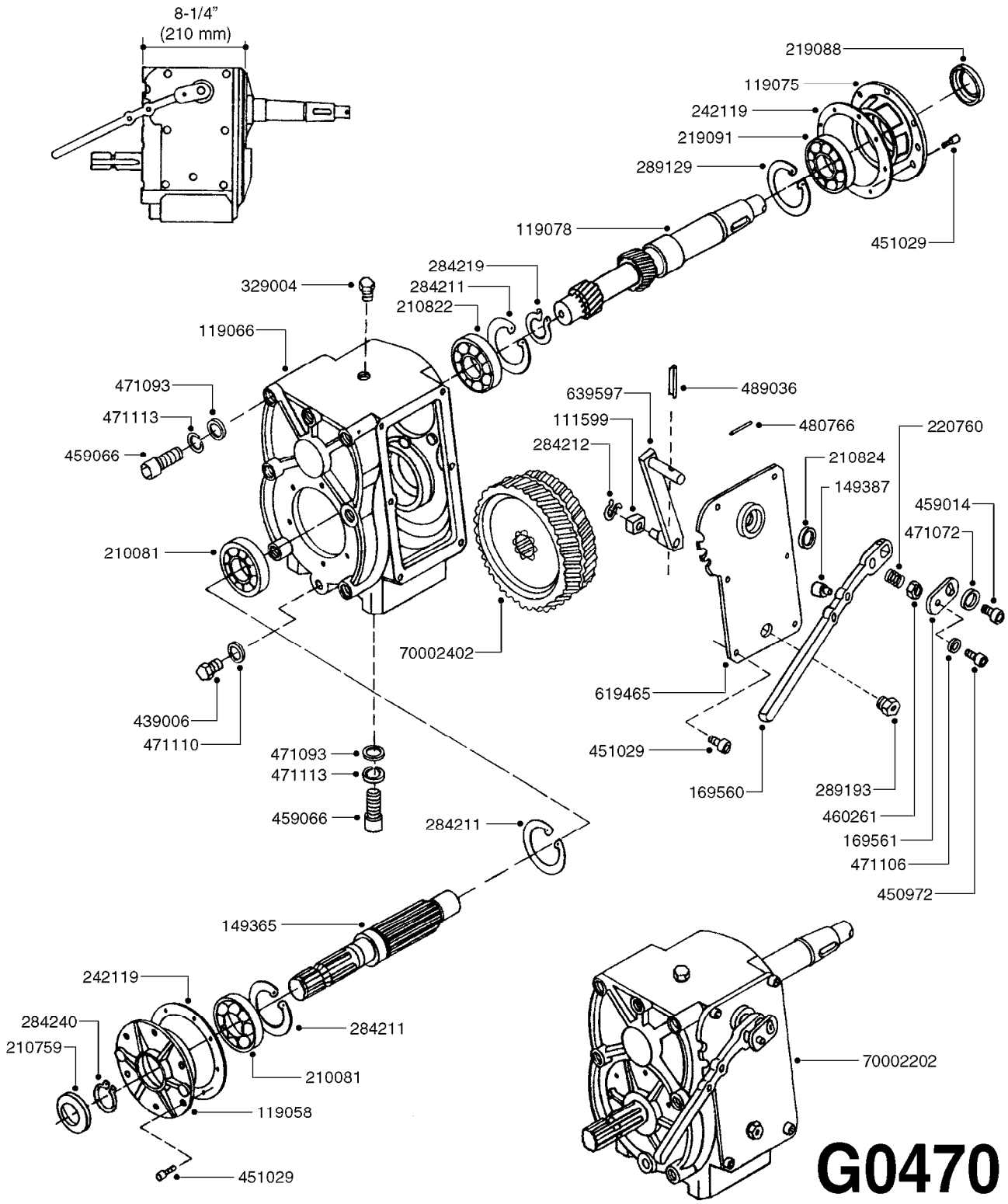

Agroparts: www.HARDI-INTERNATIONAL.com

ZENIT GEAR BOX
G0470-HIN, 01:01:16

Date 12.08.2020 11:41

parts-n°	order qty	description
111599	1	HEAD FOR CHANGE OF GEAR
119058	1	COVER GEARBOX 2002(6307-NJ307)
119066	1	GEARBOX CASE
119075	1	COVER FOR GEARBOX VR2002
119078	1	SHAFT F/GEARBOX
149365	1	SHAFT OUTPUT F.GEARBOX
149387	1	BUSHING F.HANDLE GEARBOX 2002
169560	1	CHAPA 287x66x12 MANETA CAMBIO MULTIP.
169561	1	STOP F.HANDLE SPRING GRBX 2002
210081	1	BEARING BALL 6307
210759	1	SEAL OIL 55X35X40
210822	1	BALL BEARING NJ 307
210824	1	SEAL OIL 18 X 7
219088	1	SEAL 40X60X8
219091	1	BALL BEARING BL208
220760	1	SPRING
242119	1	GASKET FOR COVER
284211	1	SNAP-RING INNER 80X2.5
284212	1	SNAP-RING OUTER 10X1
284219	1	SNAP-RING OUTER 40X1.75
284240	1	SNAP-RING OUTER 35X1.5
289129	1	SNAP RING I-85
289193	1	OIL LEVEL GLASS
329004	1	PLUG F.OIL HOLE GEARBOX F.SPV
439006	1	PLUG F.OIL HOLE GEARBOX F.LE
450972	1	SCREW M6X15 ALLEN GALV.
451029	1	SCREW M8X20 HEX
459014	1	ALLEN SCREW M8 X 15 GALV.DIN93
459066	1	BOLT HEX 12.9 M14X40 DIN-912
460261	1	NUT HEX M6X1.00 LOCK DIN985 A2 SS
471072	1	WASHER M10 EL2
471093	1	WASHER D14 GALV. (168873)
471106	1	WASHER D6
471110	1	WASHER D18D12X2 COPPER
471113	1	WASHER D14 TENSION
480766	1	ROLL PIN D4 X 50 STAINLESS
489036	1	ROLL PIN D6 X 40
619465	1	COVER ADJ.F.GEAR BOX 20-30
639597	1	ARM FOR GEAR CHANGE
70002202	1	GEAR BOX TURBINE 20-30
70002402	1	CROWN TOOTHWHEEL F/GEARBOX

ZENIT - 32" AXIAL FAN
G0480-HIN, 01:01:16

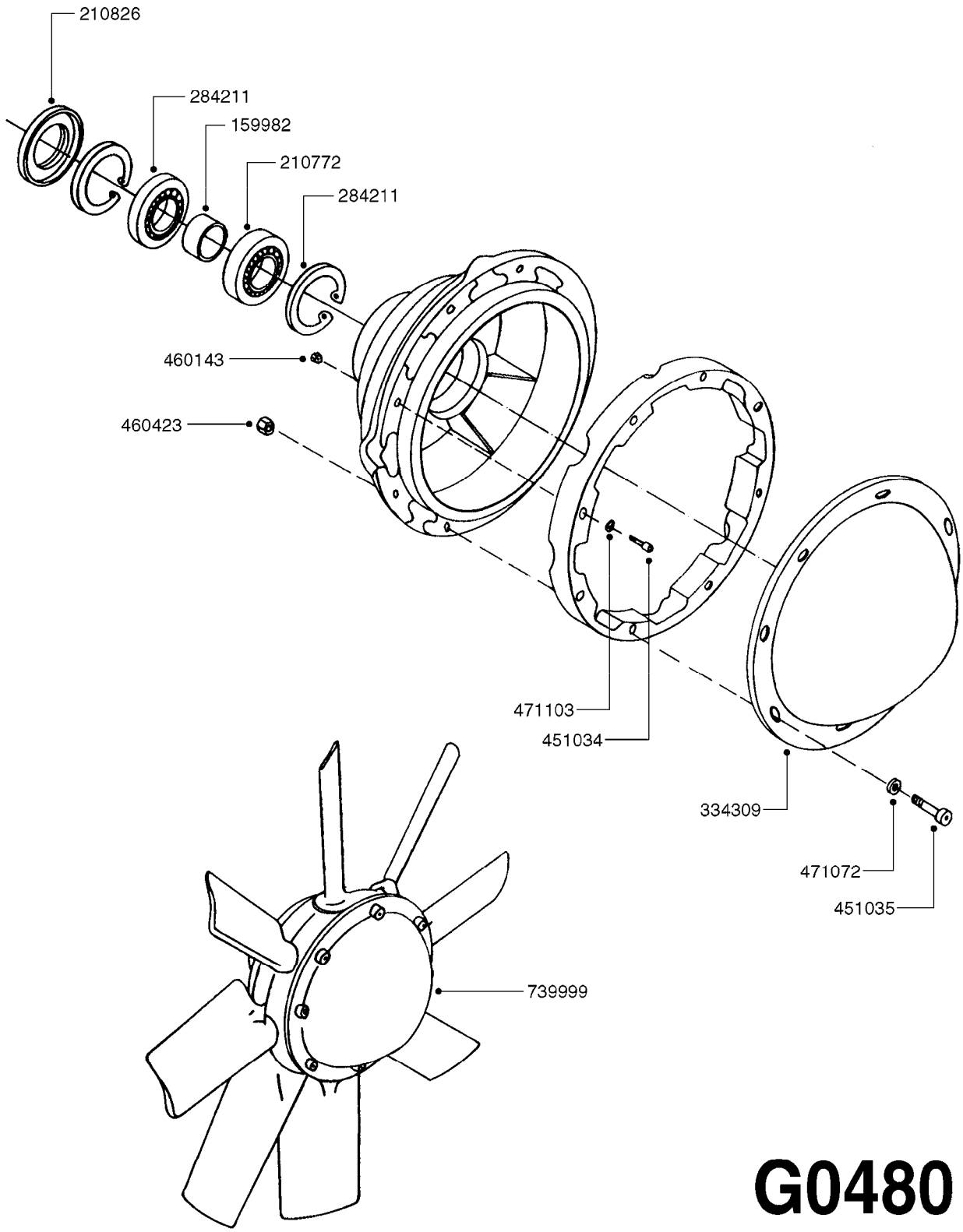

G0480

Agroparts: www.HARDI-INTERNATIONAL.com

ZENIT - 32" AXIAL FAN
G0480-HIN, 01:01:16

Date 12.08.2020 11:41

parts-n°	order qty	description
159982	1	DISTANCE TUBE FOR 820
210772	1	BALL BEARING 6208 2RS1
210826	1	SEAL OIL 45 X 10
284211	1	SNAP-RING INNER 80X2.5
334309	1	SHIELD
451034	1	SCREW M8X50 HEX
451035	1	SCREW M10X70 HEX
460143	1	LOCK NUT M8 SST A2 DIN985
460423	1	NUT HEX M10X1.50 LOCK DIN985A2 SS
471072	1	WASHER M10 EL2
471103	1	WASHER D8 BRASS
739999	1	BLOWER WHEEL D.820

Section I

Estate Sprayers

main group	page-n°	date	description
Estate Sprayers			
	I0010-HIN	01:01:16	ATV 50/80 FRAME
	I0020-HIN	01:01:16	ATV 50/80 TANK
	I0030-HIN	01:01:16	ATV 150 TANK
	I0040-HIN	01:01:16	ATV 150 SUCTION FITTINGS
	I0050-HIN	01:01:16	ATV 150 FRAME
	I0060-HIN	19:08:19	BNL 50/80 TANK & FRAME
	I0070-HIN	01:01:16	ES 30 TANK & FRAME
	I0080-HIN	15:11:17	ES 50/80 TANK
	I0090-HIN	01:01:16	ES 50 FRAME
	I0100-HIN	01:01:16	RECEIVER HITCH 25 TANK & FRAME
	I0110-HIN	01:01:16	SM 50/80 TANK & FRAME
	I0120-HIN	01:01:16	SM 210 TANK & FRAME

	Agroparts: www.HARDI-INTERNATIONAL.com	
HARDI	ATV 50/80 FRAME I0010-HIN, 01:01:16	Page 0 Date 12.08.2020 11:41

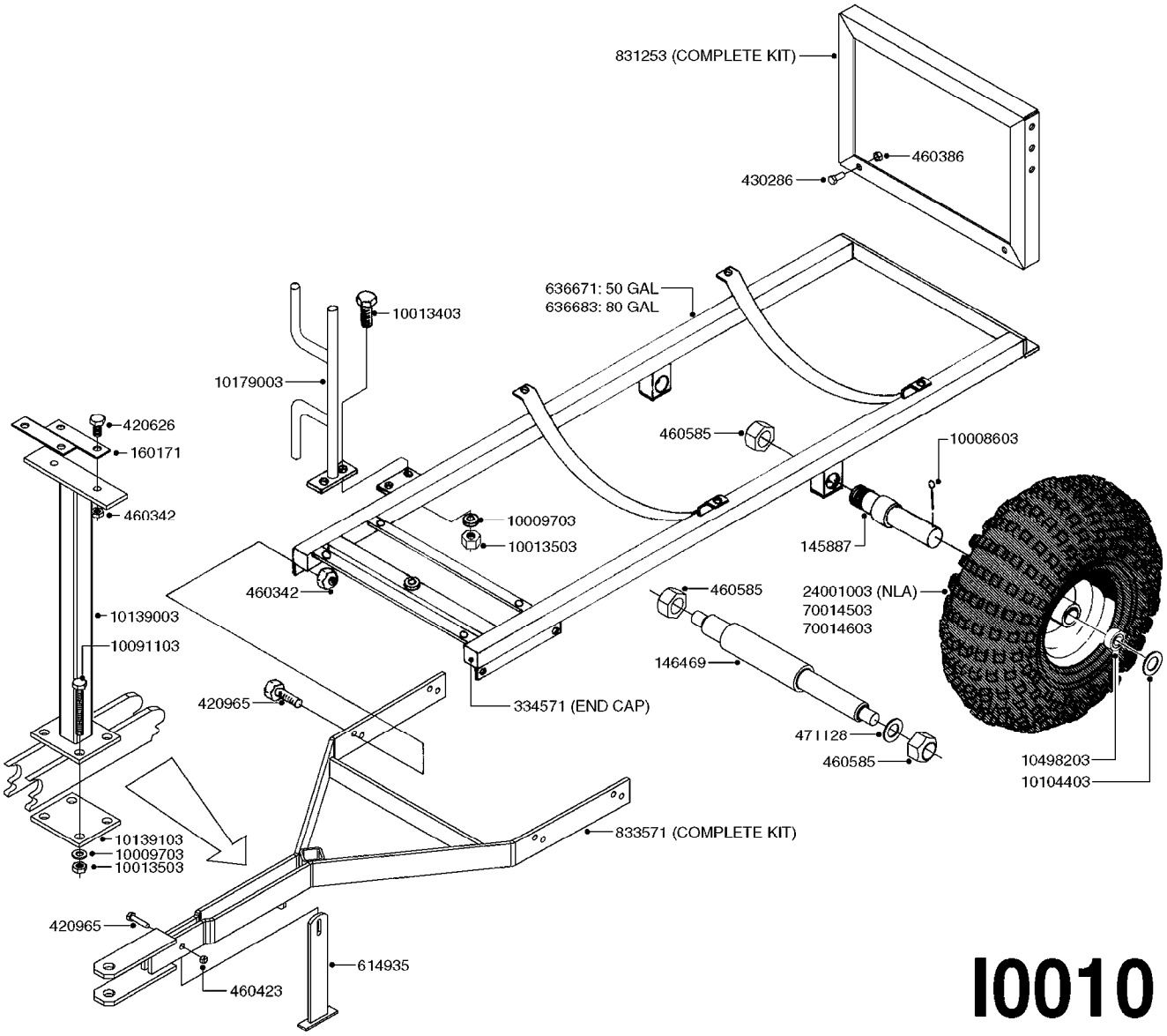

I0010

Agroparts: www.HARDI-INTERNATIONAL.com

ATV 50/80 FRAME
I0010-HIN, 01:01:16

Date 12.08.2020 11:41

parts-n°	order qty	description
145887	1	AXLE SHAFT ES30/53
146469	1	AXLE SHAFT ESTATE TRAILER SPRY
160171	1	MOUNTING PLATE NK
334571	1	PLUG 40x40x2 F.SQ.TUBE
420626	1	BOLT HEX 8.8 DEL M10X20 FT
420965	1	M10X40 MACHINE SCREW STAINLESS
430286	1	BOLT HEX 8.8 DEL M12X30 FT
460342	1	NUT HEX M10 DEL DIN934
460386	1	NUT HEX M12X1.75
460423	1	NUT HEX M10X1.50 LOCK DIN985A2 SS
460585	1	LOCKING NUT M16 DIN985 A2 SS
471128	1	WASHER, M16, Ø30/17.0X 3.0, SS
614935	1	JACK STAND FOR ES30/53
636671	1	FRAME TR/ATV 53
636683	1	FRAME FOR ATV/ES 80
831253	1	REAR BOOM MT.FOR ATV/ES80
833571	1	DRAW BAR FOR ES30/50/80
10008603	1	COTTER PIN 1/8"X 1-1/2"
10009703	1	WASHER LOCK L/W Z 3/8"
10013403	1	BOLT HEX 3/8-16X1 1/4 HCS Z5
10013503	1	NUT HEX NC 3/8"
10091103	1	BOLT HEX 3/8 NC GR.2 03.00'
10104403	1	WASHER PLATE 1'
10139003	1	CONTROL POST/TR25/53/80
10139103	1	PLATE CONTROL POST TR/25/53/80
10179003	1	WRAP HOSE BOTTOM PLATE MOUNT
10498203	1	BEARING PFB-200, F.ATV WHEEL
24001003	1	TIRE 20/10.00 x 8 6 PLY ATV
70014503	1	TIRE & RIM ASY 16X750-8 X 4"HU
70014603	1	TIRE & RIM ASY 20X10-8 X 4"HUB

ATV 50/80 TANK
I0020-HIN, 01:01:16

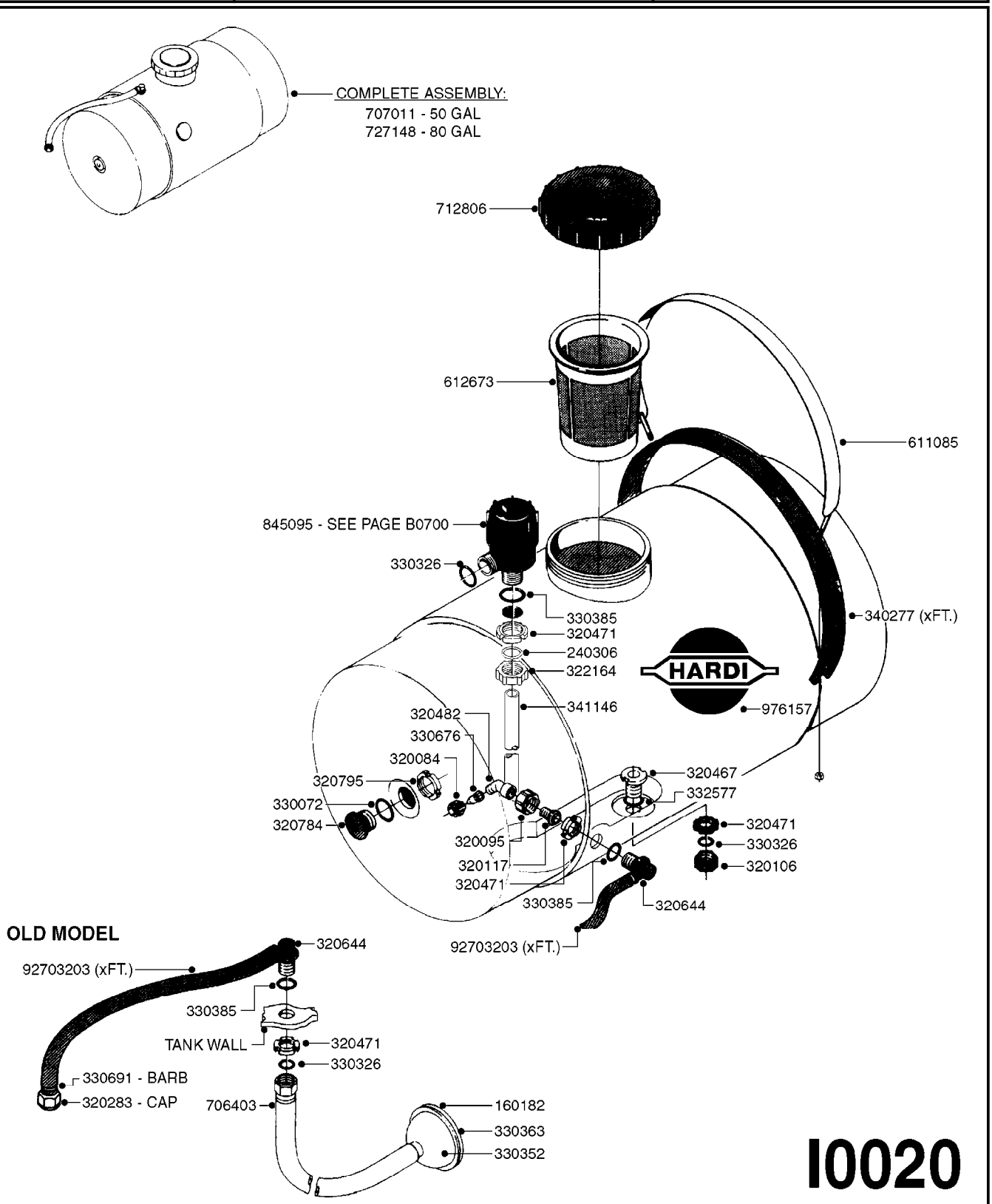

I0020

Agroparts: www.HARDI-INTERNATIONAL.com

ATV 50/80 TANK
I0020-HIN, 01:01:16

Date 12.08.2020 11:41

parts-n°	order qty	description
160182	1	FILTER SCREEN
240306	1	O-RING D29/D21X4
320084	1	FITT.DK NUT 1/2" BSP
320095	1	FITT.DK NUT 1" BSP
320106	1	FITT.DK CAPNUT 1" BSP
320117	1	FITT.DK CONN.1/2"BSP F. 1" CAP
320283	1	FITT.DK NUT 3/4"BSP
320467	1	FITT.DK BULKHEAD 1"BSP SINGLE
320471	1	FITT.DK NUT 1" BSP JAMB
320482	1	FITT.DK ELB. 1/2" BSP 60 DEG.
320644	1	FITT.DK ELB.3/4"HB X 1" BSP
320784	1	FITT.DK CAP 1-1/2" BSP
320795	1	FITT.DK NUT 1-1/2" BSP JAMB
322164	1	FITT.DK CAP 1' SPECIAL
330072	1	O-RING D53.5/D45.5X4
330326	1	O-RING D30/D24X2 F.1"NUT
330352	1	FOAM DROP HOUSING
330363	1	RETAINER FILTER GAUGE
330385	1	O-RING D38,8/32,8XD3
330676	1	FITT.DK HB 3/8" F. 1/2" NUT
330691	1	FITT.DK HB 3/4'F.3/4' NUT
332577	1	O-RING D38/D30X4 F.1" PUR.
340277	1	TANK PACKING - 40mm WIDE x 12"
341146	1	SUCTION TUBE L=640MM/45DEG
611085	1	TANK STRAP FOR NK600
612673	1	FILTER BASKET F. ES30/ES53
706403	1	HOSE ASSY. SUCTION F.ESTATE SP
707011	1	TANK 53 GAL. TR/ATV
712806	1	TANK LID WITH VENT S226 RED
727148	1	TANK 80 GAL.F/FLUSH
845095	1	FILTER COMPLETE
976157	1	DECAL COMPANY (4.4" X 4.6")
92703203	1	HOSE R X3/4" X300PSI WP X0012"

ATV 150 TANK
I0030-HIN, 01:01:16

Date 12.08.2020 11:41

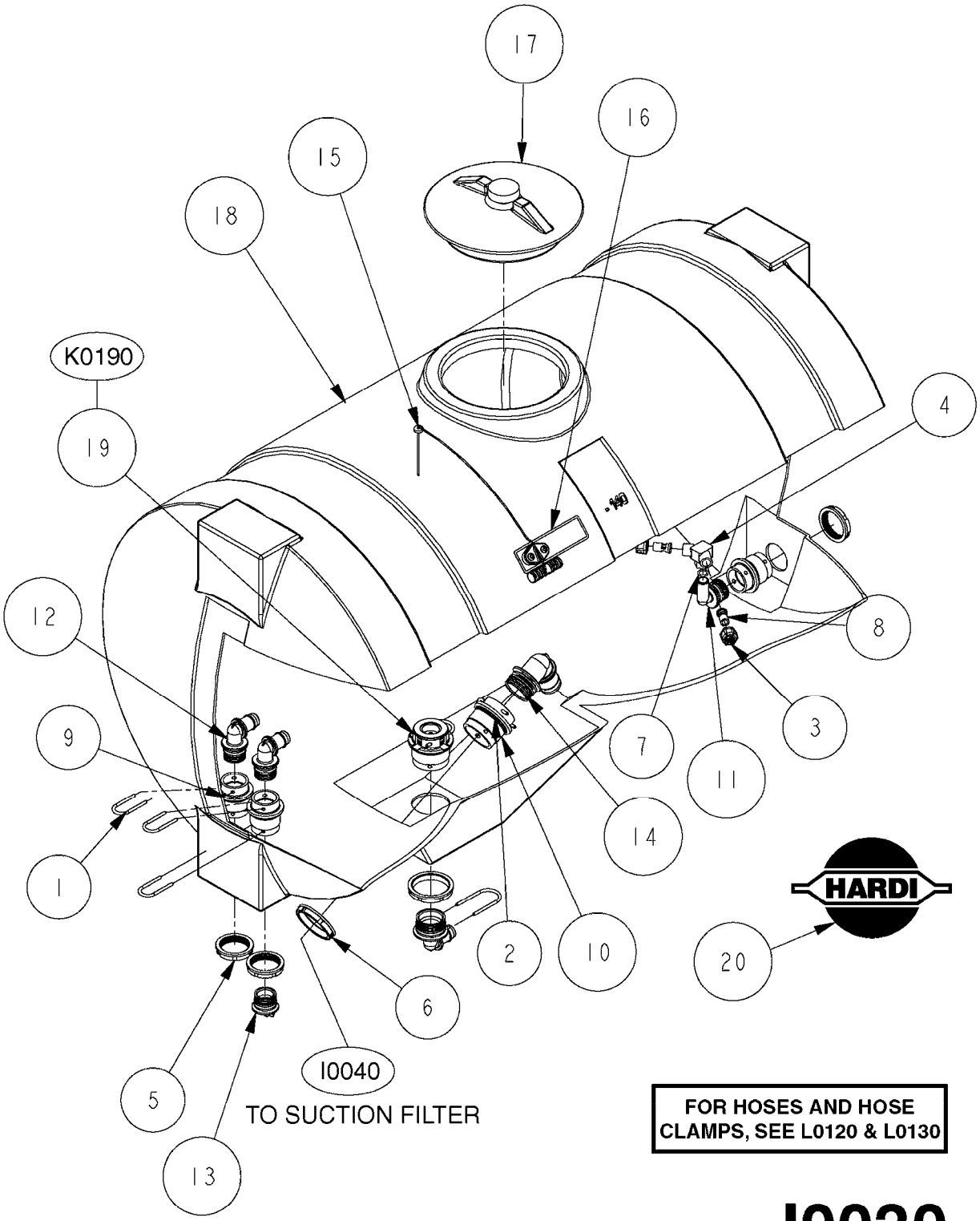

FOR HOSES AND HOSE CLAMPS, SEE L0120 & L0130

I0030

Agroparts: www.HARDI-INTERNATIONAL.com

ATV 150 TANK
I0030-HIN, 01:01:16

Date 12.08.2020 11:41

Pos.	parts-nº	order qty	description
1	145995	1	FITT.DK S-53 FORK
2	145996	1	FITT.DK S-67 FORK
3	320084	1	FITT.DK NUT 1/2" BSP
4	320563	1	FITT.DK 3 WAY 1/2" 110 DEG.
5	322107	1	FITT.DK S-53 BULKHEAD NUT
6	322108	1	FITT.DK S-67 BULKHEAD NUT
7	330212	1	O-RING D19/D14X2.4 F.1/2"NUT
8	370462	1	NOZZLE INJECTOR 5066-1.5
9	726463	1	FITT.DK S53 BULKHEAD W/GASKET
10	726464	1	FITT.DK S-67 BULKHEAD W/GASKET
11	726552	1	FIT.DK S-53X90 1/2" BSP,O-RING
12	726571	1	FITT.DK S-53 ELB.1", W ORING
13	726578	1	FITT.DK S53 PLUG WITH O-RING
14	727224	1	FITT.DK S67X90,1.5HB SUCTION
15	14001500	1	GROMMET F.TOP DRAIN CORD
16	10532903	1	DECAL CAUTION-TANK DRAIN ENG
17	28033603	1	TANK LID & LID RING ATV
18	35003203	1	TANK, DRILLED, ATV 150
19	72351400	1	DRAIN,S67 TOP
20	976183	1	DECAL COMPANY D.18,2 X 29,6

ATV 150 SUCTION FITTINGS
I0040-HIN, 01:01:16

Date 12.08.2020 11:41

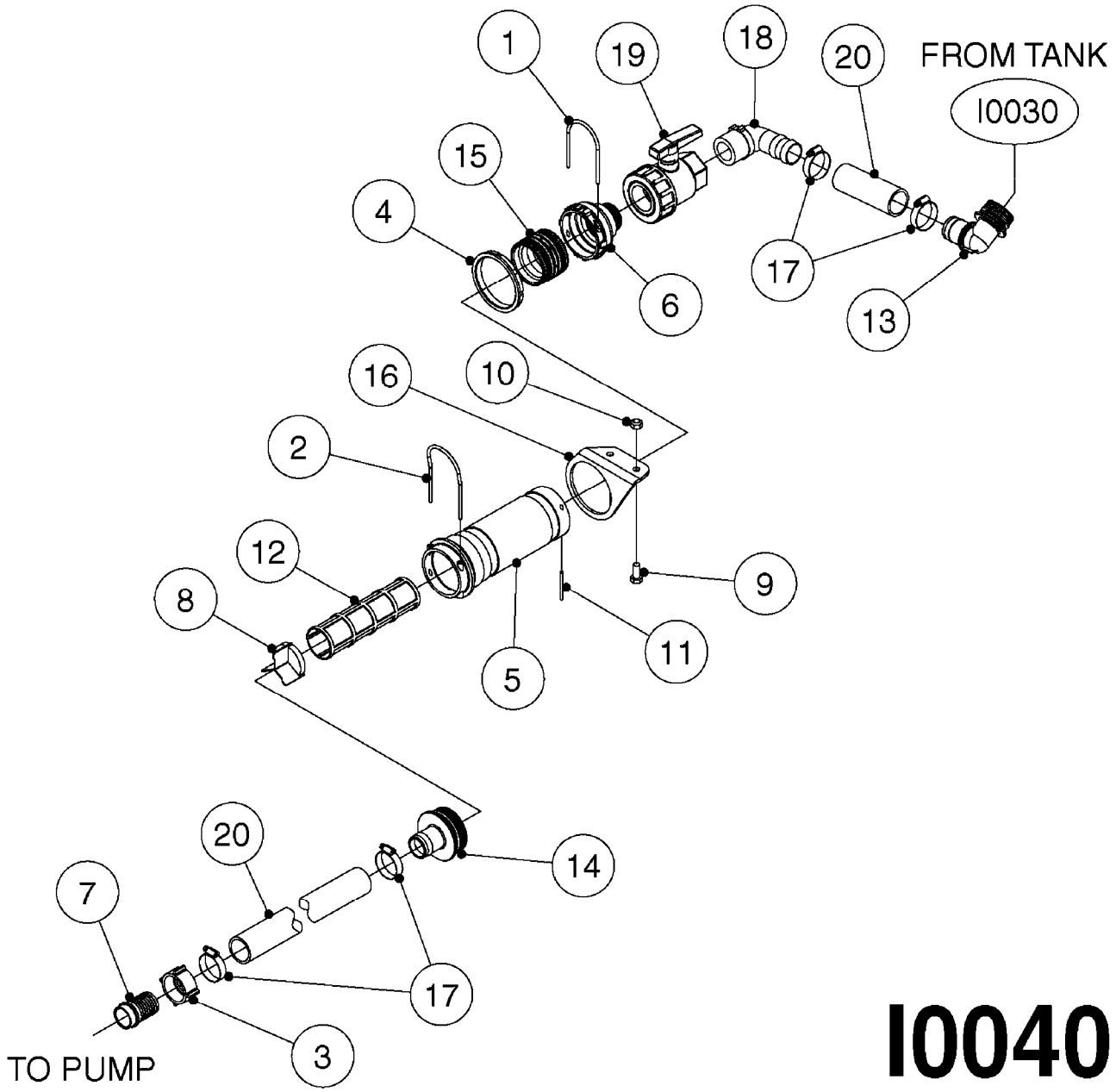

I0040

Agroparts: www.HARDI-INTERNATIONAL.com

ATV 150 SUCTION FITTINGS
I0040-HIN, 01:01:16

Date 12.08.2020 11:41

Pos.	parts-n°	order qty	description
1	145997	1	FITT.DK S-93 FORK
2	147115	1	FITT.DK S-93 FORK SPECIAL
3	320821	1	FITT.DK NUT 1-1/2" BSP
4	322109	1	FITT.DK S-93 BULKHEAD NUT
5	322227	1	HOUSING F.FILTER S-93 2"
6	322323	1	FITT.DK S-93 X 1-1/2"BSP MALE
7	331262	1	FITT.DK HB 1-1/2" F. 1-1/2"NUT
8	334605	1	VANE F.TOP SUCTION FILTER
9	420604	1	BOLT HEX 8.8 DEL M10X25 FT DIN933
10	460423	1	NUT HEX M10X1.50 LOCK DIN985A2 SS
11	480779	1	PIN D5X55 SPLIT
12	615415	1	FILTER ELEM.S93,30 MESH-GREEN STANDARD
12	615416	1	FILTER ELEM.S93,50 MESH-BLUE OPTIONAL
13	727224	1	FITT.DK S67X90,1.5HB SUCTION OPTIONAL
14	728523	1	FITT.DK S-93 STR.1-1/2" W.O-RING
15	728525	1	FITT. S93 CONNECTOR W/O-RINGS
16	16029503	1	PLATE 5.0X114X160/BOW/HOLE D94
17	28030103	1	CLAMP HOSE GEAR P5/4-S1.5"6724
18	28032403	1	FITTING 1.5" NPTX1.5"BARB/90°
19	29002103	1	BALL VALVE 1-1/2" BANJO
20	92702603	1	HOSE PVC SUCT GRAY 1-1/2"

ATV 150 FRAME
I0050-HIN, 01:01:16

Date 12.08.2020 11:41

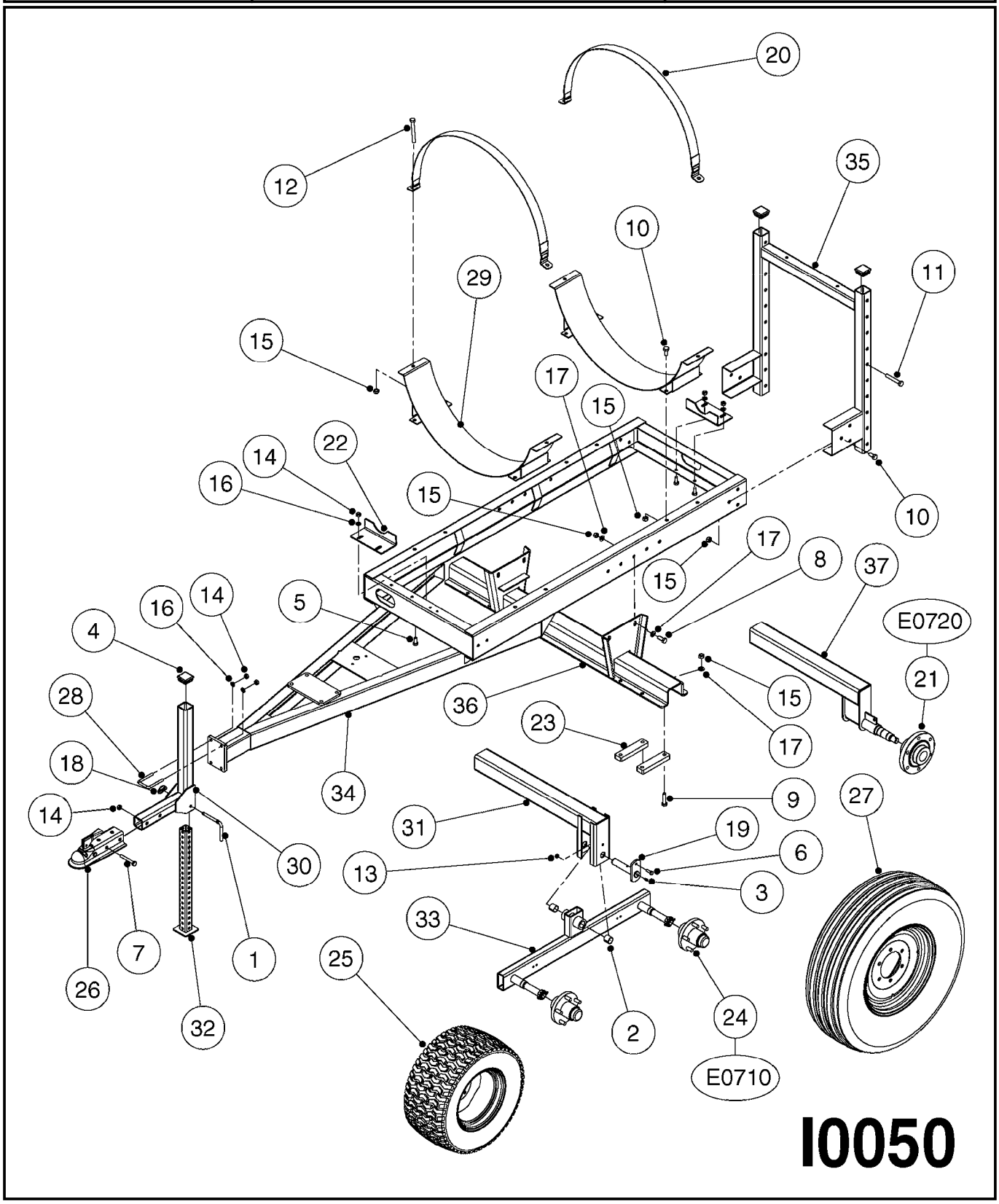

Agroparts: www.HARDI-INTERNATIONAL.com

ATV 150 FRAME
I0050-HIN, 01:01:16

Date 12.08.2020 11:41

Pos.	parts-n°	order qty	description
1	144642	1	LOCKING PAWL D10X65MM
2	210835	1	BUSHING D28/25 L=25
3	283699	1	GREASE NIPPLE M6X1
4	334561	1	PLUG 50x50x2 F.SQ.TUBE
5	420604	1	BOLT HEX 8.8 DEL M10X25 FT DIN933
6	421046	1	BOLT HEX M8X25/25 A2 SS DIN933
7	421222	1	BOLT HEX 8.8 DEL M10X75 FT
8	430286	1	BOLT HEX 8.8 DEL M12X30 FT
9	430404	1	BOLT HEX 8.8 DEL M12X50
10	430522	1	BOLT HEX 8.8 DEL M12X25 FT
11	430846	1	BOLT HEX 8.8 DEL M12X80
12	430872	1	BOLT HEX 8.8 DEL M12X100 FT
13	460143	1	LOCK NUT M8 SST A2 DIN985
14	460423	1	NUT HEX M10X1.50 LOCK DIN985A2 SS
15	460703	1	NUT HEX M12X1.75 LOCK DIN985A2 SS
16	471122	1	WASHER, M10, Ø20/10.5X 2.0, SS
17	471127	1	WASHER, M12, Ø24/13X24X2.5 SS
18	480244	1	PIN SNAP D4.5
19	615654	1	PIN D25 X 123 F. PARALIFT
20	10483003	1	TANK STRAP, 50", 2X90°X13MM
21	10531803	1	HUB ASSY.COMP.F.1-3/4" SPINDLE
22	16100503	1	TANK STOP, ATV SPRAYER
23	17006903	1	FLATBAR 1.5x.75" L=160 2xØ13
24	28031503	1	HUB PKG.1.25"SPINDLE 5-4.5-2.5
25	28031603	1	TIRE ASSY, TURF 23/10.5-12 4PR
26	28032203	1	COUPLER, BALL 2" F. 2" TUBE
27	28033303	1	TIRE ASSY 9.5LX15 6 BOLT 6-PLY
28	42000003	1	BOLT U M10 2"x2"
29	61006503	1	TANK SADDLE, ATV 110/150
30	61006703	1	DRAWBAR ADAPTOR, ATV SPRAYER
31	61007303	1	TANDEM AXLE INSERT,ATV SPRAYER
32	61011003	1	JACK STAND, ATV SPRAYER
33	63015903	1	TANDEM BEAM, WITH SPINDLE, ATV
34	63016103	1	FRAME, ATV 150
35	63016303	1	BOOM SUP. FRAME, ATV SPRAYER
36	63016403	1	AXLE FRAME, ADJ. ATV SPRAYER
37	63026503	1	SINGLE AXLE INSERT ATV SPRAYER

	Agroparts: www.HARDI-INTERNATIONAL.com	
HARDI	BNL 50/80 TANK & FRAME I0060-HIN, 19:08:19	Page 0 Date 12.08.2020 11:41

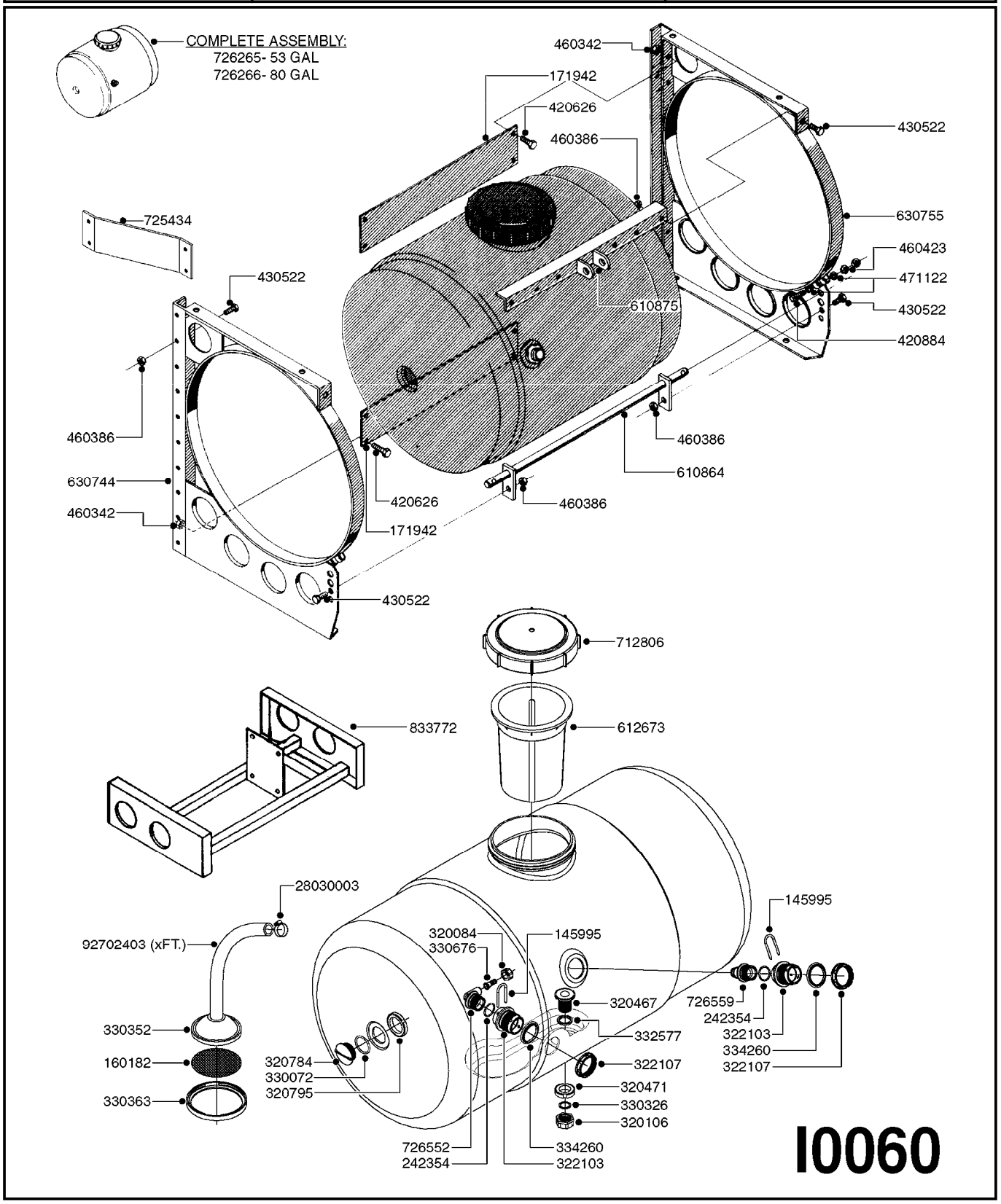

Agroparts: www.HARDI-INTERNATIONAL.com

BNL 50/80 TANK & FRAME
I0060-HIN, 19:08:19

Date 12.08.2020 11:41

parts-n°	order qty	description
145995	1	FITT.DK S-53 FORK
160182	1	FILTER SCREEN
171942	1	BL CROSS BRACE 110 X 5 X 565
242354	1	O-RING D32.2X3.0 VITON
320084	1	FITT.DK NUT 1/2" BSP
320106	1	FITT.DK CAPNUT 1" BSP
320467	1	FITT.DK BULKHEAD 1"BSP SINGLE
320471	1	FITT.DK NUT 1" BSP JAMB
320784	1	FITT.DK CAP 1-1/2" BSP
320795	1	FITT.DK NUT 1-1/2" BSP JAMB
322103	1	FITT.DK S-53 BULKHEAD
322107	1	FITT.DK S-53 BULKHEAD NUT
330072	1	O-RING D53.5/D45.5X4
330326	1	O-RING D30/D24X2 F.1"NUT
330352	1	FOAM DROP HOUSING
330363	1	RETAINER FILTER GAUGE
330676	1	FITT.DK HB 3/8" F. 1/2" NUT
332577	1	O-RING D38/D30X4 F.1" PUR.
334260	1	GASKET F. S-53 BULKHEAD
420626	1	BOLT HEX 8.8 DEL M10X20 FT
420884	1	BOLT HEX 8.8 DEL M10X80 FT
430522	1	BOLT HEX 8.8 DEL M12X25 FT
460342	1	NUT HEX M10 DEL DIN934
460386	1	NUT HEX M12X1.75
460423	1	NUT HEX M10X1.50 LOCK DIN985A2 SS
471122	1	WASHER, M10, Ø20/10.5X 2.0, SS
610864	1	SHAFT F.3PT HITCH BL53
610875	1	BRACKET TOP LINK BL25 FRAME
612673	1	FILTER BASKET F. ES30/ES53
630744	1	FRAME BL RIGHT
630755	1	FRAME BL LEFT
712806	1	TANK LID WITH VENT S226 RED
725434	1	MT.BKT./14'BOOM/BNL50
726265	1	TANK 53 GAL. F/BNL
726266	1	TANK W/O FRAME BL80
726552	1	FIT.DK S-53X90 1/2" BSP,O-RING
726559	1	FITT DK. S-53 HB 1" W/O-RING
833772	1	SUB FRAME FOR BNL53
28030003	1	CLAMP HOSE GEAR P1" 6716
92702403	1	HOSE PVC SUCT GRAY 1"

ES 30 TANK & FRAME
I0070-HIN, 01:01:16

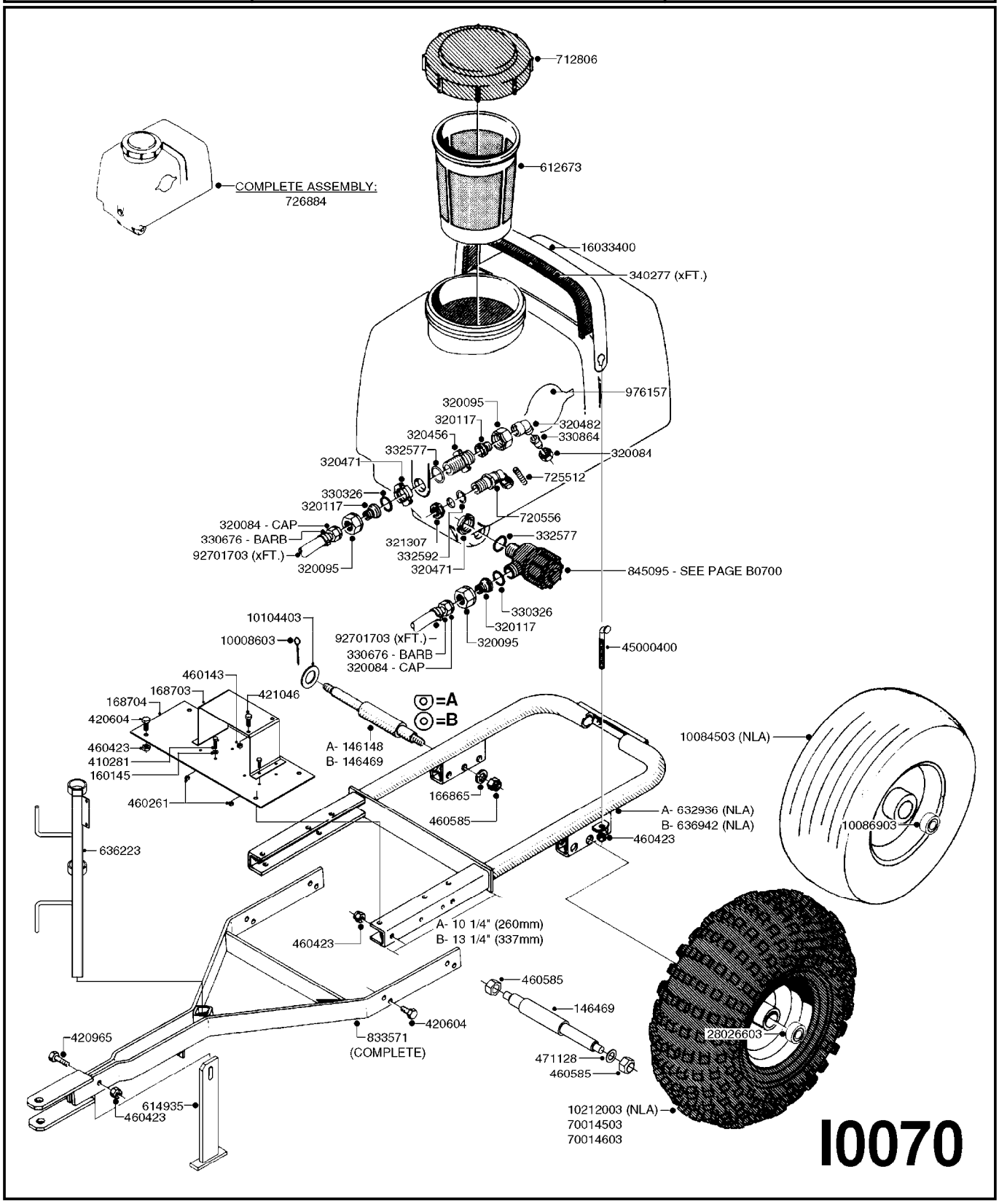

Agroparts: www.HARDI-INTERNATIONAL.com

ES 30 TANK & FRAME
I0070-HIN, 01:01:16

Date 12.08.2020 11:41

parts-n°	order qty	description
146148	1	SPINDLE TR30 STD.TIRE
146469	1	AXLE SHAFT ESTATE TRAILER SPRY
160145	1	WASHER D13.1/D6.4X1 SS
166865	1	WASHER D35/D25X2
168703	1	PUMP SCREEN FOR ATV
168704	1	PUMP BASE FOR ATV CAN 88
320084	1	FITT.DK NUT 1/2" BSP
320095	1	FITT.DK NUT 1" BSP
320117	1	FITT.DK CONN.1/2"BSP F. 1" CAP
320456	1	FITT.DK BULKHEAD 1"BSP DOUBLE
320471	1	FITT.DK NUT 1" BSP JAMB
320482	1	FITT.DK ELB. 1/2" BSP 60 DEG.
321307	1	FITT.DK NUT 1/2" BSP JAMB
330326	1	O-RING D30/D24X2 F.1"NUT
330676	1	FITT.DK HB 3/8" F. 1/2" NUT
330864	1	NOZZLE AGITATION D6
332577	1	O-RING D38/D30X4 F.1" PUR.
332592	1	O-RING D26/D20X3
340277	1	TANK PACKING - 40mm WIDE x 12"
410281	1	BOLT HEX 8.8 DEL M6X25 DIN933 A2
420604	1	BOLT HEX 8.8 DEL M10X25 FT DIN933
420965	1	M10X40 MACHINE SCREW STAINLESS
421046	1	BOLT HEX M8X25/25 A2 SS DIN933
460143	1	LOCK NUT M8 SST A2 DIN985
460261	1	NUT HEX M6X1.00 LOCK DIN985 A2 SS
460423	1	NUT HEX M10X1.50 LOCK DIN985A2 SS
460585	1	LOCKING NUT M16 DIN985 A2 SS
471128	1	WASHER, M16, Ø30/17.0X 3.0, SS
612673	1	FILTER BASKET F. ES30/ES53
614935	1	JACK STAND FOR ES30/53
632936	1	FRAME ES30
636223	1	POST 12 VOLT TR30
636942	1	FRAME FOR KS120
712806	1	TANK LID WITH VENT S226 RED
720556	1	SAFETY VALVE FOR ATV SPRAYER
725512	1	SPRING W/SEAT
726884	1	TANK 30 GAL. F/ES
833571	1	DRAW BAR FOR ES30/50/80
845095	1	FILTER COMPLETE
976157	1	DECAL COMPANY (4.4" X 4.6")
10008603	1	COTTER PIN 1/8"X 1-1/2"
10084503	1	TIRE & RIM 16 X 6.5 X 8
10086903	1	BEARING BALL F.ES53 WHEEL
10104403	1	WASHER PLATE 1'
10212003	1	TIRE & RIM ASSY.22 X 11.00-8
16033400	1	TANK STRAP ES30/NK 80 '01
28026603	1	BEARING P205PP SEALED 52x25x15
45000400	1	T-BOLT SPECIAL F.TANK STRAP ES
70014503	1	TIRE & RIM ASY 16X750-8 X 4"HU
70014603	1	TIRE & RIM ASY 20X10-8 X 4"HUB
92701703	1	HOSE R X3/8" X300PSI WP X0012"

ES 50/80 TANK
I0080-HIN, 15:11:17

Date 12.08.2020 11:41

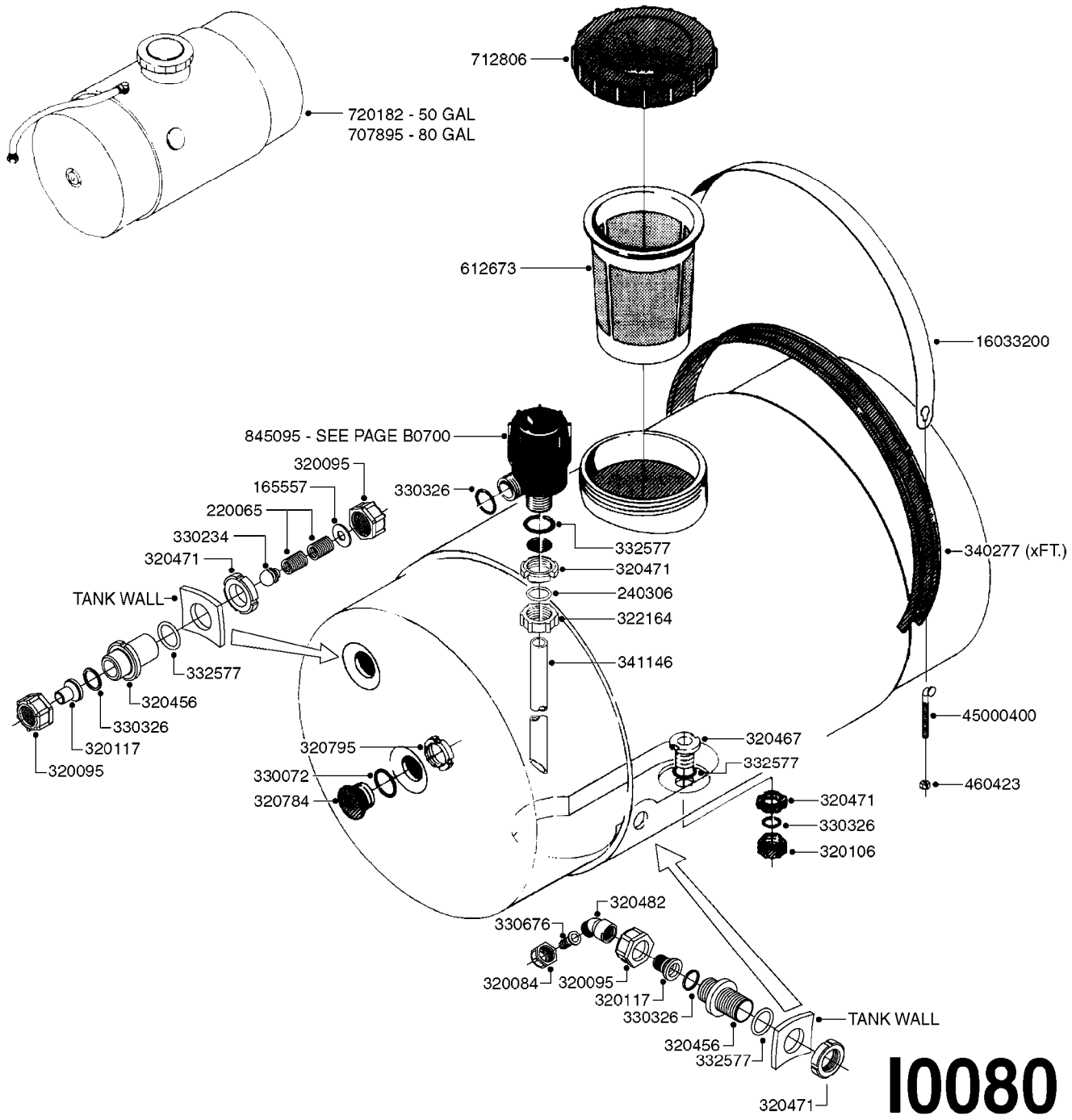

Agroparts: www.HARDI-INTERNATIONAL.com

ES 50/80 TANK
I0080-HIN, 15:11:17

Date 12.08.2020 11:41

parts-n°	order qty	description
165557	1	WASHER D28.0/D12.2X2.0 SS
220065	1	SPRING D19,7/41,2
240306	1	O-RING D29/D21X4
320084	1	FITT.DK NUT 1/2" BSP
320095	1	FITT.DK NUT 1" BSP
320106	1	FITT.DK CAPNUT 1" BSP
320117	1	FITT.DK CONN.1/2"BSP F. 1" CAP
320456	1	FITT.DK BULKHEAD 1"BSP DOUBLE
320467	1	FITT.DK BULKHEAD 1"BSP SINGLE
320471	1	FITT.DK NUT 1" BSP JAMB
320482	1	FITT.DK ELB. 1/2" BSP 60 DEG.
320784	1	FITT.DK CAP 1-1/2" BSP
320795	1	FITT.DK NUT 1-1/2" BSP JAMB
322164	1	FITT.DK CAP 1' SPECIAL
330072	1	O-RING D53.5/D45.5X4
330234	1	VALVE BALL D20
330326	1	O-RING D30/D24X2 F.1"NUT
330676	1	FITT.DK HB 3/8" F. 1/2" NUT
332577	1	O-RING D38/D30X4 F.1" PUR.
340277	1	TANK PACKING - 40mm WIDE x 12"
341146	1	SUCTION TUBE L=640MM/45DEG
460423	1	NUT HEX M10X1.50 LOCK DIN985A2 SS
612673	1	FILTER BASKET F. ES30/ES53
707895	1	TANK 80 GAL. ATV/CMS
712806	1	TANK LID WITH VENT S226 RED
720182	1	TANK 50 GAL. ES/SM
845095	1	FILTER COMPLETE
16033200	1	TANK STRAP L=1150MM
45000400	1	T-BOLT SPECIAL F.TANK STRAP ES

	Agroparts: www.HARDI-INTERNATIONAL.com	
HARDI	ES 50 FRAME I0090-HIN, 01:01:16	Page 0 Date 12.08.2020 11:41

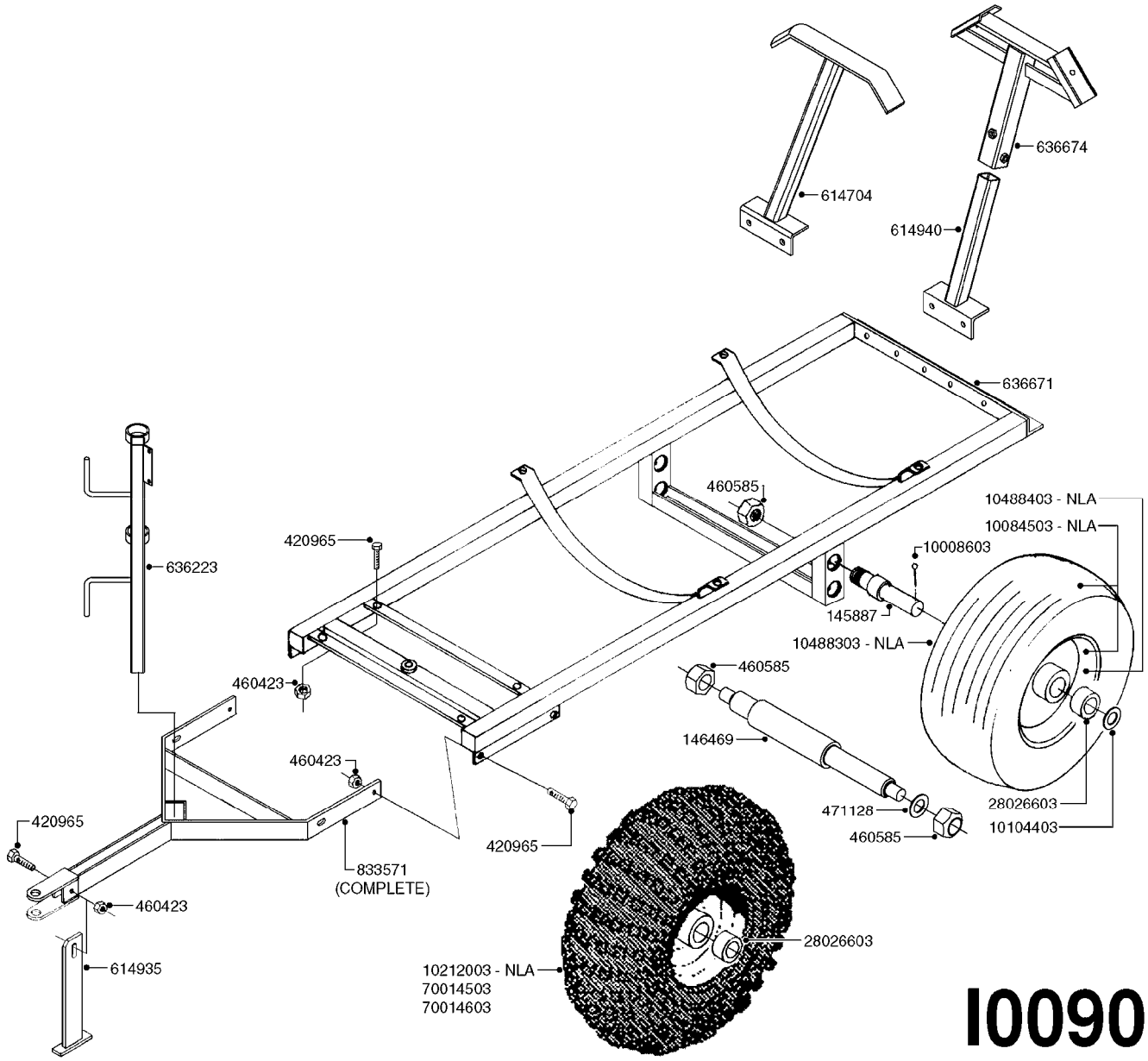

Agroparts: www.HARDI-INTERNATIONAL.com

ES 50 FRAME
I0090-HIN, 01:01:16

Date 12.08.2020 11:41

parts-n°	order qty	description
145887	1	AXLE SHAFT ES30/53
146469	1	AXLE SHAFT ESTATE TRAILER SPRY
420965	1	M10X40 MACHINE SCREW STAINLESS
460423	1	NUT HEX M10X1.50 LOCK DIN985A2 SS
460585	1	LOCKING NUT M16 DIN985 A2 SS
471128	1	WASHER, M16, Ø30/17.0X 3.0, SS
614704	1	UPRIGHT FOR ATV SPRAYER
614935	1	JACK STAND FOR ES30/53
614940	1	MNT.BRKT. F. 13'FD BOOM
636223	1	POST 12 VOLT TR30
636671	1	FRAME TR/ATV 53
636674	1	BOOM UPRIGHT FOR POWER SPRAYER
833571	1	DRAW BAR FOR ES30/50/80
10008603	1	COTTER PIN 1/8"X 1-1/2"
10084503	1	TIRE & RIM 16 X 6.5 X 8
10104403	1	WASHER PLATE 1'
10212003	1	TIRE & RIM ASSY.22 X 11.00-8
10488303	1	TIRE 16 X 650 X 8 2PLY
10488403	1	RIM 8 X 5.37 W. BEARINGS CREAM
28026603	1	BEARING P205PP SEALED 52x25x15
70014503	1	TIRE & RIM ASY 16X750-8 X 4"HU
70014603	1	TIRE & RIM ASY 20X10-8 X 4"HUB

RECEIVER HITCH 25 TANK & FRAME
I0100-HIN, 01:01:16

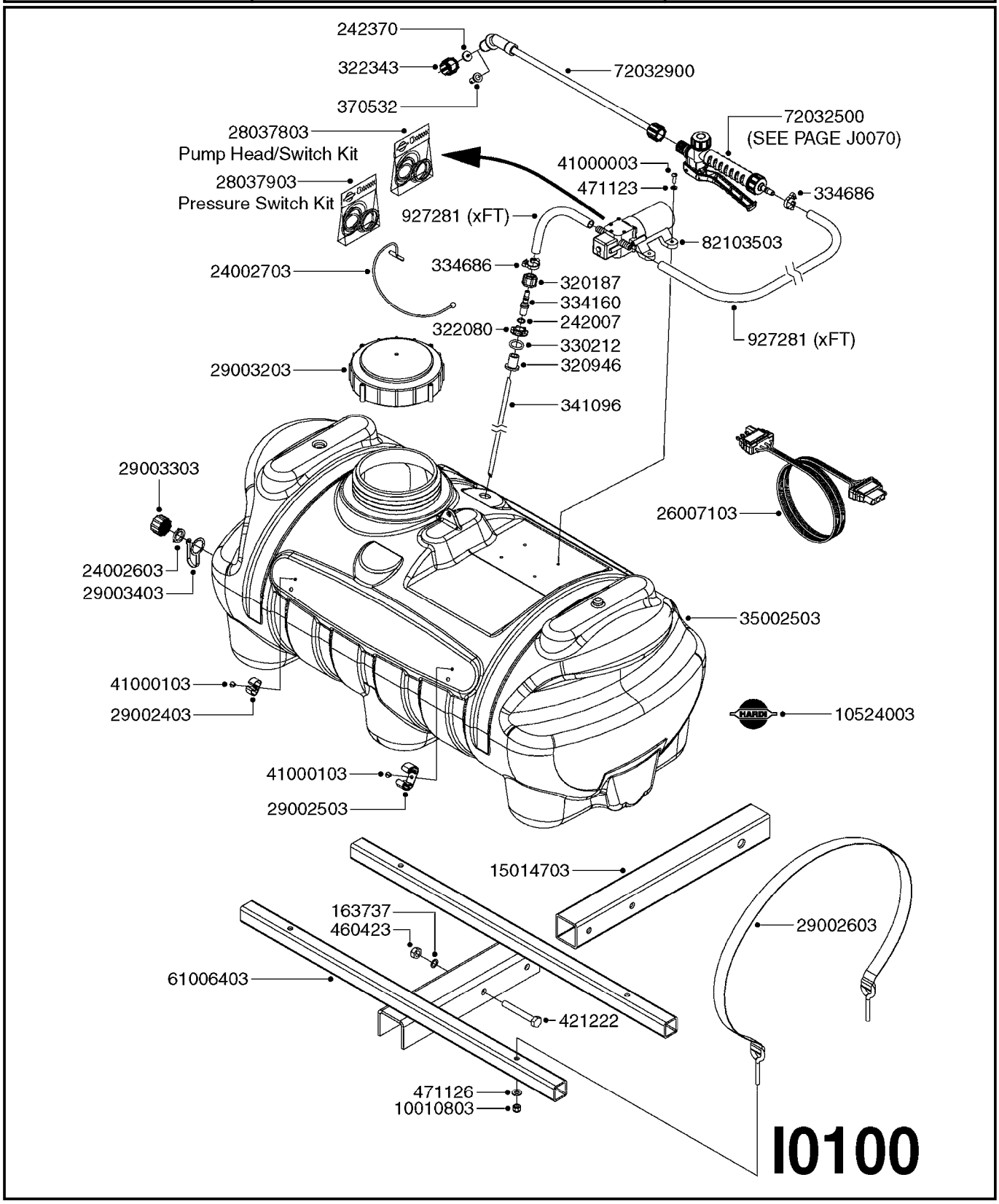

Agroparts: www.HARDI-INTERNATIONAL.com

RECEIVER HITCH 25 TANK & FRAME
I0100-HIN, 01:01:16

Date 12.08.2020 11:41

parts-n°	order qty	description
163737	1	WASHER D15.5/D10.5X1
242007	1	O-RING Ø9.1 X 1.6 NITRILE
242370	1	BACKING WASHER
320187	1	FITT.DK CAP 3/8" BSP BLACK
320946	1	FITT.DK BULKHEAD 3/8' BSP SING
322080	1	NUT 3/8' BSP (FINGER)
322343	1	NOZZLE CAP M18 X 1.5 - 1999
330212	1	O-RING D19/D14X2.4 F.1/2"NUT
334160	1	HOSE PIPE BRANCH 5/16'
334686	1	CLAMP HOSE PLASTIC 5/16'
341096	1	SUCTION HOSE D7 X 450 C5
370532	1	NOZZLE FLAT FAN 4625-36
421222	1	BOLT HEX 8.8 DEL M10X75 FT
460423	1	NUT HEX M10X1.50 LOCK DIN985A2 SS
471123	1	WASHER, M5, Ø10/ 5.3X 1.0, SS
471126	1	WASHER, M8, Ø16/ 8.4X 1.6, SS
927281	1	HOSE R X PVC X 5/16 X 0012"
10010803	1	NUT HEX NC (NYLON LOCK) 5/16
10524003	1	DECAL COMPANY 3.5"X2.7"
15014703	1	RECEIVER TUBE RECEIVER SPRAYER
24002603	1	OUTLET CAP GASKET, R.S.
24002703	1	TANK LID LANYARD, R.S.
26007103	1	WIRE EXTENSION 24" 4-POLE FLAT
28037803	1	PUMP HEAD/SWITCH KIT(82103503)
28037903	1	PRES.SWITCH KIT(82103503)35PSI
29002403	1	GRIPPER CLIP COATED 3/8"-5/8"
29002503	1	GRIPPER CLIP COATED 1"-1-1/2"
29002603	1	TANK STRAP RS 25 GAL 43.9"
29003203	1	TANK LID F.RECEIVER SPRAYER 5"
29003303	1	OUTLET CAP, BLACK R.S.
29003403	1	OUTLET CAP TETHER, R.S.
35002503	1	TANK SPOT SPRAYER 25 GAL
41000003	1	MACHINE SCREW #10-24x1/4" SS
41000103	1	MACHINE SCREW #10-24x5/8" SS
61006403	1	TANK FRAME RECEIVER SPRAYER
72032500	1	TRGGR VLV ASSY,NEW STYLE'00
72032900	1	PLASTIC WAND 20"
82103503	1	PUMP 1 GPM FLOJET LF172201D

SM 50/80 TANK & FRAME
I0110-HIN, 01:01:16

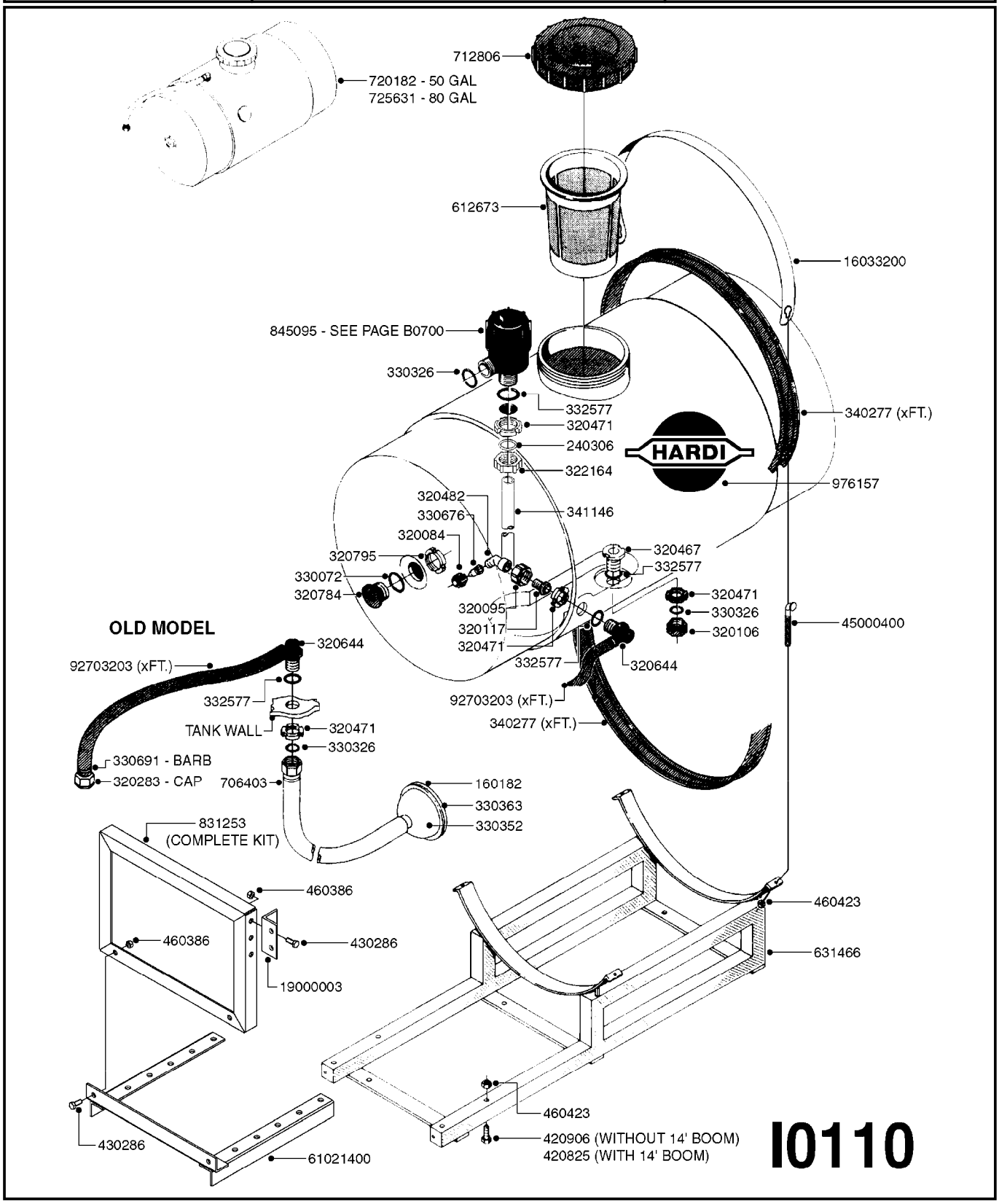

Agroparts: www.HARDI-INTERNATIONAL.com

SM 50/80 TANK & FRAME
I0110-HIN, 01:01:16

Date 12.08.2020 11:41

parts-n°	order qty	description
160182	1	FILTER SCREEN
240306	1	O-RING D29/D21X4
320084	1	FITT.DK NUT 1/2" BSP
320095	1	FITT.DK NUT 1" BSP
320106	1	FITT.DK CAPNUT 1" BSP
320117	1	FITT.DK CONN.1/2"BSP F. 1" CAP
320283	1	FITT.DK NUT 3/4"BSP
320467	1	FITT.DK BULKHEAD 1"BSP SINGLE
320471	1	FITT.DK NUT 1" BSP JAMB
320482	1	FITT.DK ELB. 1/2" BSP 60 DEG.
320644	1	FITT.DK ELB.3/4"HB X 1" BSP
320784	1	FITT.DK CAP 1-1/2" BSP
320795	1	FITT.DK NUT 1-1/2" BSP JAMB
322164	1	FITT.DK CAP 1' SPECIAL
330072	1	O-RING D53.5/D45.5X4
330326	1	O-RING D30/D24X2 F.1"NUT
330352	1	FOAM DROP HOUSING
330363	1	RETAINER FILTER GAUGE
330676	1	FITT.DK HB 3/8" F. 1/2" NUT
330691	1	FITT.DK HB 3/4'F.3/4' NUT
332577	1	O-RING D38/D30X4 F.1" PUR.
340277	1	TANK PACKING - 40mm WIDE x 12"
341146	1	SUCTION TUBE L=640MM/45DEG
420825	1	BOLT HEX 8.8 DEL M10X65
420906	1	BOLT HEX 8.8 DEL M10X60
430286	1	BOLT HEX 8.8 DEL M12X30 FT
460386	1	NUT HEX M12X1.75
460423	1	NUT HEX M10X1.50 LOCK DIN985A2 SS
612673	1	FILTER BASKET F. ES30/ES53
631466	1	FRAME F. SM53/80 SPRAYER
706403	1	HOSE ASSY. SUCTION F.ESTATE SP
712806	1	TANK LID WITH VENT S226 RED
720182	1	TANK 50 GAL. ES/SM
725631	1	TANK 80 GAL. SM
831253	1	REAR BOOM MT.FOR ATV/ES80
845095	1	FILTER COMPLETE
976157	1	DECAL COMPANY (4.4" X 4.6")
16033200	1	TANK STRAP L=1150MM
19000003	1	MOUNT ANGLE BRACKET ES50/80
45000400	1	T-BOLT SPECIAL F.TANK STRAP ES
61021400	1	BKT. BOOM MOUNT SM53/80 US
92703203	1	HOSE R X3/4" X300PSI WP X0012"

SM 210 TANK & FRAME
I0120-HIN, 01:01:16

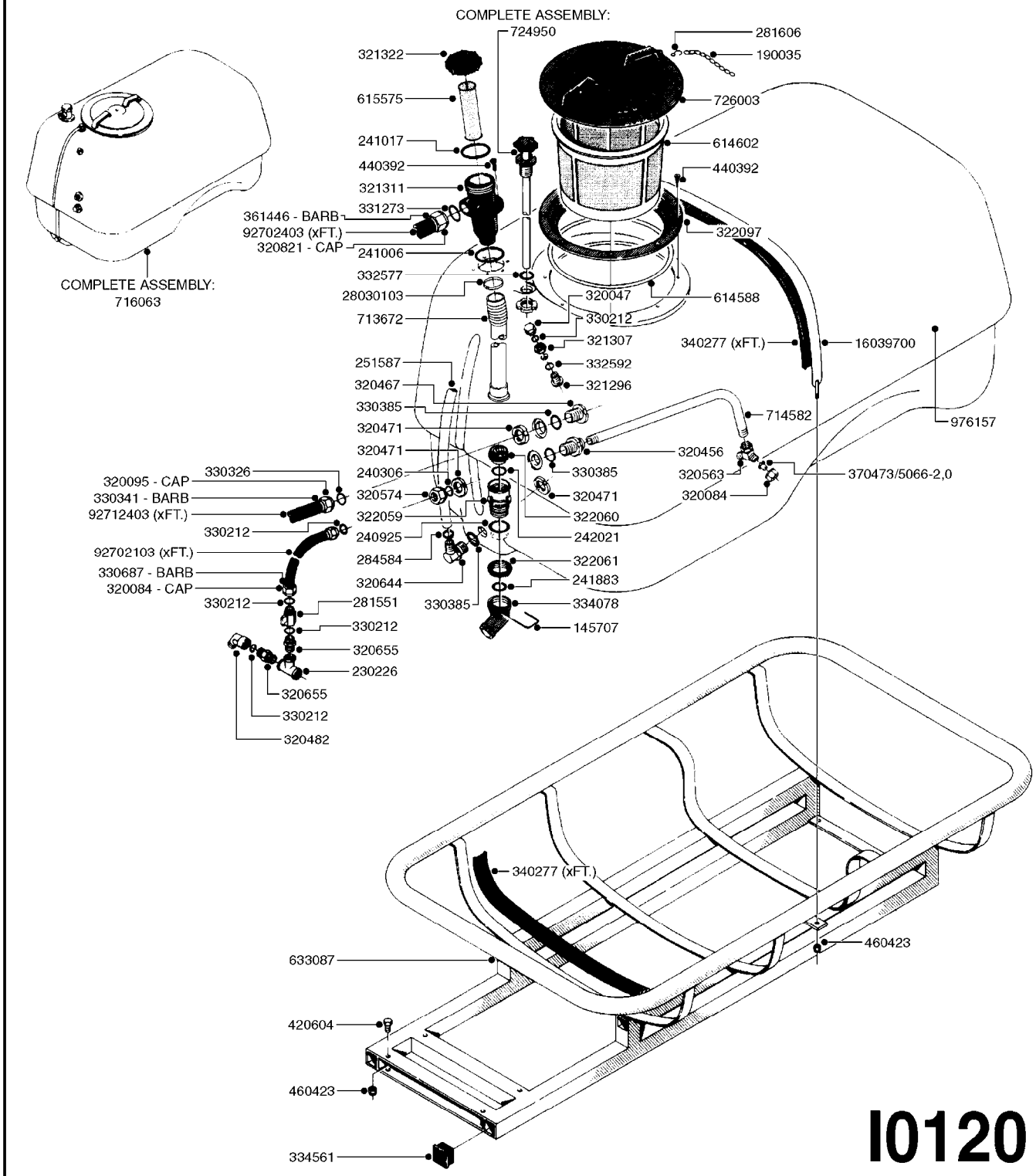

Agroparts: www.HARDI-INTERNATIONAL.com

SM 210 TANK & FRAME
I0120-HIN, 01:01:16

Date 12.08.2020 11:41

parts-n°	order qty	description
145707	1	LOCK CLAMP F.BOTTOM DRAIN ASSY
190035	1	CHAIN 365MM
230226	1	TEE PIECE 1/2'x1/2'x1/2' BSP
240306	1	O-RING D29/D21X4
240925	1	O-RING D49.5X3 NITRIL
241006	1	O-RING D79,2X5,7 NITRIL
241017	1	O-RING D74,5X3 NITRIL
241883	1	O-RING 3 X 39.2 NITRIL
242021	1	O-RING D.37,69x3,53 VITON
251587	1	LEVEL INDICATOR HOSE TR800
281551	1	BALL VALVE 1/2"
281606	1	S-HOOK GALVANIZED
284584	1	CLAMP HOSE GEAR 3/4" MINI 012
320047	1	FITT.DK CAPNUT 1/2" BSP
320084	1	FITT.DK NUT 1/2" BSP
320095	1	FITT.DK NUT 1" BSP
320456	1	FITT.DK BULKHEAD 1"BSP DOUBLE
320467	1	FITT.DK BULKHEAD 1"BSP SINGLE
320471	1	FITT.DK NUT 1" BSP JAMB
320482	1	FITT.DK ELB. 1/2" BSP 60 DEG.
320563	1	FITT.DK 3 WAY 1/2" 110 DEG.
320574	1	FITT.DK NUT 1" BSP SPECIAL
320644	1	FITT.DK ELB.3/4"HB X 1" BSP
320655	1	FITT.DK HN 1/2"-1/2" BSP
320821	1	FITT.DK NUT 1-1/2" BSP
321296	1	FITT.DK BULKHEAD 1/2" BSP SING
321307	1	FITT.DK NUT 1/2" BSP JAMB
321311	1	FILTER BODY S 80 X 4
321322	1	SCREW CAP F. S80 X 4
322059	1	BULKHEAD FOR BOTTOM VALVE
322060	1	STOPPER FOR BOTTOM VALVE
322061	1	NUT FOR BOTTOM VALVE
322097	1	THREADED RING F. LID
330212	1	O-RING D19/D14X2.4 F.1/2"NUT
330326	1	O-RING D30/D24X2 F.1"NUT
330341	1	FITT.DK HB 1" F. 1" NUT
330385	1	O-RING D38,8/32,8XD3
330687	1	FITT.DK HB 1/2" F. 1/2" NUT
331273	1	O-RING D44/D38X2 F.1-1/2"
331446	1	FITT.DK HB 1" F.1-1/2" NUT
332577	1	O-RING D38/D30X4 F.1" PUR.
332592	1	O-RING D26/D20X3
334078	1	FITT.DK ELB.F.BOTTOM DRAIN ASY
334561	1	PLUG 50x50x2 F.SQ.TUBE
340277	1	TANK PACKING - 40mm WIDE x 12"
370473	1	NOZZLE INJECTOR 5066-2.0
420604	1	BOLT HEX 8.8 DEL M10X25 FT DIN933
440392	1	SCREW 6.3 X 25.0 DIN7981C TORX
460423	1	NUT HEX M10X1.50 LOCK DIN985A2 SS
614588	1	SEAL F. LID
614602	1	FILTER BASKET
615575	1	FILTER F.TOP SUCT.30 MESH GRN.
633087	1	FRAME SM 210
713672	1	SUCTION TUBE L=44"
714582	1	CIRCULATER CPL. TRX 800-1000
716063	1	TANK SM210 W.OUT FRAME
724950	1	DRAIN HANDLE ASSY./SCREW TYPE
726003	1	LID F. TANK
976157	1	DECAL COMPANY (4.4" X 4.6")
16039700	1	TANK STRAP 40X2.0 L=1605
28030103	1	CLAMP HOSE GEAR P5/4-S1.5"6724

parts-n°	order qty	description
92702103	1	HOSE R X1/2" X300PSI WP X0012"
92702403	1	HOSE PVC SUCT GRAY 1"
92712403	1	HOSE R X1" X300PSI WP X0012"